DIST.	COUNTY	ROUTE	KILOMETER POST TOTAL PROJECT	SHEET NO.	TOTAL SHEETS
04	SF	80	13.2/13.9	941R2	1204

Caltrans Metric

George Baker
REGISTERED ENGINEER - CIVIL
12-6-04
PLANS APPROVAL DATE

REGISTERED PROFESSIONAL ENGINEER George S. Baker No. C 57112 Exp. 12/31/05 CIVIL STATE OF CALIFORNIA

The State of California or its officers or agents shall not be responsible for the accuracy or completeness of electronic copies of this plan sheet.

T.Y. LIN / MOFFATT & NICHOL
825 BATTERY STREET
SAN FRANCISCO, CA 94111

Caltrans now has a web site! To get to the web site, go to: http://www.dot.ca.gov

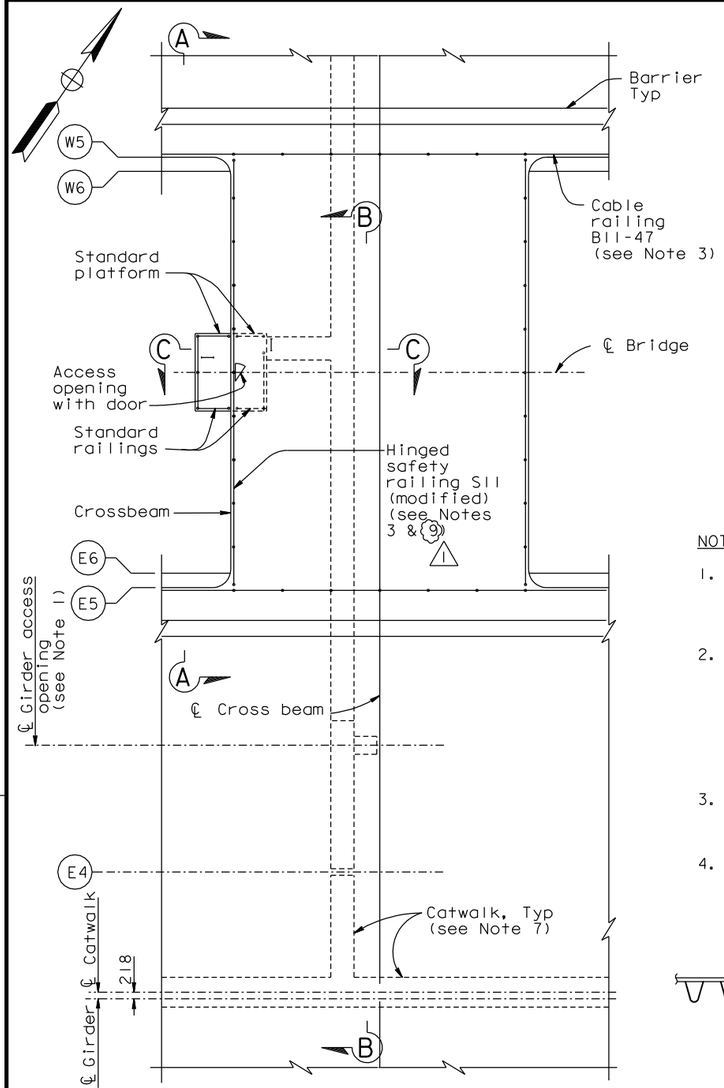

PLAN
1:100

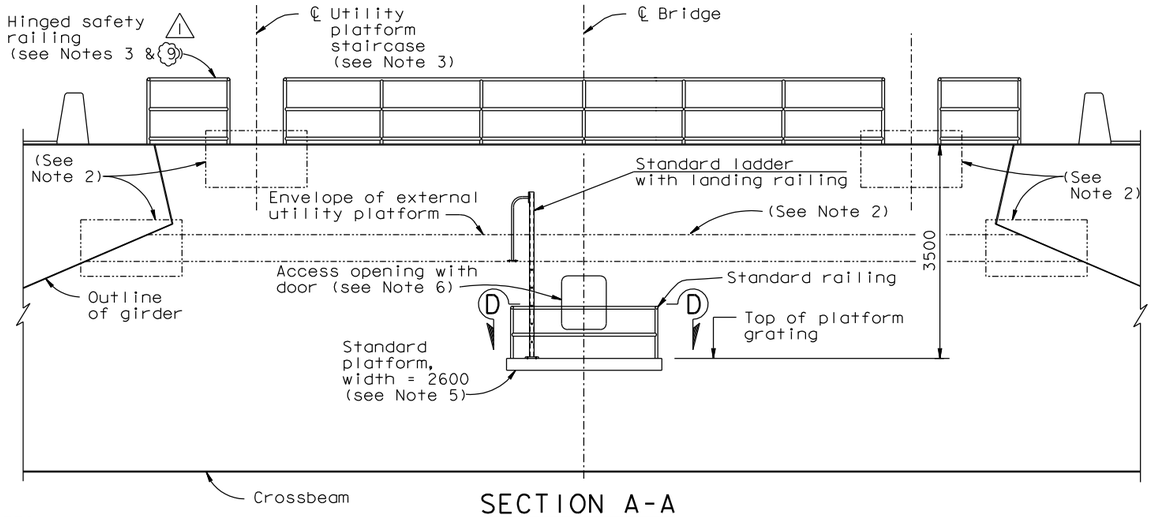

SECTION A-A
1:50

NOTES:

1. For girder access opening details, see "Typical Girder Details No.15" sheet. Provide grating with railing for 300 mm each side of opening.
2. All service platform, ladder, staircase and utility cabinet attachments to the crossbeams and girders shall conform to the fracture critical requirements of the specifications. No field welds will be permitted. All shop welded attachments shall be detailed with transition tapers as shown on "Typical Girder Details No.16" sheet.
3. Hinged safety railing shall be detailed with gaps to clear staircases. Cable railing shall be detailed with gaps to clear suspender brackets.
4. For utility layouts and service platform details, see "Road Plan" sheets.
5. For standard platform, ladder and railing details, see "Tower Access Details No.7", "Tower Access Details No.8" & "Tower Access Details No.10" sheets.
6. For exterior access opening in crossbeam, see "Typical Crossbeam Details No. 6" sheet. For door details, see Section D-D on "Girder Access Details No.8" sheet. Cowling shall be omitted.
7. For catwalk details, see "Girder Access Details No.2" sheet.
8. Channel 75 ladder rails shall be 500 mm back-to-back. Landing handrails shall be spaced at 500 mm clear or greater.
9. Crossbeam Cable Railing Alternate Plan may be used, see "Crossbeam Access Detail No.3A" sheet.

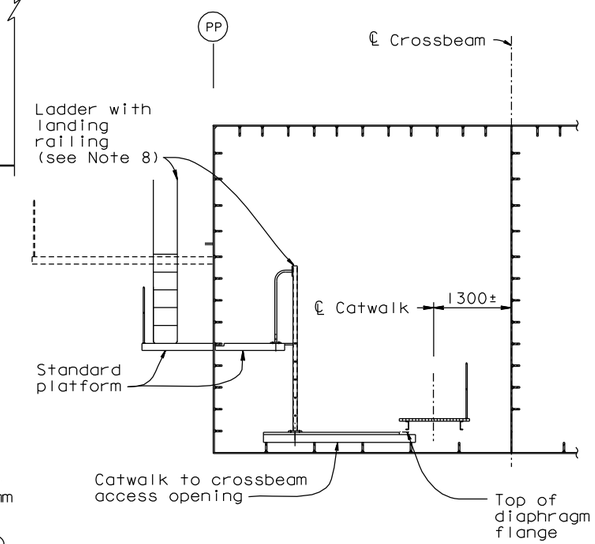

SECTION C-C
1:50

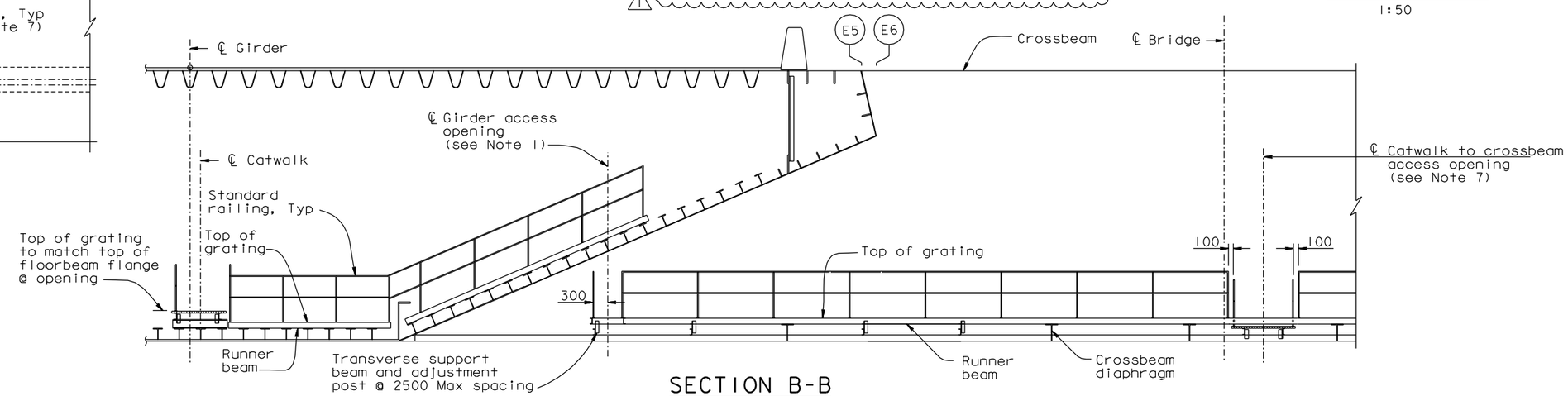

SECTION B-B
1:50

CATWALK TO CROSSBEAM

ACCESS OPENING LOCATIONS
PP
14
32
50
80
110

REGISTERED PROFESSIONAL ENGINEER Daniel J. Turner No. C 65033 Exp. 06/30/13 CIVIL STATE OF CALIFORNIA

FOR REVISIONS ONLY

CONTRACT CHANGE ORDER NO. ____
SHEET ___ OF ___

REQUESTS FOR INFORMATION NOT ADDRESSED IN THIS CCO REMAIN IN FORCE

ALL DIMENSIONS ARE IN MILLIMETERS UNLESS OTHERWISE SHOWN

R. Valizadeh/V. Toan/Y.L./W.L./F.C.
DESIGN OVERSIGHT
SIGN OFF DATE 11/08/11

MARK	DATE	DESCRIPTIONS	BY	CH'D	CCO#
2	11/08/11	CABLE RAILING	DT	GB	188
1	03/25/11	W2-OBG SAFETY CABLE	CC	DT	188

REVISIONS

	BY	CHECKED
DESIGN	G. Baker	T. McMeans
DETAILS	C. Mauch	T. McMeans
QUANTITIES	C. Mauch	J. Leventini

PREPARED FOR THE STATE OF CALIFORNIA DEPARTMENT OF TRANSPORTATION

R. Manzanarez
PROJECT ENGINEER

BRIDGE NO. 34-0006L/R
KILOMETER POST 13.2/13.9

SAN FRANCISCO OAKLAND BAY BRIDGE
EAST SPAN SEISMIC SAFETY PROJECT
SELF-ANCHORED SUSPENSION BRIDGE
(SUPERSTRUCTURE & TOWER)

GIRDER ACCESS DETAILS NO. 1

Rev. Date: 5-18-98

ORIGINAL SCALE IN MILLIMETERS FOR REDUCED PLANS 0 10 20 30 40 50 60 70 80 90 100

CU 04
EA 0120F1

DISREGARD PRINTS BEARING EARLIER REVISION DATES

REVISION DATES (PRELIMINARY STAGE ONLY) 05/15/99 08/02/99 05/31/01 04/08/02 07/01/02 12/19/02

SHEET 524R2 OF

FILE => I:\bb\04-012001\sas\contract plans and cco\cco\cco#188\3-revision 11-08-11\dgn\akaccl1a.dgn

100% PS&E

USERNAME => arivera DATE PLOTTED => 08 NOV 2011 TIME PLOTTED => 08:22:50