DIST.	COUNTY	ROUTE	KILOMETER POST TOTAL PROJECT	SHEET NO.	TOTAL SHEETS
04	SF	80	13.2/13.9	909S2R1	1204

REGISTERED ENGINEER - CIVIL

03-25-11

PLANS APPROVAL DATE

REGISTERED PROFESSIONAL ENGINEER James P. Duxbury No. C 64677 Exp. 06/30/13 CIVIL STATE OF CALIFORNIA

The State of California or its officers or agents shall not be responsible for the accuracy or completeness of electronic copies of this plan sheet.

T.Y. LIN / MOFFATT & NICHOL
825 BATTERY STREET
SAN FRANCISCO, CA 94111

Caltrans now has a web site! To get to the web site, go to: http://www.dot.ca.gov

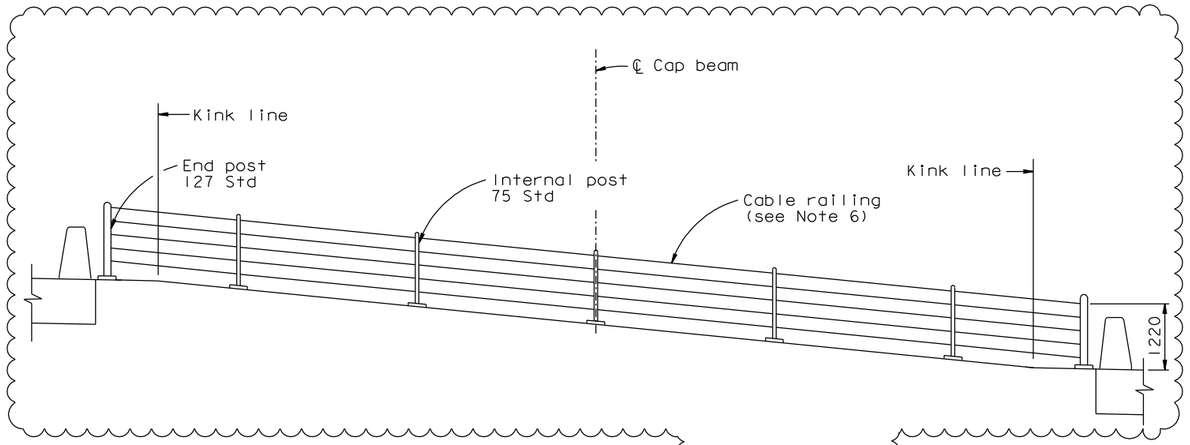

DETAIL A
1:50

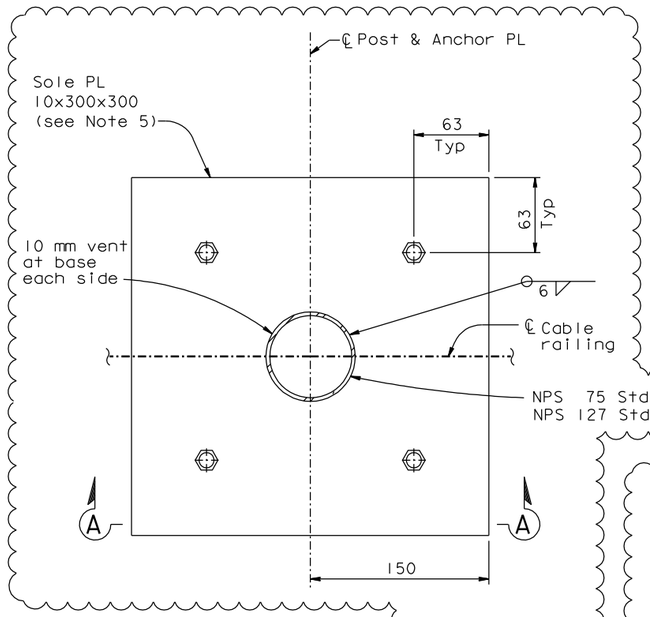

DETAIL B
1:2.5

(Detail B' Similar)

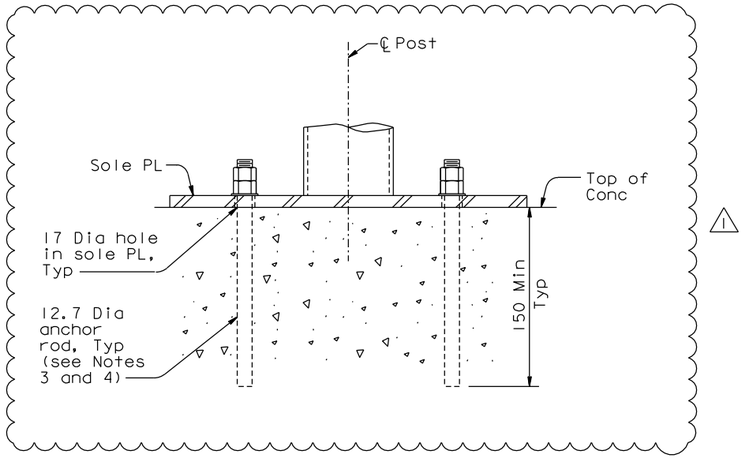

SECTION A-A
1:2.5

NOTES:

1. For layout of cable, see "Pier W2 Access Details No.2" sheet.
2. Sole plates and anchor plates shall have a minimum yield strength of Fy=50 ksi (345 MPa) and shall be A572 or equivalent.
3. Anchoring system shall be Hilti HIT-RE 500-SD Epoxy Adhesive Anchoring system with Hilti HAS-R 316 SS all threaded rod (Fu > 690 MPa), or equivalent.
4. Anchor rods and epoxy shall be installed per manufacturer's recommendations.
5. Assemblies, including underside of sole PL, shall be galvanized and painted.
6. The Pier W2 cable railing is similar to the typical crossbeam line cable railing. For details of railing posts, struts, cables and cable hardware, see "Typical Girder Details No.17A" sheet.

CONTRACT CHANGE ORDER NO. _____
SHEET ____ OF ____

REQUESTS FOR INFORMATION NOT ADDRESSED IN THIS CCO REMAIN IN FORCE

ALL DIMENSIONS ARE IN MILLIMETERS UNLESS OTHERWISE SHOWN

R. Valizadeh/V. Toan/Y.L./W.L./F.C.
DESIGN OVERSIGHT
SIGN OFF DATE 11/08/11

MARK	DATE	DESCRIPTIONS	BY	CH'D	CCO#
1	11/08/11	CABLE RAILING	DT	JD	188
0	03/25/11	W2-OBG SAFETY CABLE	CC	JD	188

REVISIONS

	BY	CHECKED
DESIGN	C. Choi	J. Duxbury
DETAILS	L. Motal	C. Choi
QUANTITIES	L. Motal	C. Choi

PREPARED FOR THE STATE OF CALIFORNIA DEPARTMENT OF TRANSPORTATION

R. Manzanarez
PROJECT ENGINEER

BRIDGE NO. 34-0006L/R
KILOMETER POST 13.2/13.9

SAN FRANCISCO OAKLAND BAY BRIDGE
EAST SPAN SEISMIC SAFETY PROJECT
SELF-ANCHORED SUSPENSION BRIDGE
(SUPERSTRUCTURE & TOWER)

PIER W2 ACCESS DETAILS NO.3

Rev. Date: 5-18-98

ORIGINAL SCALE IN MILLIMETERS FOR REDUCED PLANS 0 10 20 30 40 50 60 70 80 90 100

CU 04
EA 0120F1

DISREGARD PRINTS BEARING EARLIER REVISION DATES 03/25/11

REVISION DATES (PRELIMINARY STAGE ONLY)

SHEET 492S2R1 OF

FILE => I:\bb\04-012001\sas\contract plans and cco\cco\cco#188\3-revision 11-08-11\dgn\akacc01b.dgn

100% PS&E

USERNAME => arivera DATE PLOTTED => 08 NOV 2011 TIME PLOTTED => 08:22:13