DIST.	COUNTY	ROUTE	KILOMETER POST TOTAL PROJECT	SHEET NO.	TOTAL SHEETS
04	SF	80	13.2/13.9	636R3	1204

Caltrans Metric

George Baker
REGISTERED ENGINEER - CIVIL
12-6-04
PLANS APPROVAL DATE

REGISTERED PROFESSIONAL ENGINEER George S. Baker No. C57112 Exp. 12/31/05 CIVIL STATE OF CALIFORNIA

The State of California or its officers or agents shall not be responsible for the accuracy or completeness of electronic copies of this plan sheet.

T.Y. LIN / MOFFATT & NICHOL
825 BATTERY STREET
SAN FRANCISCO, CA 94111

Caltrans now has a web site! To get to the web site, go to: http://www.dot.ca.gov

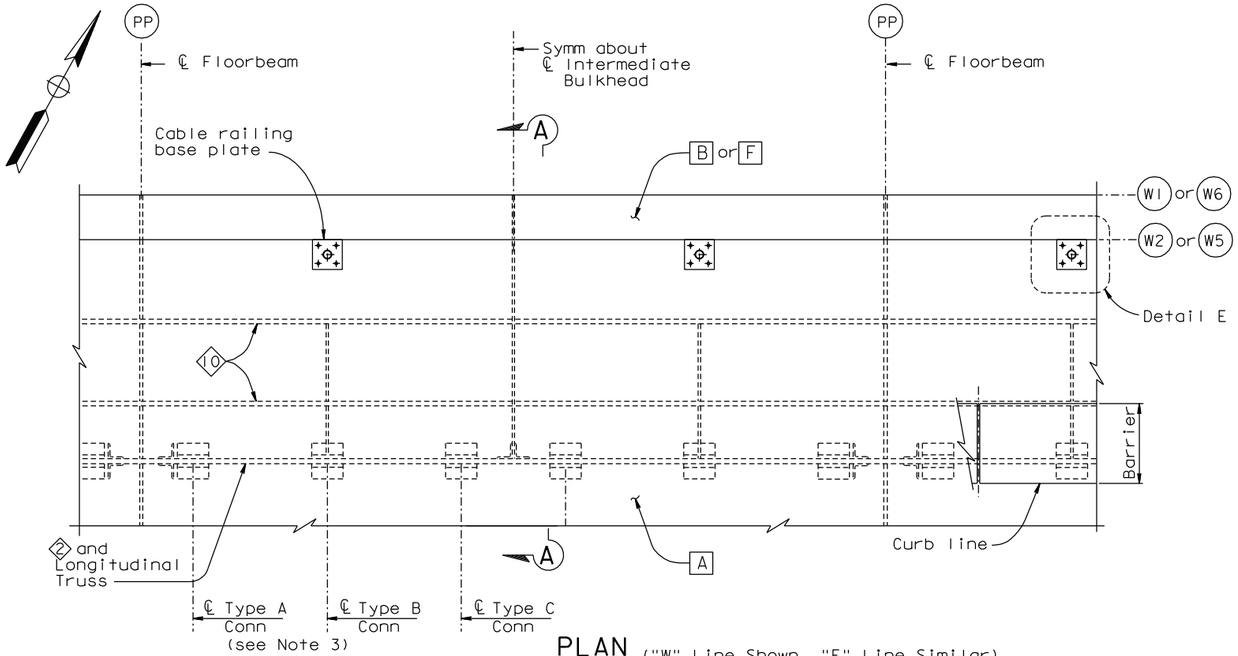

PLAN ("W" Line Shown, "E" Line Similar)
1:20

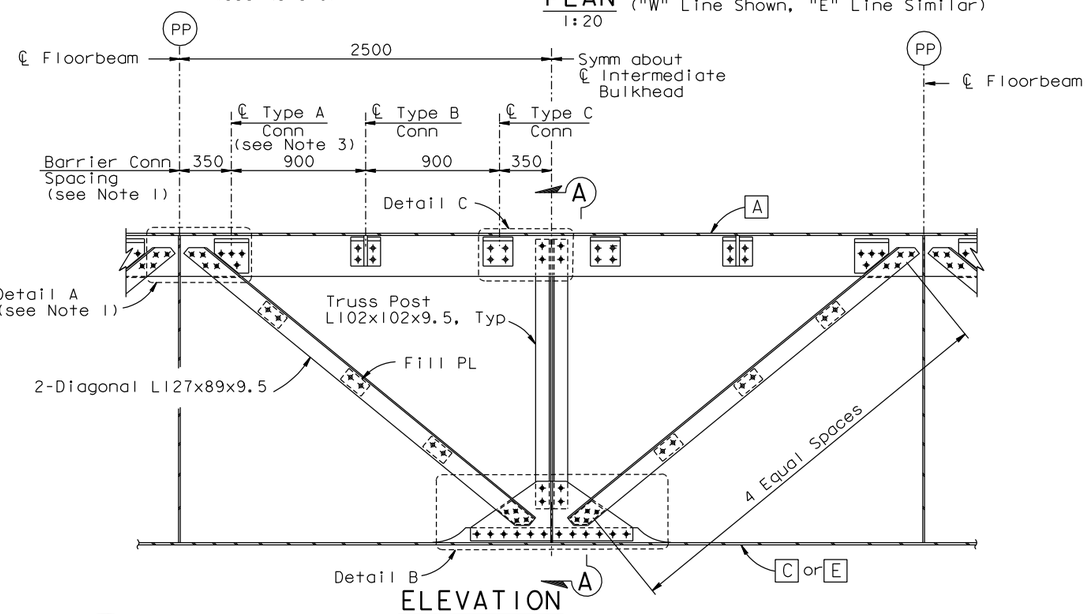

ELEVATION
LONGITUDINAL TRUSS ("W" Line Shown, "E" Line Similar)
1:20

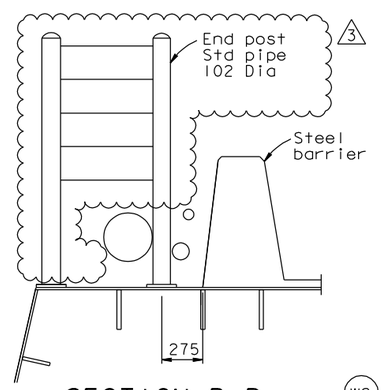

SECTION B-B
1:20

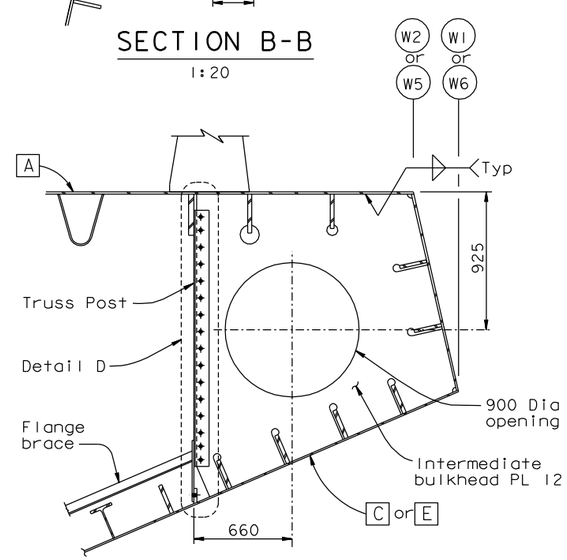

SECTION A-A
1:20

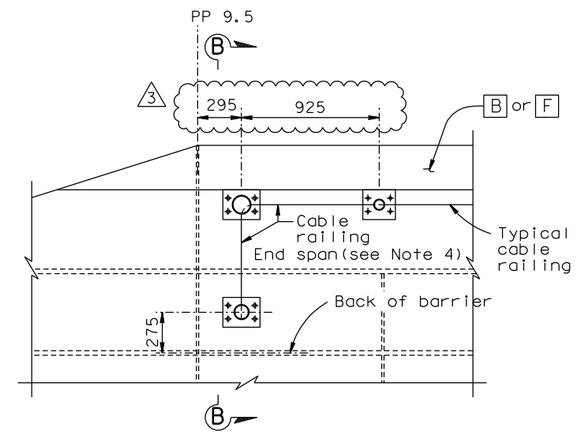

PLAN OF CABLE RAILING TERMINATION
1:20
(PP 9.5 shown, PP127 similar, PP40&44 W5 Line similar, "W" Line shown, "E" Line similar)

NOTES:

1. For barrier connection details, see "Typical Girder Details No.14" sheet.
2. For Details A, B, C, and D, see "Typical Girder Details No.13" sheet.
3. For locations without a longitudinal truss, barrier connection Type C shall be used in lieu of connection Type A.
4. For details not shown, see "Typical Girder Details No.17A, 17B and 17C" sheets.
5. (3) For Detail E, see "Typical Girder Details No.12A" sheet.
6. At the Contractor's option, a 8 mm fillet weld around the perimeter of the PL 20 may be used in lieu of 4 M20 bolts, subject to review and approval of the Engineer.

REGISTERED PROFESSIONAL ENGINEER Daniel J. Turner No. C 65033 Exp. 06/30/13 CIVIL STATE OF CALIFORNIA

FOR REVISIONS ONLY

CONTRACT CHANGE ORDER NO. ____
SHEET ___ OF ___

REQUESTS FOR INFORMATION NOT ADDRESSED IN THIS CCO REMAIN IN FORCE

MARK	DATE	DESCRIPTIONS	BY	CH'D	CCO#
3	11/16/11	CABLE RAILING	GB	DT	188
2	05/15/09	HANDRAIL	GB	DT	114
1	08/24/07	BARRIER MODIFICATIONS	GB	DT	44

REVISIONS

R. Valizadeh/V. Toan/Y.L./W.L./F.C.
DESIGN OVERSIGHT
SIGN OFF DATE 11/16/11

Rev. Date: 5-18-98

DESIGN	BY G. Baker	CHECKED P. Ritchie	
DETAILS	BY C. Mauch	CHECKED T. McMeans	
QUANTITIES	BY G. Baker	CHECKED M. Roberts	

PREPARED FOR THE STATE OF CALIFORNIA DEPARTMENT OF TRANSPORTATION

R. Manzanarez
PROJECT ENGINEER

BRIDGE NO. 34-0006L/R
KILOMETER POST 13.2/13.9

ALL DIMENSIONS ARE IN MILLIMETERS UNLESS OTHERWISE SHOWN

SAN FRANCISCO OAKLAND BAY BRIDGE
EAST SPAN SEISMIC SAFETY PROJECT
SELF-ANCHORED SUSPENSION BRIDGE
(SUPERSTRUCTURE & TOWER)

TYPICAL GIRDER DETAILS NO. 12

ORIGINAL SCALE IN MILLIMETERS FOR REDUCED PLANS 0 10 20 30 40 50 60 70 80 90 100

CU 04
EA 0120F1

DISREGARD PRINTS BEARING EARLIER REVISION DATES

REVISION DATES (PRELIMINARY STAGE ONLY): 05/15/99 08/02/99 05/31/01 04/08/02 07/24/02 12/19/02

SHEET 219R3 OF

FILE => L:\BB\04-012001\SAS\Contract Plans and CCO\CCO\CCO#188\4-Update 11-16-11\DGN\agdkd06b.dgn

100 % PS&E

USERNAME => orivera DATE PLOTTED => 15 NOV 2011 TIME PLOTTED => 14:26:27