DIST.	COUNTY	ROUTE	KILOMETER POST TOTAL PROJECT	SHEET NO.	TOTAL SHEETS
04	SF	80	13.2/13.9	614R2	1204

Caltrans Metric

George Baker
REGISTERED ENGINEER - CIVIL
1-27-03
PLANS APPROVAL DATE

REGISTERED PROFESSIONAL ENGINEER George S. Baker No. C 57112 Exp. 12/31/05 CIVIL STATE OF CALIFORNIA

The State of California or its officers or agents shall not be responsible for the accuracy or completeness of electronic copies of this plan sheet.

T.Y. LIN / MOFFATT & NICHOL
825 BATTERY STREET
SAN FRANCISCO, CA 94111

Caltrans now has a web site! To get to the web site, go to: http://www.dot.ca.gov

LOCATION TABLE		
Section Type	Longitudinal Shear PL Type	PP (Panel Point)
1A	1	15 To 40
	1	44 To 111
1B	1	40 To 44

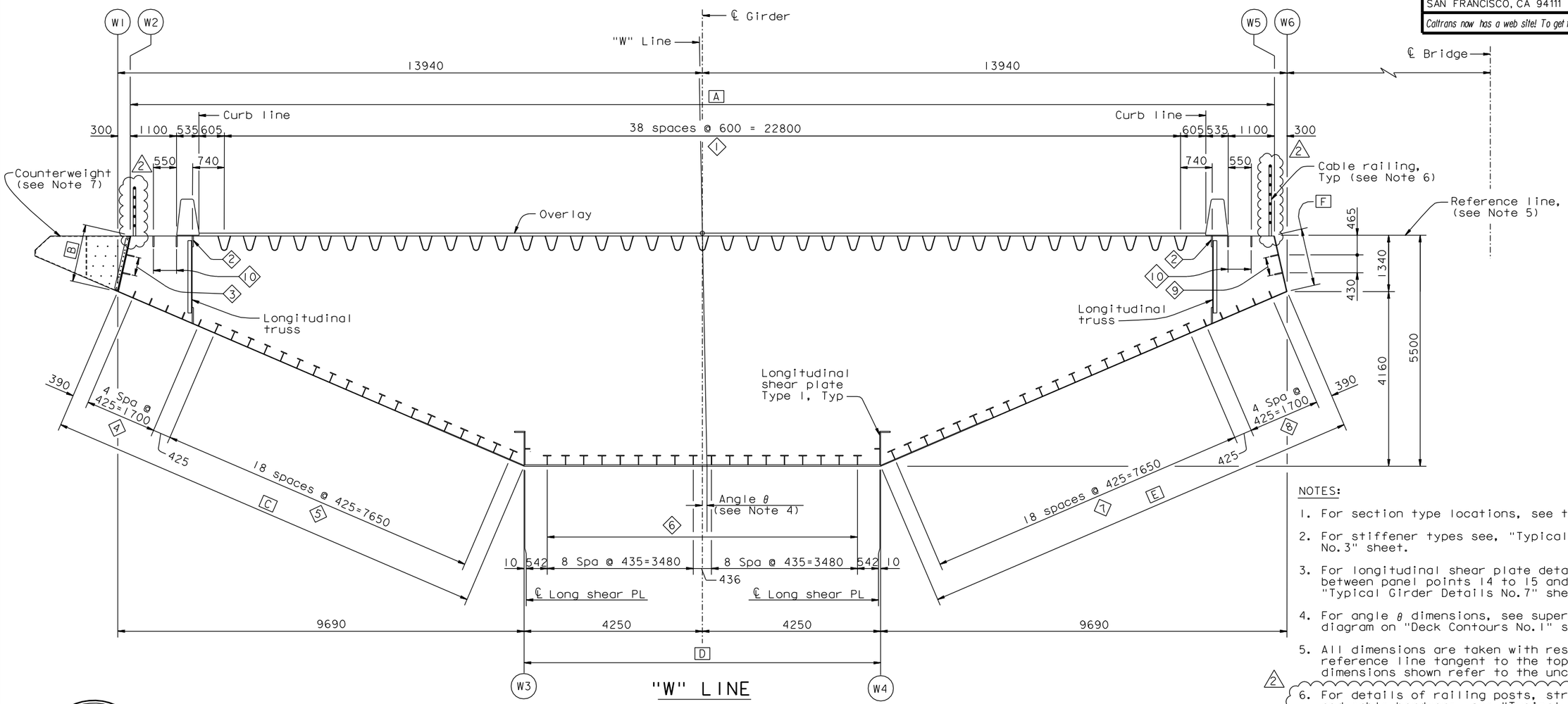

"W" LINE

SECTION TYPE 1A

1:50

NOTES:

1. For section type locations, see table this sheet.
2. For stiffener types see, "Typical Girder Details No. 3" sheet.
3. For longitudinal shear plate details at transition between panel points 14 to 15 and 111 to 112, see "Typical Girder Details No. 7" sheet.
4. For angle θ dimensions, see superelevation diagram on "Deck Contours No. 1" sheet.
5. All dimensions are taken with respect to a reference line tangent to the top deck plate. All dimensions shown refer to the uncambered bridge.
6. For details of railing posts, struts, cables and and cable hardware, see "Typical Girder Details No. 17A, 17B and 17C" sheets. For base details, see "Typical Girder Details No. 12" sheet.
7. For counterweight details, see "Typical Girder Details No. 17" sheet.
8. For longitudinal truss, see "Typical Girder Details No. 12" sheet.

REGISTERED PROFESSIONAL ENGINEER Tien Hung Ho No. C 43990 Exp. 06/30/13 CIVIL STATE OF CALIFORNIA

FOR REVISIONS ONLY

CONTRACT CHANGE ORDER NO. _____
SHEET ____ OF ____

REQUESTS FOR INFORMATION NOT ADDRESSED IN THIS CCO REMAIN IN FORCE

ALL DIMENSIONS ARE IN MILLIMETERS UNLESS OTHERWISE SHOWN

R. Valizadeh/V. Toan/Y.L./W.L./F.C.
DESIGN OVERSIGHT
Reza Valizadeh / Vong Toan / Y. Liu
SIGN OFF DATE 11/08/11

MARK	DATE	DESCRIPTIONS	BY	CH'D	CCO#
2	11/08/11	CABLE RAILING	DT	TH	188
1	05/15/09	HANDRAIL	GB	TH	114

REVISIONS

	BY	CHECKED
DESIGN	G. Baker	T. McMeans
DETAILS	M. Gulyas	T. McMeans
QUANTITIES	G. Baker	M. Roberts

PREPARED FOR THE STATE OF CALIFORNIA DEPARTMENT OF TRANSPORTATION

R. Manzanarez
PROJECT ENGINEER

BRIDGE NO. 34-0006L/R
KILOMETER POST 13.2/13.9

SAN FRANCISCO OAKLAND BAY BRIDGE
EAST SPAN SEISMIC SAFETY PROJECT
SELF-ANCHORED SUSPENSION BRIDGE
(SUPERSTRUCTURE & TOWER)

PARTIAL TYPICAL SECTION NO. 1

Rev. Date: 5-18-98

ORIGINAL SCALE IN MILLIMETERS FOR REDUCED PLANS 0 10 20 30 40 50 60 70 80 90 100

CU 04
EA 0120F1

DISREGARD PRINTS BEARING EARLIER REVISION DATES

REVISION DATES (PRELIMINARY STAGE ONLY) 01/15/99 05/15/99 08/06/99 05/17/01 04/08/02 07/01/02 12/19/02

SHEET 197R2 OF

FILE => I:\bb\04-012001\sas\contract plans and cco\cco\cco#188\3-revision 11-08-11\dgn\aftyp02.dgn

USERNAME => arivera DATE PLOTTED => 08 NOV 2011 TIME PLOTTED => 08:08:28

100% PS&E

DIST.	COUNTY	ROUTE	KILOMETER POST TOTAL PROJECT	SHEET NO.	TOTAL SHEETS
04	SF	80	13.2/13.9	615R2	1204

Caltrans Metric

George Baker
REGISTERED ENGINEER - CIVIL

1-27-03
PLANS APPROVAL DATE

REGISTERED PROFESSIONAL ENGINEER George S. Baker No. C 57112 Exp. 12/31/05 CIVIL STATE OF CALIFORNIA

The State of California or its officers or agents shall not be responsible for the accuracy or completeness of electronic copies of this plan sheet.

T.Y. LIN / MOFFATT & NICHOL
825 BATTERY STREET
SAN FRANCISCO, CA 94111

Caltrans now has a web site! To get to the web site, go to: http://www.dot.ca.gov

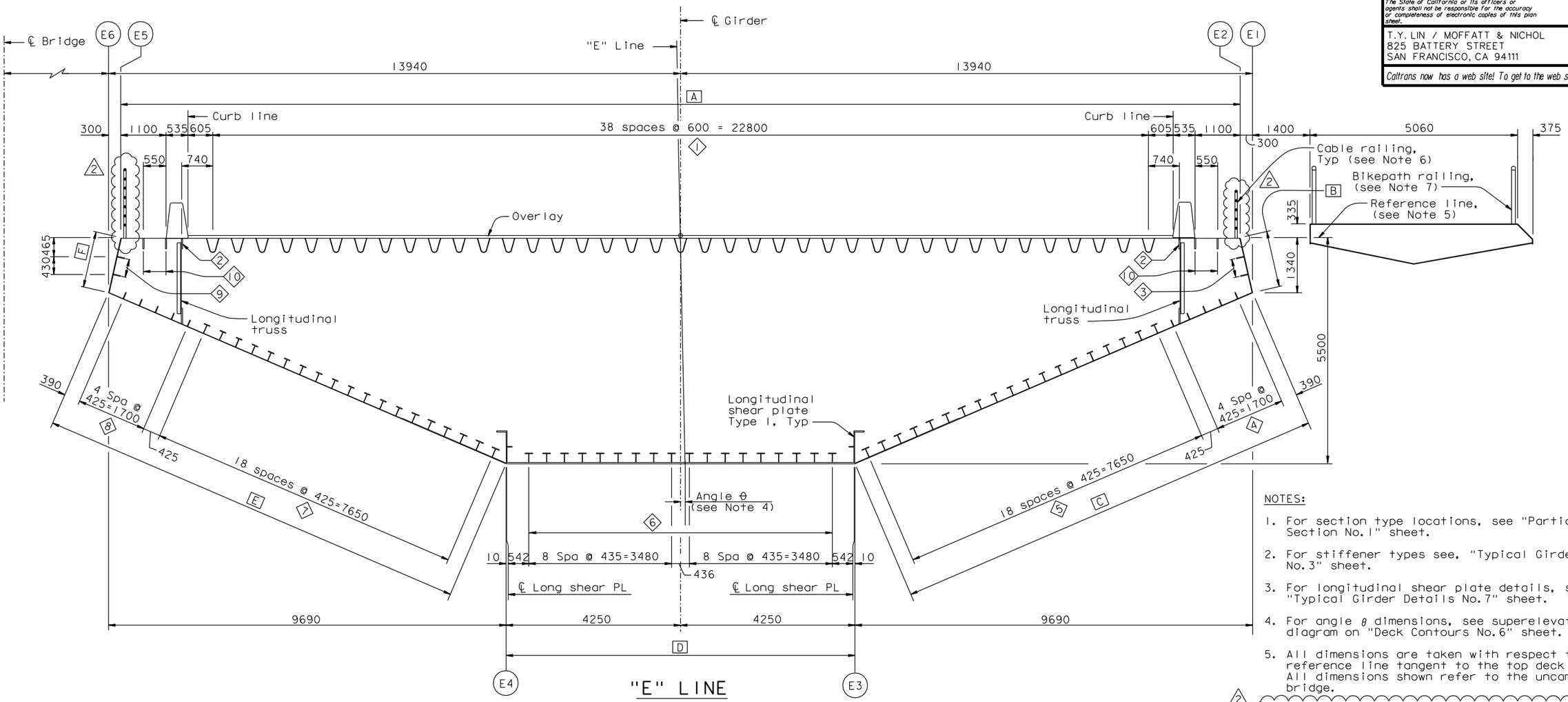

"E" LINE

SECTION TYPE 1A

1:50

NOTES:

1. For section type locations, see "Partial Typical Section No.1" sheet.
2. For stiffener types see, "Typical Girder Details No.3" sheet.
3. For longitudinal shear plate details, see "Typical Girder Details No.7" sheet.
4. For angle θ dimensions, see superelevation diagram on "Deck Contours No.6" sheet.
5. All dimensions are taken with respect to a reference line tangent to the top deck plate. All dimensions shown refer to the uncambered bridge.
6. For details of railing posts, struts, cables and cable hardware, see "Typical Girder Details No.17A, 17B and 17C" sheets. For base details, see "Typical Girder Details No.12" sheet.
7. For details of bikepath railing, see "Bikepath Details" sheets.
8. For longitudinal truss, see "Typical Girder Details No.12" sheet.

REGISTERED PROFESSIONAL ENGINEER Tien Hung Ho No. C 43990 Exp. 06/30/13 CIVIL STATE OF CALIFORNIA

FOR REVISIONS ONLY

CONTRACT CHANGE ORDER NO. _____
SHEET ____ OF ____

REQUESTS FOR INFORMATION NOT ADDRESSED IN THIS CCO REMAIN IN FORCE

ALL DIMENSIONS ARE IN MILLIMETERS UNLESS OTHERWISE SHOWN

R.Valizadeh/V.Toan/Y.L./W.L./F.C.
DESIGN OVERSIGHT
Ryan Valizadeh / Vong Toan / Y. Liu
SIGN OFF DATE 11/08/11

MARK	DATE	DESCRIPTIONS	BY	CH'D	CCO#
2	11/08/11	CABLE RAILING	DT	TH	188
1	05/15/09	HANDRAIL	GB	TH	114

REVISIONS

	BY	CHECKED
DESIGN	G. Baker	T. McMeans
DETAILS	M. Gulyas	T. McMeans
QUANTITIES	G. Baker	M. Roberts

PREPARED FOR THE STATE OF CALIFORNIA DEPARTMENT OF TRANSPORTATION

R. Manzanarez
PROJECT ENGINEER

BRIDGE NO. 34-0006L/R
KILOMETER POST 13.2/13.9

SAN FRANCISCO OAKLAND BAY BRIDGE
EAST SPAN SEISMIC SAFETY PROJECT
SELF-ANCHORED SUSPENSION BRIDGE
(SUPERSTRUCTURE & TOWER)

PARTIAL TYPICAL SECTION NO. 2

Rev. Date: 5-18-98

ORIGINAL SCALE IN MILLIMETERS FOR REDUCED PLANS 0 10 20 30 40 50 60 70 80 90 100

CU 04
EA 0120F1

DISREGARD PRINTS BEARING EARLIER REVISION DATES

REVISION DATES (PRELIMINARY STAGE ONLY) 01/15/99 05/15/99 08/02/99 05/31/01 04/26/01 07/01/02 12/19/02

SHEET 198R2 OF

FILE => I:\bb\04-012001\sas\contract plans and cco\cco\cco#188\3-revision 11-08-11\dgn\aftyp03.dgn

USERNAME => crivera DATE PLOTTED => 08 NOV 2011 TIME PLOTTED => 08:12:40

100 % PS&E

DIST.	COUNTY	ROUTE	KILOMETER POST TOTAL PROJECT	SHEET NO.	TOTAL SHEETS
04	SF	80	13.2/13.9	617R2	1204

Caltrans Metric

George Baker
REGISTERED ENGINEER - CIVIL

12-6-04
PLANS APPROVAL DATE

REGISTERED PROFESSIONAL ENGINEER George S. Baker No. C57112 Exp. 12/31/05 CIVIL STATE OF CALIFORNIA

The State of California or its officers or agents shall not be responsible for the accuracy or completeness of electronic copies of this plan sheet.

T.Y. LIN / MOFFATT & NICHOL
825 BATTERY STREET
SAN FRANCISCO, CA 94111

Caltrans now has a web site! To get to the web site, go to: http://www.dot.ca.gov

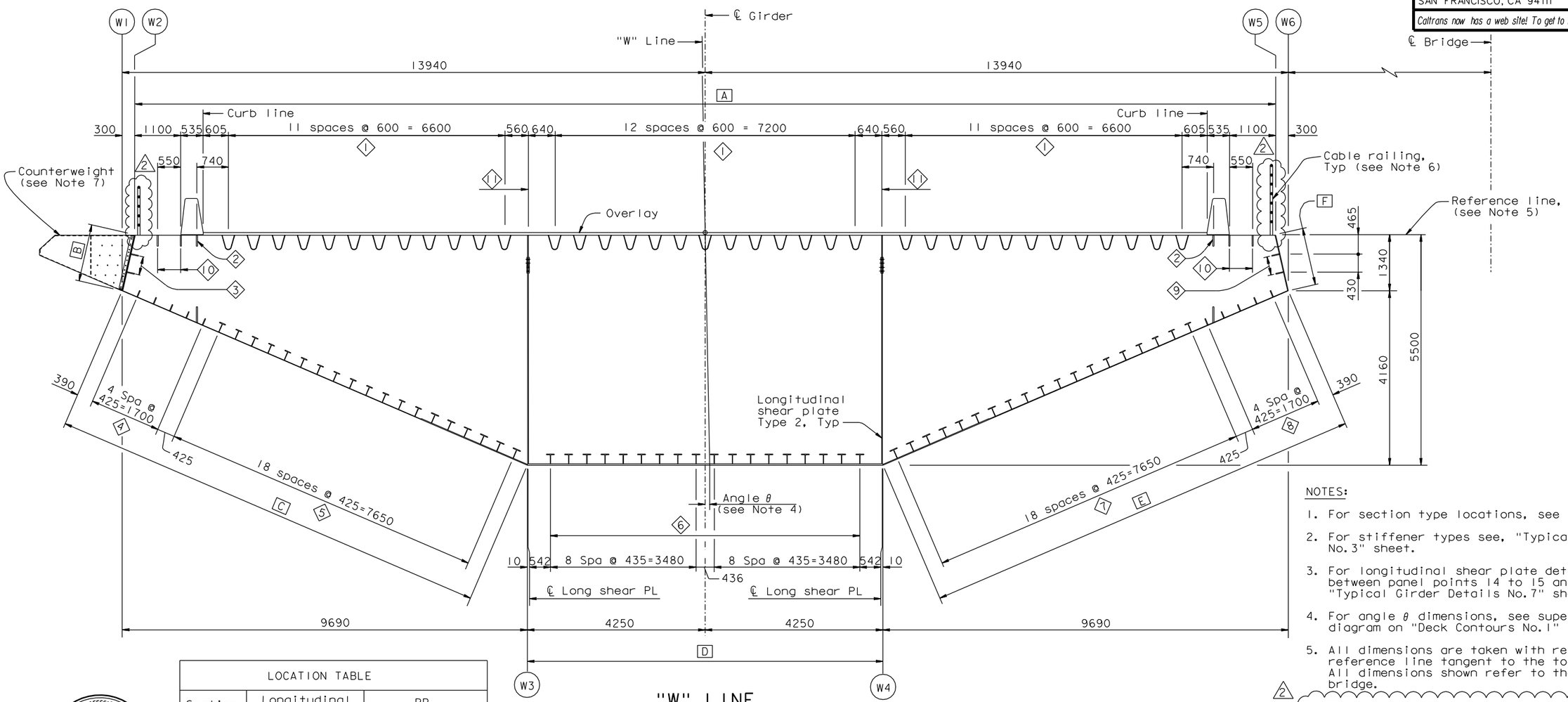

"W" LINE

SECTION TYPE 2

1:50

LOCATION TABLE		
Section Type	Longitudinal Shear PL Type	PP (Panel Point)
2	2	9.5 To 14
	2	112 To 115.2

NOTES:

1. For section type locations, see table this sheet.
2. For stiffener types see, "Typical Girder Details No.3" sheet.
3. For longitudinal shear plate details at transition between panel points 14 to 15 and 111 to 112, see "Typical Girder Details No.7" sheet.
4. For angle θ dimensions, see superelevation diagram on "Deck Contours No.1" sheet.
5. All dimensions are taken with respect to a reference line tangent to the top deck plate. All dimensions shown refer to the uncambered bridge.
6. For details of railing posts, struts, cables and cable hardware, see "Typical Girder Details No.17A, 17B and 17C" sheets. For base details, see "Typical Girder Details No.12" sheet.
7. For counterweight details, see "Typical Girder Details No.17" sheet.

REGISTERED PROFESSIONAL ENGINEER Tien Hung Ho No. C 43990 Exp. 06/30/13 CIVIL STATE OF CALIFORNIA

FOR REVISIONS ONLY

CONTRACT CHANGE ORDER NO. ____
SHEET ___ OF ___

REQUESTS FOR INFORMATION NOT ADDRESSED IN THIS CCO REMAIN IN FORCE

ALL DIMENSIONS ARE IN MILLIMETERS UNLESS OTHERWISE SHOWN

R. Valizadeh/V.Toan/Y.L./W.L./F.C.
DESIGN OVERSIGHT
Reza Valizadeh / Vong Toan / Y. Liu
SIGN OFF DATE 11/08/11

MARK	DATE	DESCRIPTIONS	BY	CH'D	CCO#
2	11/08/11	CABLE RAILING	DT	TH	188
1	05/15/09	HANDRAIL	GB	TH	114

REVISIONS

	BY	CHECKED
DESIGN	G. Baker	T. McMeans
DETAILS	M. Gulyas	T. McMeans
QUANTITIES	G. Baker	M. Roberts

PREPARED FOR THE STATE OF CALIFORNIA DEPARTMENT OF TRANSPORTATION

R. Manzanarez
PROJECT ENGINEER

BRIDGE NO. 34-0006L/R
KILOMETER POST 13.2/13.9

SAN FRANCISCO OAKLAND BAY BRIDGE
EAST SPAN SEISMIC SAFETY PROJECT
SELF-ANCHORED SUSPENSION BRIDGE
(SUPERSTRUCTURE & TOWER)

PARTIAL TYPICAL SECTION NO.4

Rev. Date: 5-18-98

ORIGINAL SCALE IN MILLIMETERS FOR REDUCED PLANS 0 10 20 30 40 50 60 70 80 90 100

CU 04
EA 0120F1

DISREGARD PRINTS BEARING EARLIER REVISION DATES

REVISION DATES (PRELIMINARY STAGE ONLY) 01/15/99 05/15/99 08/02/99 05/17/01 04/08/02 07/01/02 12/19/02

SHEET 200R2 OF

FILE => I:\bb\04-012001\sas\contract plans and cco\cco\cco#188\3-revision 11-08-11\dgn\aftyp04.dgn

100% PS&E

USERNAME => arivera DATE PLOTTED => 08 NOV 2011 TIME PLOTTED => 08:13:23

DIST.	COUNTY	ROUTE	KILOMETER POST TOTAL PROJECT	SHEET NO.	TOTAL SHEETS
04	SF	80	13.2/13.9	618R2	1204

Caltrans Metric

George Baker
REGISTERED ENGINEER - CIVIL

12-6-04
PLANS APPROVAL DATE

REGISTERED PROFESSIONAL ENGINEER George S. Baker No. C57112 Exp. 12/31/05 CIVIL STATE OF CALIFORNIA

The State of California or its officers or agents shall not be responsible for the accuracy or completeness of electronic copies of this plan sheet.

T.Y. LIN / MOFFATT & NICHOL
825 BATTERY STREET
SAN FRANCISCO, CA 94111

Caltrans now has a web site! To get to the web site, go to: http://www.dot.ca.gov

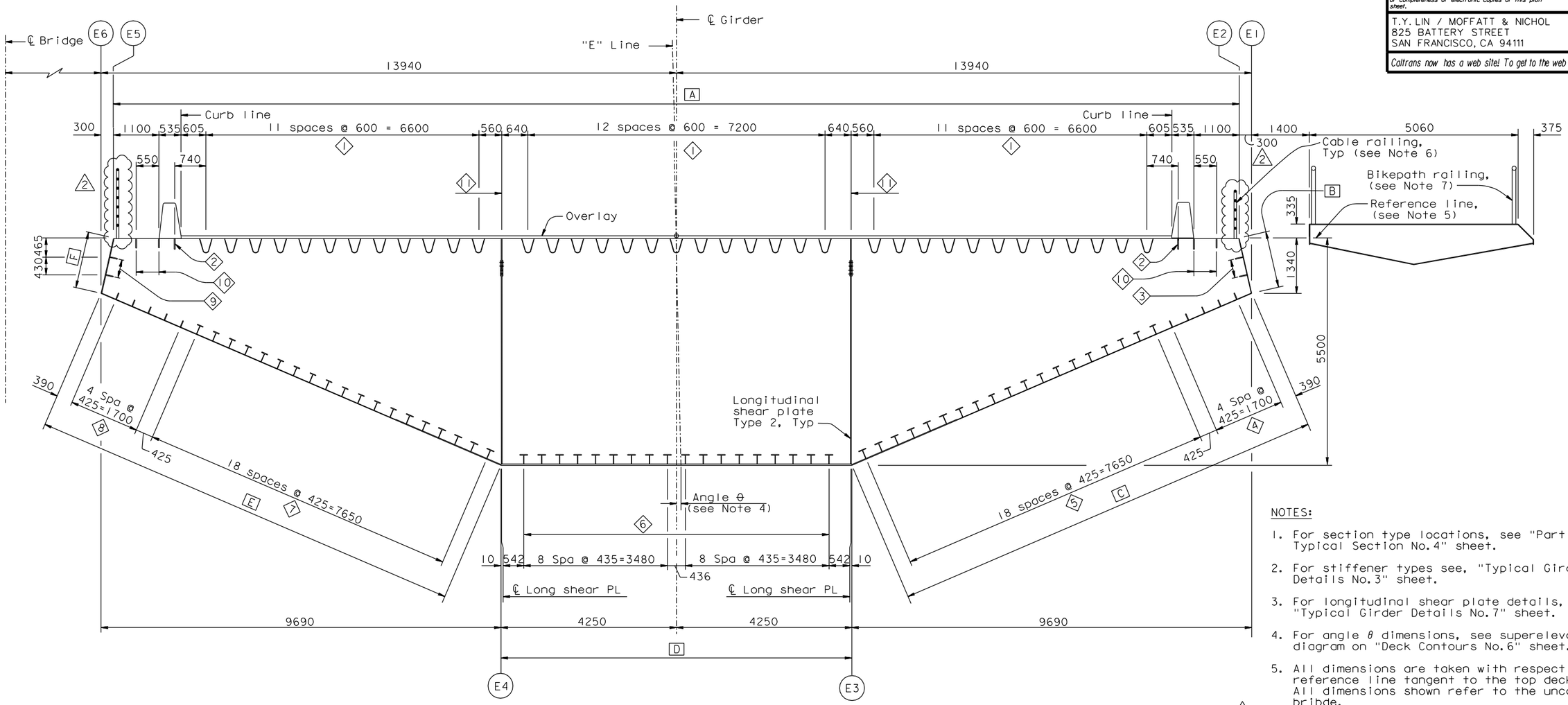

"E" LINE

SECTION TYPE 2

1:50

NOTES:

1. For section type locations, see "Partial Typical Section No.4" sheet.
2. For stiffener types see, "Typical Girder Details No.3" sheet.
3. For longitudinal shear plate details, see "Typical Girder Details No.7" sheet.
4. For angle θ dimensions, see superelevation diagram on "Deck Contours No.6" sheet.
5. All dimensions are taken with respect to a reference line tangent to the top deck plate. All dimensions shown refer to the uncambered bribde.
6. For details of railing posts, struts, cables and cable hardware, see "Typical Girder Details No.17A, 17B and 17C" sheets. For base details, see "Typical Girder Details No.12" sheet. (2)
7. For details of bikepath railing, see "Bikepath Details" sheets.

REGISTERED PROFESSIONAL ENGINEER Tien Hung Ho No. C 43990 Exp. 06/30/13 CIVIL STATE OF CALIFORNIA

FOR REVISIONS ONLY

CONTRACT CHANGE ORDER NO. _____
SHEET ____ OF ____

REQUESTS FOR INFORMATION NOT ADDRESSED IN THIS CCO REMAIN IN FORCE

ALL DIMENSIONS ARE IN MILLIMETERS UNLESS OTHERWISE SHOWN

R. Valizadeh/V. Toan/Y.L./W.L./F.C.
DESIGN OVERSIGHT
Roya Valizadeh / Vong Toan / Y. Liu
SIGN OFF DATE 11/08/11

MARK	DATE	DESCRIPTIONS	BY	CH'D	CCO#
2	11/08/11	CABLE RAILING	DT	TH	188
1	05/15/09	HANDRAIL	GB	TH	114

REVISIONS

DESIGN	BY G. Baker	CHECKED	T. McMeans
DETAILS	BY M. Gulyas	CHECKED	T. McMeans
QUANTITIES	BY G. Baker	CHECKED	M. Roberts

PREPARED FOR THE STATE OF CALIFORNIA DEPARTMENT OF TRANSPORTATION

R. Manzanarez
PROJECT ENGINEER

BRIDGE NO. 34-0006L/R
KILOMETER POST 13.2/13.9

SAN FRANCISCO OAKLAND BAY BRIDGE
EAST SPAN SEISMIC SAFETY PROJECT
SELF-ANCHORED SUSPENSION BRIDGE
(SUPERSTRUCTURE & TOWER)

PARTIAL TYPICAL SECTION NO.5

Rev. Date: 5-18-98

ORIGINAL SCALE IN MILLIMETERS FOR REDUCED PLANS 0 10 20 30 40 50 60 70 80 90 100

CU 04
EA 0120F1

DISREGARD PRINTS BEARING EARLIER REVISION DATES

REVISION DATES (PRELIMINARY STAGE ONLY) 01/15/99 05/15/99 08/02/99 05/31/01 04/26/02 07/01/02 12/19/02

SHEET 201R2 OF

FILE => I:\bb\04-012001\sas\contract plans and cco\cco\cco#188\3-revision 11-08-11\dgn\aftyp05.dgn

100% PS&E

USERNAME => arivera DATE PLOTTED => 08 NOV 2011 TIME PLOTTED => 08:14:00

DIST.	COUNTY	ROUTE	KILOMETER POST TOTAL PROJECT	SHEET NO.	TOTAL SHEETS
04	SF	80	13.2/13.9	636R3	1204

Caltrans Metric

George Baker
REGISTERED ENGINEER - CIVIL
12-6-04
PLANS APPROVAL DATE

REGISTERED PROFESSIONAL ENGINEER George S. Baker No. C57112 Exp. 12/31/05 CIVIL STATE OF CALIFORNIA

The State of California or its officers or agents shall not be responsible for the accuracy or completeness of electronic copies of this plan sheet.

T.Y. LIN / MOFFATT & NICHOL
825 BATTERY STREET
SAN FRANCISCO, CA 94111

Caltrans now has a web site! To get to the web site, go to: http://www.dot.ca.gov

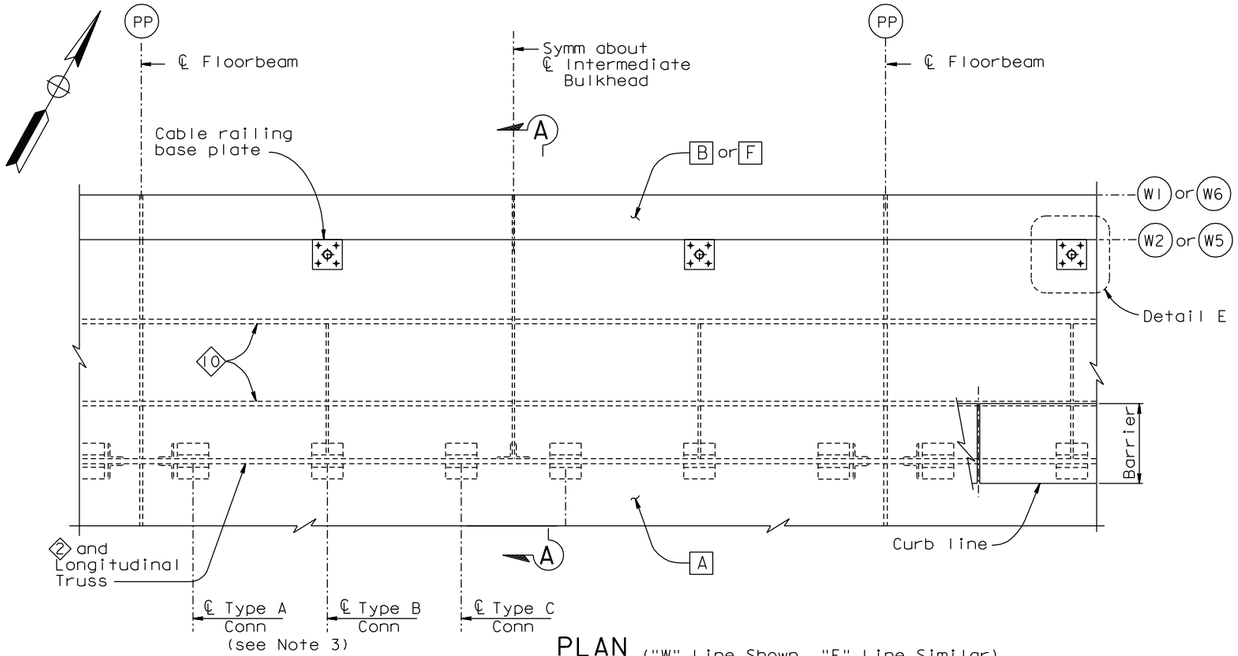

PLAN ("W" Line Shown, "E" Line Similar)
1:20

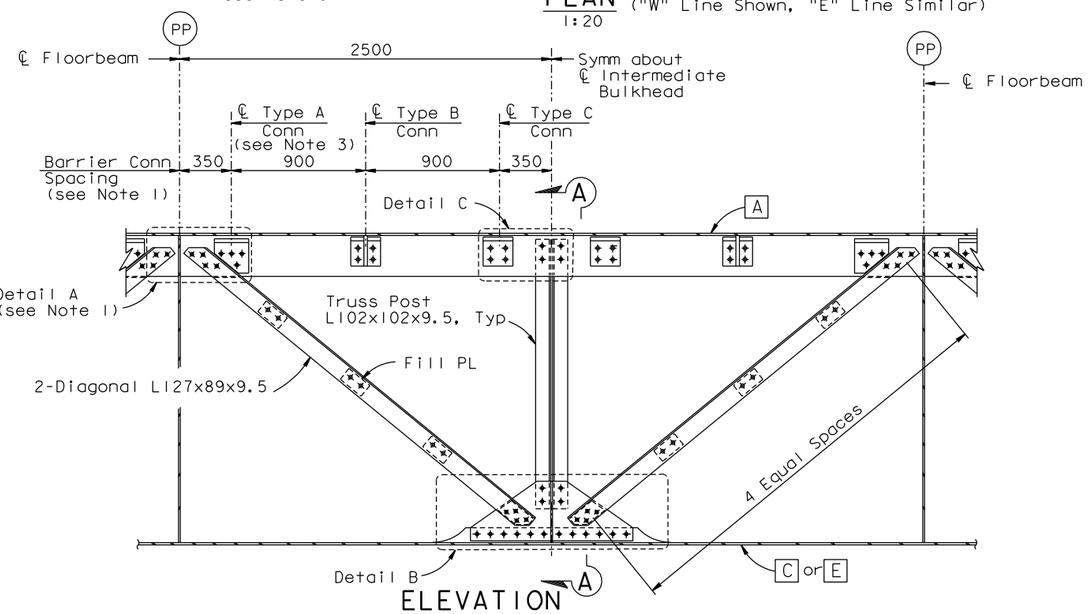

ELEVATION
LONGITUDINAL TRUSS ("W" Line Shown, "E" Line Similar)
1:20

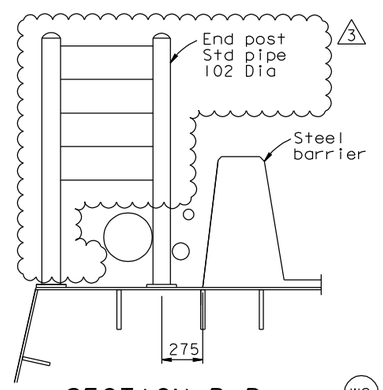

SECTION B-B
1:20

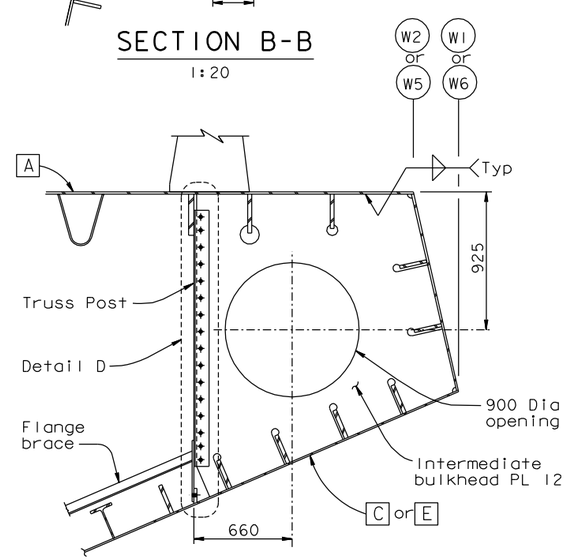

SECTION A-A
1:20

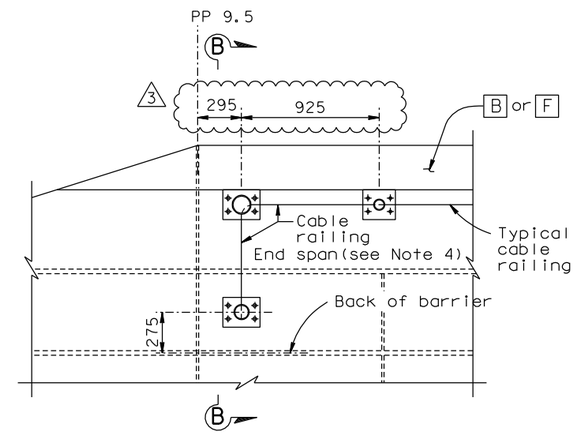

PLAN OF CABLE RAILING TERMINATION
1:20
(PP 9.5 shown, PP127 similar, PP40&44 W5 Line similar, "W" Line shown, "E" Line similar)

NOTES:

1. For barrier connection details, see "Typical Girder Details No.14" sheet.
2. For Details A, B, C, and D, see "Typical Girder Details No.13" sheet.
3. For locations without a longitudinal truss, barrier connection Type C shall be used in lieu of connection Type A.
4. For details not shown, see "Typical Girder Details No.17A, 17B and 17C" sheets.
5. (3) For Detail E, see "Typical Girder Details No.12A" sheet.
6. At the Contractor's option, a 6 mm fillet weld around the perimeter of the PL 20 may be used in lieu of 4 M20 bolts, subject to review and approval of the Engineer.

REGISTERED PROFESSIONAL ENGINEER Daniel J. Turner No. C 65033 Exp. 06/30/13 CIVIL STATE OF CALIFORNIA

FOR REVISIONS ONLY

CONTRACT CHANGE ORDER NO. ____
SHEET ___ OF ___

REQUESTS FOR INFORMATION NOT ADDRESSED IN THIS CCO REMAIN IN FORCE

MARK	DATE	DESCRIPTIONS	BY	CH'D	CCO#
3	11/08/11	CABLE RAILING	GB	DT	188
2	05/15/09	HANDRAIL	GB	DT	114
1	08/24/07	BARRIER MODIFICATIONS	GB	DT	44

REVISIONS

R. Valizadeh/V. Toan/Y.L./W.L./F.C.
DESIGN OVERSIGHT
SIGN OFF DATE 11/08/11

	BY	CHECKED
DESIGN	G. Baker	P. Ritchie
DETAILS	C. Mauch	T. McMeans
QUANTITIES	G. Baker	M. Roberts

PREPARED FOR THE STATE OF CALIFORNIA DEPARTMENT OF TRANSPORTATION

R. Manzanarez
PROJECT ENGINEER

ALL DIMENSIONS ARE IN MILLIMETERS UNLESS OTHERWISE SHOWN

BRIDGE NO. 34-0006L/R
KILOMETER POST 13.2/13.9

SAN FRANCISCO OAKLAND BAY BRIDGE
EAST SPAN SEISMIC SAFETY PROJECT
SELF-ANCHORED SUSPENSION BRIDGE
(SUPERSTRUCTURE & TOWER)

TYPICAL GIRDER DETAILS NO. 12

Rev. Date: 5-18-98

ORIGINAL SCALE IN MILLIMETERS FOR REDUCED PLANS 0 10 20 30 40 50 60 70 80 90 100

CU 04
EA 0120F1

DISREGARD PRINTS BEARING EARLIER REVISION DATES

REVISION DATES (PRELIMINARY STAGE ONLY): 05/15/99 08/02/99 05/31/01 04/08/02 07/24/02 12/19/02

SHEET 219R3 OF

FILE => I:\bb\04-012001\sas\contract plans and cco\cco\cco#188\3-revision 11-08-11\dgn\agdkd06b.dgn

100 % PS&E

USERNAME => orivera DATE PLOTTED => 08 NOV 2011 TIME PLOTTED => 08:14:37

DIST.	COUNTY	ROUTE	KILOMETER POST TOTAL PROJECT	SHEET NO.	TOTAL SHEETS
04	SF	80	13.2/13.9	636S1	1204

Caltrans Metric

Daniel J. Turner
REGISTERED ENGINEER - CIVIL

11-08-11
PLANS APPROVAL DATE

REGISTERED PROFESSIONAL ENGINEER Daniel J. Turner No. C 65033 Exp. 06/30/13 CIVIL STATE OF CALIFORNIA

The State of California or its officers or agents shall not be responsible for the accuracy or completeness of electronic copies of this plan sheet.

T.Y. LIN / MOFFATT & NICHOL
825 BATTERY STREET
SAN FRANCISCO, CA 94111

Caltrans now has a web site! To get to the web site, go to: http://www.dot.ca.gov

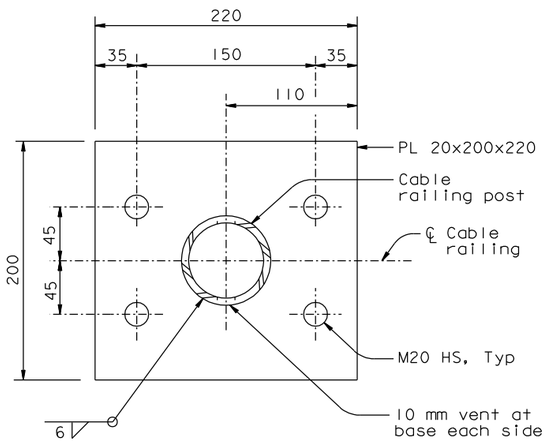

AT INTERNAL POSTS

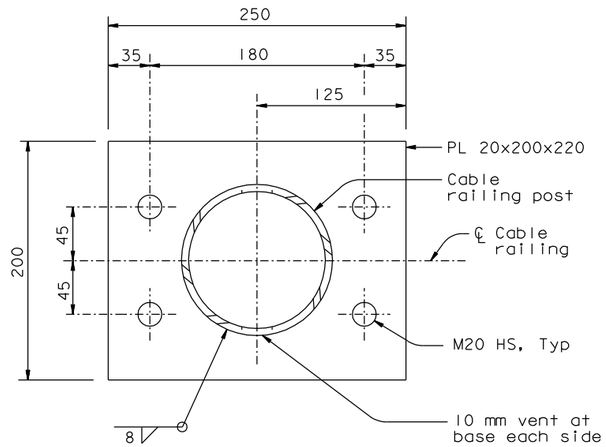

AT W2 / E2 & CROSSBEAM END POSTS

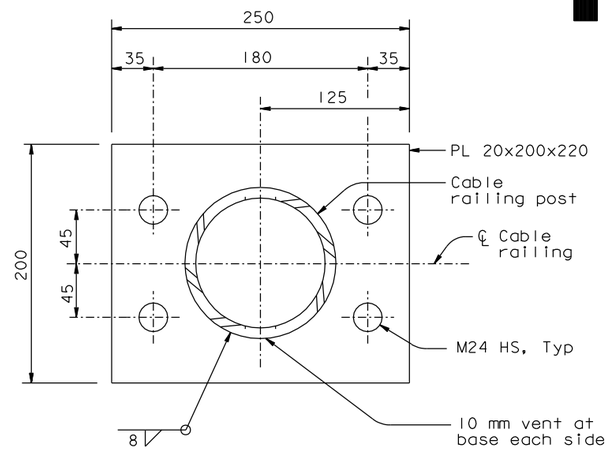

AT W5 / E5 END POSTS

DETAIL E (See Note 1)

1:2.5

NOTES:

1. At the Contractor's option, an 8 mm fillet weld around the perimeter of the base plate may be used in lieu of 4 bolts.
2. Abandoned bolt holes in the deck plate and crossbeam top flange plate shall be caulked.

100% PS&E

CONTRACT CHANGE ORDER NO. ____
SHEET ____ OF ____

REQUESTS FOR INFORMATION NOT ADDRESSED IN THIS CCO REMAIN IN FORCE

ALL DIMENSIONS ARE IN MILLIMETERS UNLESS OTHERWISE SHOWN

R. Valizadeh/V. Toan/Y.L./W.L./F.C.
DESIGN OVERSIGHT
SIGN OFF DATE 11/08/11

MARK	DATE	DESCRIPTIONS	BY	CH'D	CCO#
0	11/08/11	CABLE RAILING	DT	GB	188

REVISIONS

	BY	CHECKED
DESIGN	D. Turner	G. Baker
DETAILS	D. Turner	G. Baker
QUANTITIES	D. Turner	G. Baker

PREPARED FOR THE STATE OF CALIFORNIA DEPARTMENT OF TRANSPORTATION

R. Manzanarez
PROJECT ENGINEER

BRIDGE NO. 34-0006L/R
KILOMETER POST 13.2/13.9

SAN FRANCISCO OAKLAND BAY BRIDGE
EAST SPAN SEISMIC SAFETY PROJECT
SELF-ANCHORED SUSPENSION BRIDGE
(SUPERSTRUCTURE & TOWER)

TYPICAL GIRDER DETAILS NO. 12A

Rev. Date: 5-18-98

ORIGINAL SCALE IN MILLIMETERS FOR REDUCED PLANS 0 10 20 30 40 50 60 70 80 90 100

CU 04
EA 0120F1

DISREGARD PRINTS BEARING EARLIER REVISION DATES → 11/08/11

REVISION DATES (PRELIMINARY STAGE ONLY)

SHEET 219S1 OF

FILE => I:\bb\04-012001\sas\contract plans and cco\cco\cco#188\3-revision 11-08-11\dgn\agdkd06c.dgn

USERNAME => arivera DATE PLOTTED => 08 NOV 2011 TIME PLOTTED => 10:06:07

DIST.	COUNTY	ROUTE	KILOMETER POST TOTAL PROJECT	SHEET NO.	TOTAL SHEETS
04	SF	80	13.2/13.9	641SIRI	1204

Caltrans Metric

REGISTERED ENGINEER - CIVIL

05-15-09
PLANS APPROVAL DATE

REGISTERED PROFESSIONAL ENGINEER Tien Hung Ho No. C 43990 Exp. 06/30/13 CIVIL STATE OF CALIFORNIA

The State of California or its officers or agents shall not be responsible for the accuracy or completeness of electronic copies of this plan sheet.

T.Y. LIN / MOFFATT & NICHOL
825 BATTERY STREET
SAN FRANCISCO, CA 94111

Caltrans now has a web site! To get to the web site, go to: http://www.dot.ca.gov

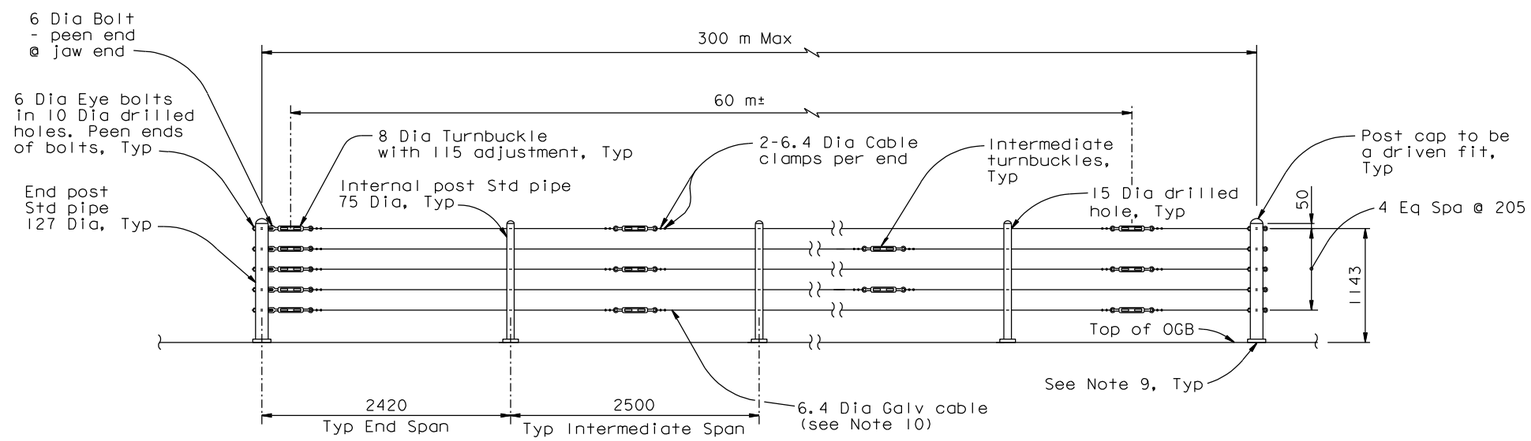

ELEVATION - TYPICAL

CABLE RAILING - W2 LINE (E2 Similar)

1:30

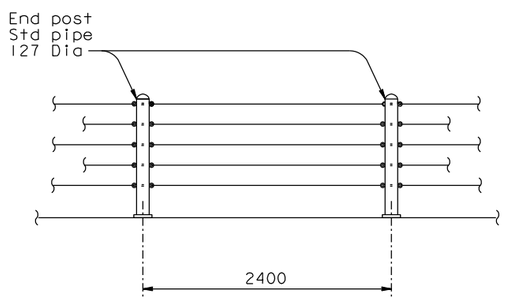

MID-SPAN CABLE BRACING DETAIL

1:30

NOTES:

1. Maximum distance between turnbuckles shall be 60 m ±.
2. Intermediate turnbuckles to be placed in adjacent spans.
3. Cable shall not be spliced between intermediate turnbuckles and end posts.
4. All posts, cable and hardware to be galvanized.
5. Posts to be vertical in the transverse direction and normal to the deck in the longitudinal direction.
6. Alternative details may be submitted by the Contractor for approval by the Engineer.
7. Typical end spans, braced in both directions, shall be constructed at changes in line where the angle of deflection is 15° or more.
8. Provide thimbles at all cable loops.
9. For post base details, see "Typical Girder Details No. 12" sheet.
10. The bottom cable shall terminate at the vertical posts on either side of the utility pipe expansion loops on the E2 Line. The bottom two cables shall terminate at the vertical posts on either side of the utility pipe expansion loops on the W2 Line.

100% PS&E

CONTRACT CHANGE ORDER NO. ____
SHEET ____ OF ____

REQUESTS FOR INFORMATION NOT ADDRESSED IN THIS CCO REMAIN IN FORCE

ALL DIMENSIONS ARE IN MILLIMETERS UNLESS OTHERWISE SHOWN

R. Valizadeh/V. Toan/Y.L./W.L./F.C.
DESIGN OVERSIGHT
SIGN OFF DATE 11/08/11

MARK	DATE	DESCRIPTIONS	BY	CH'D	CCO#
1	11/08/11	CABLE RAILING	GB	TH	188
0	05/15/09	HANDRAIL	GB	TH	114

REVISIONS

	BY	CHECKED
DESIGN	G. Baker	T. Ho
DETAILS	G. Baker	T. Ho
QUANTITIES	G. Baker	T. Ho

PREPARED FOR THE STATE OF CALIFORNIA DEPARTMENT OF TRANSPORTATION

R. Manzanarez
PROJECT ENGINEER

BRIDGE NO. 34-0006L/R
KILOMETER POST 13.2/13.9

SAN FRANCISCO OAKLAND BAY BRIDGE
EAST SPAN SEISMIC SAFETY PROJECT
SELF-ANCHORED SUSPENSION BRIDGE
(SUPERSTRUCTURE & TOWER)

TYPICAL GIRDER DETAILS NO. 17A

Rev. Date: 5-18-98

ORIGINAL SCALE IN MILLIMETERS FOR REDUCED PLANS 0 10 20 30 40 50 60 70 80 90 100

CU 04
EA 0120F1

DISREGARD PRINTS BEARING EARLIER REVISION DATES 05/15/09

REVISION DATES (PRELIMINARY STAGE ONLY)

SHEET 224SIRI OF

FILE => I:\bb\04-012001\sas\contract plans and cco\cco\cco#188\3-revision 11-08-11\dgn\agdkd06e.dgn

USERNAME => arivera DATE PLOTTED => 08 NOV 2011 TIME PLOTTED => 08:16:18

DIST.	COUNTY	ROUTE	KILOMETER POST TOTAL PROJECT	SHEET NO.	TOTAL SHEETS
04	SF	80	13.2/13.9	641S2	1204

Caltrans Metric

REGISTERED ENGINEER - CIVIL

11-08-11
PLANS APPROVAL DATE

PROFESSIONAL ENGINEER REGISTERED Tien Hung Ho No. C 43990 Exp. 06/30/13 CIVIL STATE OF CALIFORNIA

The State of California or its officers or agents shall not be responsible for the accuracy or completeness of electronic copies of this plan sheet.

T.Y. LIN / MOFFATT & NICHOL
825 BATTERY STREET
SAN FRANCISCO, CA 94111

Caltrans now has a web site! To get to the web site, go to: http://www.dot.ca.gov

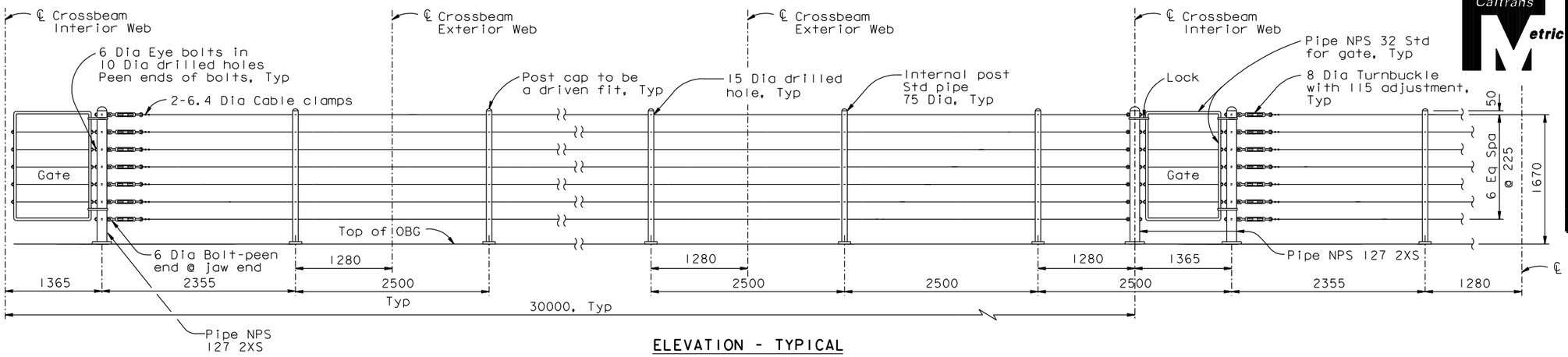

ELEVATION - TYPICAL

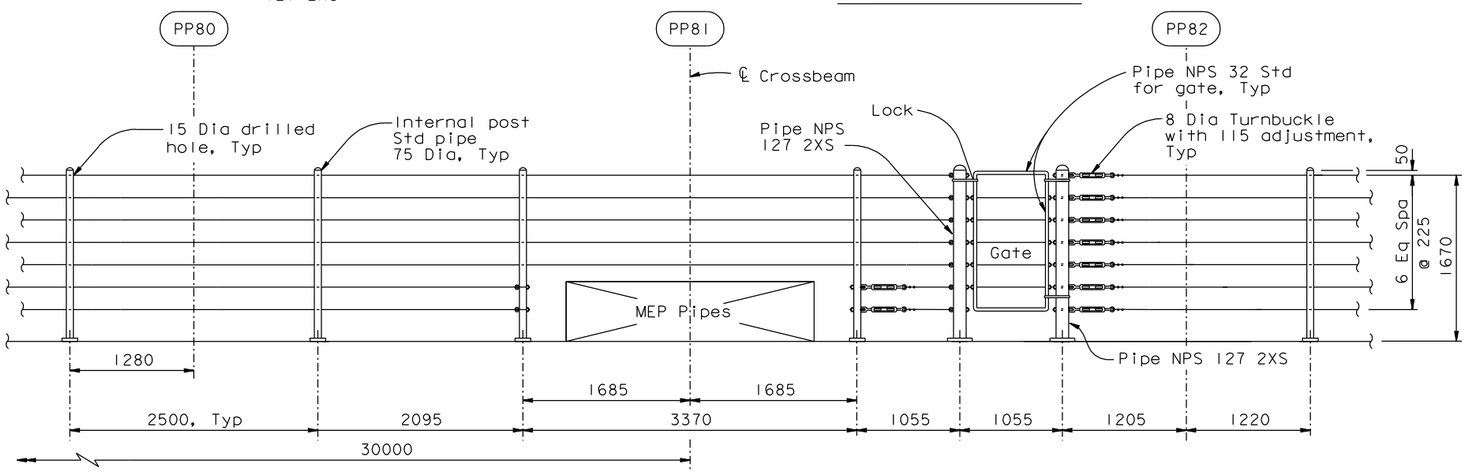

ELEVATION AT UTILITY PIPE EXPANSION LOOPS (PP80-82 Shown, PP125-127 Similar)

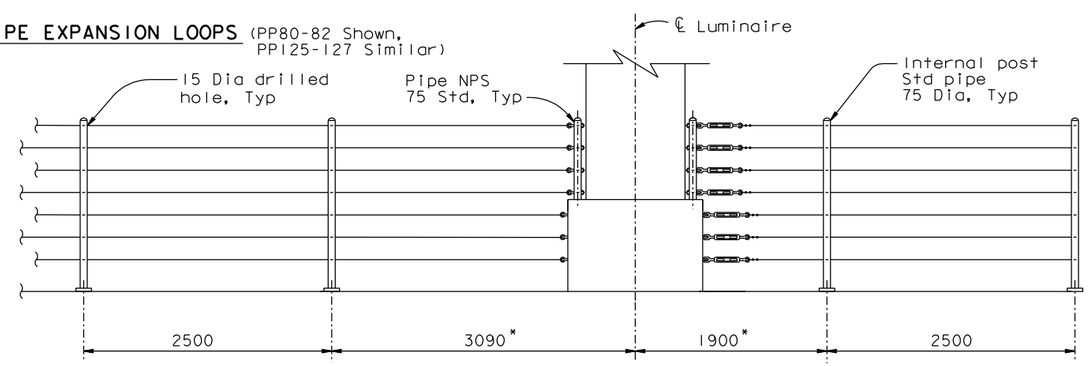

ELEVATION AT LUMINAIRE - TYPICAL * Dimension may vary

NOTES:

1. Maximum distance between turnbuckles shall be 60 m ±.
2. Intermediate turnbuckles to be placed in adjacent spans.
3. Cable shall not be spliced between intermediate turnbuckles and end posts.
4. All posts, cable and hardware to be galvanized.
5. Posts to be vertical in the transverse direction and normal to the deck in the longitudinal direction.
6. Alternative details may be submitted by the Contractor for approval by the Engineer.
7. Typical end spans, braced in both directions, shall be constructed at changes in line where the angle of deflection is 15° or more.
8. Provide thimbles at all cable loops.
9. For post base details, see "Typical Girder Details No. 12" sheet.

CONTRACT CHANGE ORDER NO. ____
SHEET ___ OF ___

REQUESTS FOR INFORMATION NOT ADDRESSED IN THIS CCO REMAIN IN FORCE

CABLE RAILING - W5, E5 LINES
1:30

ALL DIMENSIONS ARE IN MILLIMETERS UNLESS OTHERWISE SHOWN

100% PS&E

R. Valizadeh/V. Toan/Y.L./W.L./F.C.
DESIGN OVERSIGHT
Reza Valizadeh / Vong Toan / Y. Liu
SIGN OFF DATE 11/08/11

MARK	DATE	DESCRIPTIONS	BY	CH'D	CCO#
0	11/08/11	CABLE RAILING	GB	TH	188

REVISIONS

	BY	CHECKED
DESIGN	G. Baker	T. Ho
DETAILS	G. Baker	T. Ho
QUANTITIES	G. Baker	T. Ho

PREPARED FOR THE STATE OF CALIFORNIA DEPARTMENT OF TRANSPORTATION

R. Manzanarez
PROJECT ENGINEER

BRIDGE NO. 34-0006L/R
KILOMETER POST 13.2/13.9

SAN FRANCISCO OAKLAND BAY BRIDGE
EAST SPAN SEISMIC SAFETY PROJECT
SELF-ANCHORED SUSPENSION BRIDGE
(SUPERSTRUCTURE & TOWER)

TYPICAL GIRDER DETAILS NO. 17B

Rev. Date: 5-18-98

ORIGINAL SCALE IN MILLIMETERS FOR REDUCED PLANS 0 10 20 30 40 50 60 70 80 90 100

CU 04
EA 0120F1

DISREGARD PRINTS BEARING EARLIER REVISION DATES 11/08/11

REVISION DATES (PRELIMINARY STAGE ONLY)

SHEET 224S2 OF

FILE => I:\bb\04-012001\sas\contract plans and cco\cco\cco#188\3-revision 11-08-11\dgn\agdkd06f.dgn

USERNAME => arivera DATE PLOTTED => 08 NOV 2011 TIME PLOTTED => 08:17:08

DIST.	COUNTY	ROUTE	KILOMETER POST TOTAL PROJECT	SHEET NO.	TOTAL SHEETS
04	SF	80	13.2/13.9	641S3	1204

Caltrans Metric

REGISTERED ENGINEER - CIVIL

11-08-11
PLANS APPROVAL DATE

PROFESSIONAL ENGINEER REGISTERED Tien Hung Ho No. C 43990 Exp. 06/30/13 CIVIL STATE OF CALIFORNIA

The State of California or its officers or agents shall not be responsible for the accuracy or completeness of electronic copies of this plan sheet.

T.Y. LIN / MOFFATT & NICHOL
825 BATTERY STREET
SAN FRANCISCO, CA 94111

Caltrans now has a web site! To get to the web site, go to: http://www.dot.ca.gov

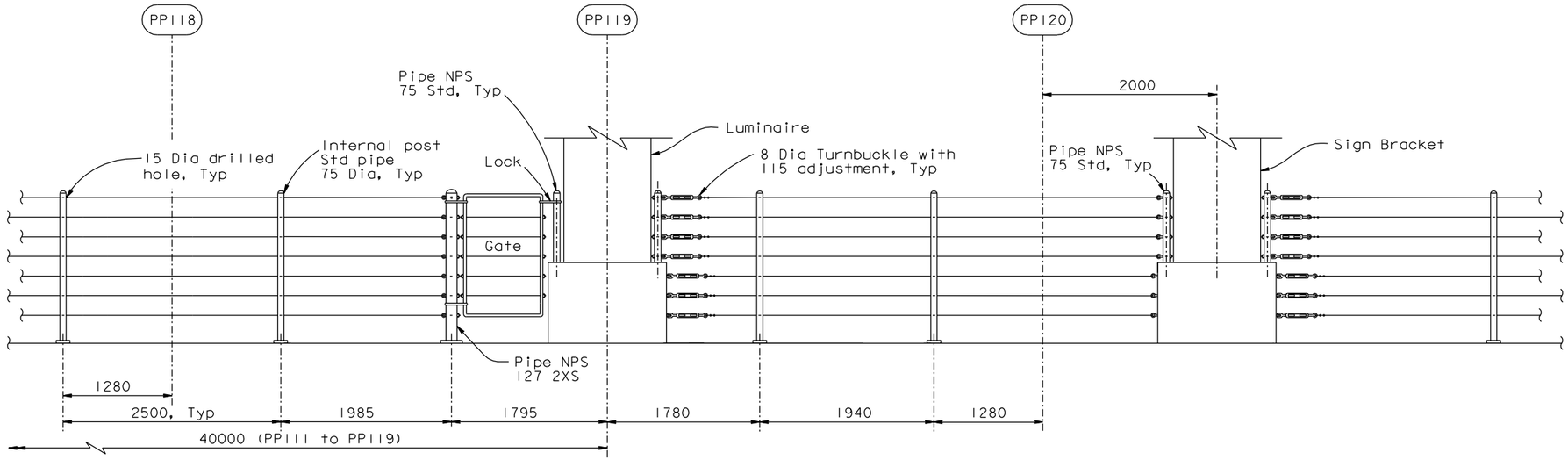

W5 LINE

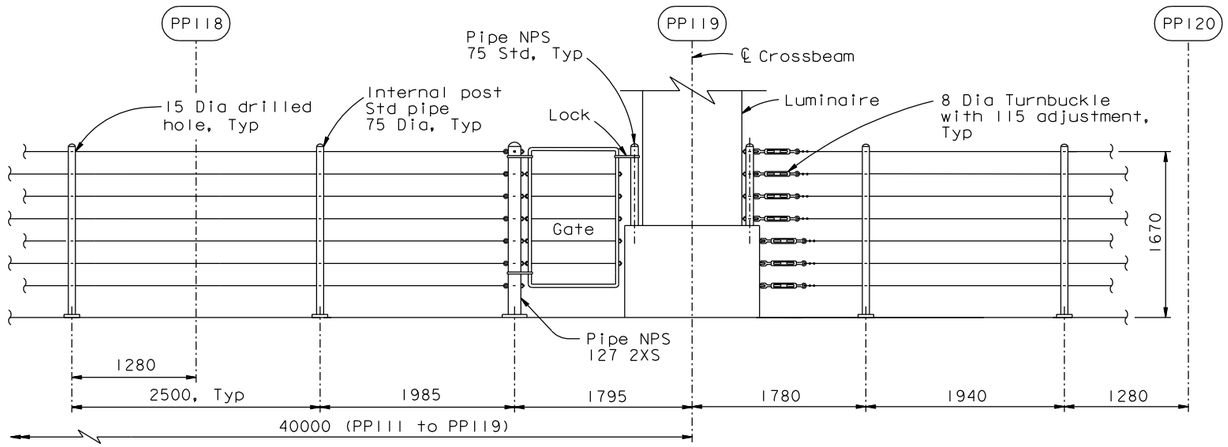

E5 LINE

NOTES:

1. Maximum distance between turnbuckles shall be 60 m ±.
2. Intermediate turnbuckles to be placed in adjacent spans.
3. Cable shall not be spliced between intermediate turnbuckles and end posts.
4. All posts, cable and hardware to be galvanized.
5. Posts to be vertical in the transverse direction and normal to the deck in the longitudinal direction.
6. Alternative details may be submitted by the Contractor for approval by the Engineer.
7. Typical end spans, braced in both directions, shall be constructed at changes in line where the angle of deflection is 15° or more.
8. Provide thimbles at all cable loops.
9. For post base details, see "Typical Girder Details No. 12" sheet.

CABLE RAILING AT PIER E2 - W5, E5 LINES

1:30

CONTRACT CHANGE ORDER NO. _____
SHEET ____ OF ____

REQUESTS FOR INFORMATION NOT ADDRESSED IN THIS CCO REMAIN IN FORCE

ALL DIMENSIONS ARE IN MILLIMETERS UNLESS OTHERWISE SHOWN

R. Valizadeh/V. Toan/Y.L./W.L./F.C.
DESIGN OVERSIGHT
SIGN OFF DATE 11/08/11

MARK	DATE	DESCRIPTIONS	BY	CH'D	CCO#
0	11/08/11	CABLE RAILING	GB	TH	188

REVISIONS

	BY	CHECKED
DESIGN	G. Baker	T. Ho
DETAILS	G. Baker	T. Ho
QUANTITIES	G. Baker	T. Ho

PREPARED FOR THE STATE OF CALIFORNIA DEPARTMENT OF TRANSPORTATION

R. Manzanarez
PROJECT ENGINEER

BRIDGE NO. 34-0006L/R
KILOMETER POST 13.2/13.9

SAN FRANCISCO OAKLAND BAY BRIDGE
EAST SPAN SEISMIC SAFETY PROJECT
SELF-ANCHORED SUSPENSION BRIDGE
(SUPERSTRUCTURE & TOWER)

TYPICAL GIRDER DETAILS NO. 17C

Rev. Date: 5-18-98

ORIGINAL SCALE IN MILLIMETERS FOR REDUCED PLANS 0 10 20 30 40 50 60 70 80 90 100

CU 04
EA 0120F1

DISREGARD PRINTS BEARING EARLIER REVISION DATES 11/08/11

REVISION DATES (PRELIMINARY STAGE ONLY)

SHEET 224S3 OF

FILE => I:\bb\04-012001\sas\contract plans and cco\cco\cco#188\3-revision 11-08-11\dgn\agdkd06g.dgn

100% PS&E

USERNAME => arivera DATE PLOTTED => 08 NOV 2011 TIME PLOTTED => 08:17:47

DIST.	COUNTY	ROUTE	KILOMETER POST TOTAL PROJECT	SHEET NO.	TOTAL SHEETS
04	SF	80	13.2/13.9	641S4	1204

Caltrans Metric

REGISTERED ENGINEER - CIVIL

11-08-11
PLANS APPROVAL DATE

REGISTERED PROFESSIONAL ENGINEER Tien Hung Ho No. C 43990 Exp. 06/30/13 CIVIL STATE OF CALIFORNIA

The State of California or its officers or agents shall not be responsible for the accuracy or completeness of electronic copies of this plan sheet.

T.Y. LIN / MOFFATT & NICHOL
825 BATTERY STREET
SAN FRANCISCO, CA 94111

Caltrans now has a web site! To get to the web site, go to: http://www.dot.ca.gov

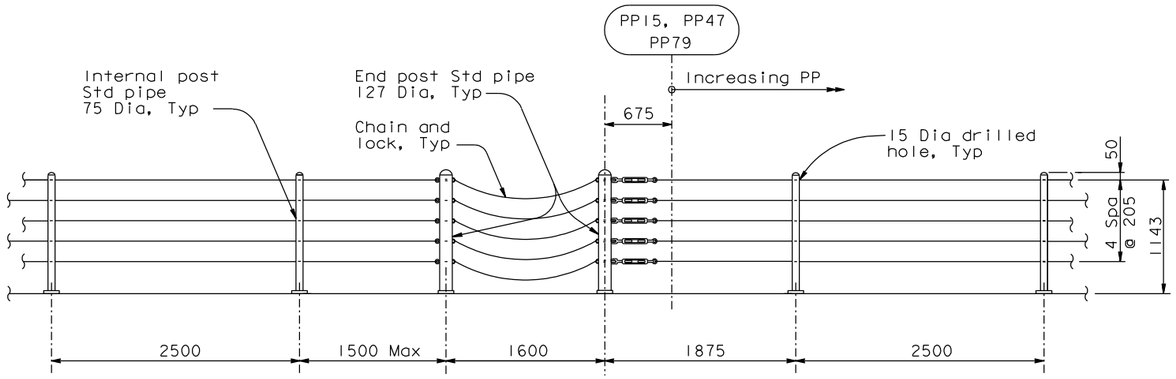

ELEVATION

FENCE CONFIGURATION AT E2-BIKEPATH EMERGENCY ACCESS AT PP15, PP47 & PP79

1:30

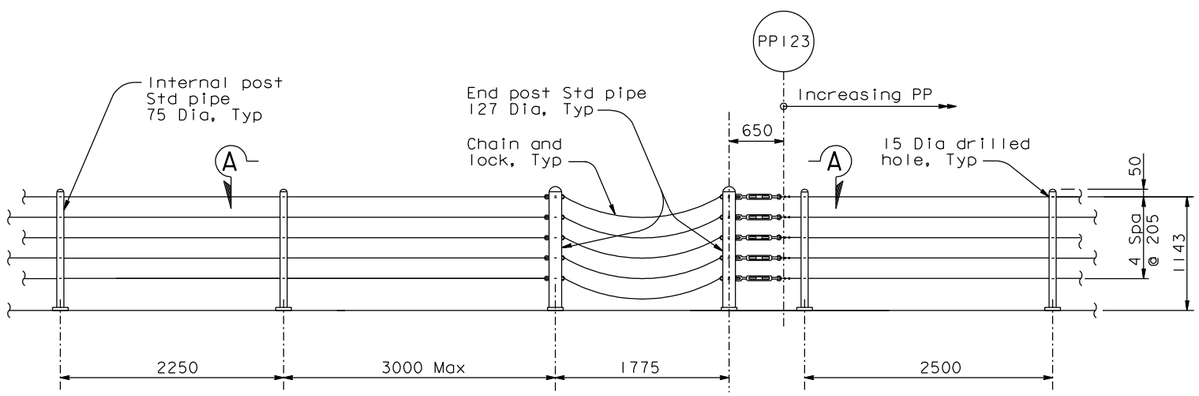

ELEVATION

FENCE CONFIGURATION AT E2-BIKEPATH EMERGENCY ACCESS AT PP123

1:30

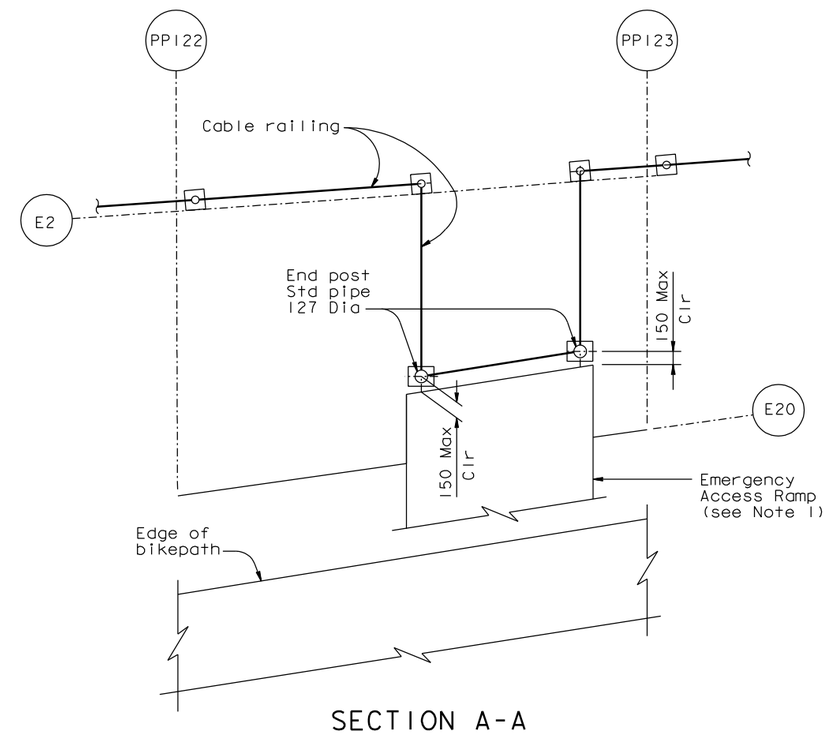

SECTION A-A

1:30

NOTES:

1. For details of emergency access ramp, see "Railing Layout" sheets.

CONTRACT CHANGE ORDER NO. _____
SHEET ____ OF ____

REQUESTS FOR INFORMATION NOT ADDRESSED IN THIS CCO REMAIN IN FORCE

ALL DIMENSIONS ARE IN MILLIMETERS UNLESS OTHERWISE SHOWN

R. Valizadeh/V. Toan/Y.L./W.L./F.C.
DESIGN OVERSIGHT
SIGN OFF DATE 11/08/11

MARK	DATE	DESCRIPTIONS	BY	CH'D	CCO#
0	11/08/11	CABLE RAILING	GB	TH	188

REVISIONS

	BY	CHECKED
DESIGN	G. Baker	T. Ho
DETAILS	G. Baker	T. Ho
QUANTITIES	G. Baker	T. Ho

PREPARED FOR THE STATE OF CALIFORNIA DEPARTMENT OF TRANSPORTATION

R. Manzanarez
PROJECT ENGINEER

BRIDGE NO. 34-0006L/R
KILOMETER POST 13.2/13.9

SAN FRANCISCO OAKLAND BAY BRIDGE
EAST SPAN SEISMIC SAFETY PROJECT
SELF-ANCHORED SUSPENSION BRIDGE
(SUPERSTRUCTURE & TOWER)

TYPICAL GIRDER DETAILS NO. 17D

Rev. Date: 5-18-98

ORIGINAL SCALE IN MILLIMETERS FOR REDUCED PLANS 0 10 20 30 40 50 60 70 80 90 100

CU 04
EA 0120F1

DISREGARD PRINTS BEARING EARLIER REVISION DATES 11/08/11

REVISION DATES (PRELIMINARY STAGE ONLY)

SHEET 224S4 OF

FILE => I:\bb\04-012001\sas\contract plans and cco\cco\cco*188\3-revision 11-08-11\dgn\agdkd06h.dgn

100 % PS&E

USERNAME => arivera DATE PLOTTED => 08 NOV 2011 TIME PLOTTED => 08:18:29

DIST.	COUNTY	ROUTE	KILOMETER POST TOTAL PROJECT	SHEET NO.	TOTAL SHEETS
04	SF	80	13.2/13.9	805R2	1204

Caltrans Metric

George Baker
REGISTERED ENGINEER - CIVIL
12-6-04
PLANS APPROVAL DATE

REGISTERED PROFESSIONAL ENGINEER George S. Baker No. C 57112 Exp. 12/31/05 CIVIL STATE OF CALIFORNIA

The State of California or its officers or agents shall not be responsible for the accuracy or completeness of electronic copies of this plan sheet.

T.Y. LIN / MOFFATT & NICHOL
825 BATTERY STREET
SAN FRANCISCO, CA 94111

Caltrans now has a web site! To get to the web site, go to: http://www.dot.ca.gov

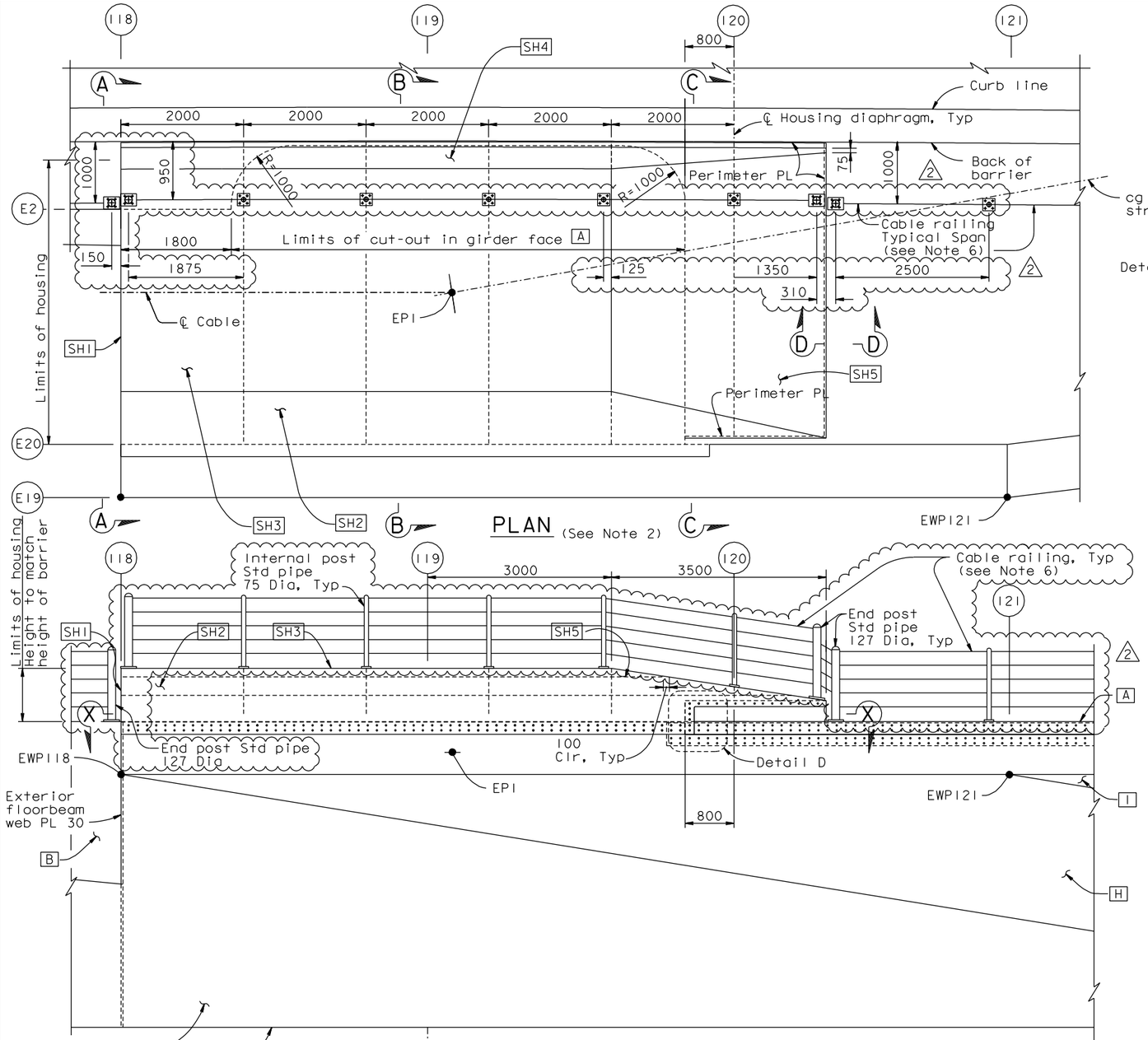

ELEVATION
EAST SADDLE HOUSING
1:40

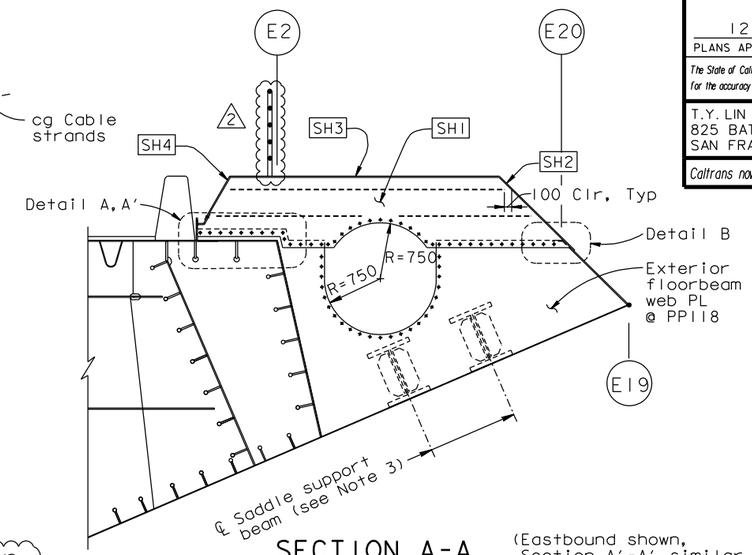

SECTION A-A
1:40
(Eastbound shown, Section A'-A' similar and opposite hand)

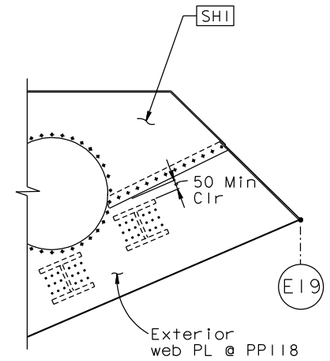

ALTERNATIVE SECTION A-A (See Note 7)
1:40

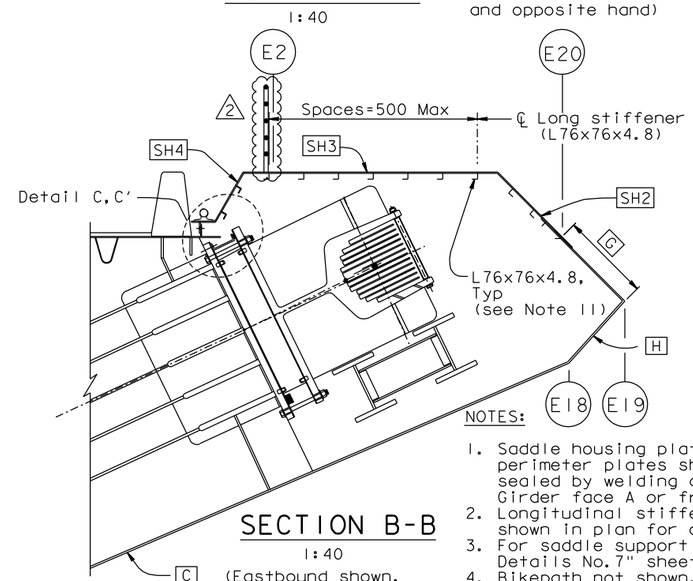

SECTION B-B
1:40
(Eastbound shown, Section B'-B' similar and opposite hand)

LEGEND:

SH5 Saddle Housing Plate 5

C Girder face C

NOTES:

1. Saddle housing plates SH1 through SH5 and all perimeter plates shall be 10 mm thick and shall be sealed by welding against any entry of water from Girder face A or from above.
2. Longitudinal stiffeners in saddle housing are not shown in plan for clarity.
3. For saddle support beam details, see "East Saddle Details No.7" sheet.
4. Bikepath not shown. For bikepath details, see "Bikepath Details" sheets.
5. For Sections C-C, D-D and Details A, B and C, see "East Saddle Housing Details No.2" sheet.
6. For cable railing details, see "Typical Girder Details No.17A" sheet. (△2)
7. At the Contractor's option, it is acceptable to use "Alternative Section A-A" in lieu of Section A-A".
8. For Detail D and Section X-X, see "East Saddle Housing Details No. 1A" sheet.
9. For architectural splice details, see "Girder At East Transition Details No.3" sheet.
10. For Details A' and C', see "East Saddle Housing Details No.2" sheet.
11. At the Contractor's option, ASTM A572 Gr. 345 or ASTM A529 Gr. 345 may be substituted for ASTM A709 Gr. 345 for the L76x76x4.8 angles, subject to review and approval of the Engineer.

ALL DIMENSIONS ARE IN MILLIMETERS UNLESS OTHERWISE SHOWN

Daniel J. Turner
REGISTERED PROFESSIONAL ENGINEER Daniel J. Turner No. C 65033 Exp. 06/30/13 CIVIL STATE OF CALIFORNIA

FOR REVISIONS ONLY

CONTRACT CHANGE ORDER NO. ____
SHEET ___ OF ___

REQUESTS FOR INFORMATION NOT ADDRESSED IN THIS CCO REMAIN IN FORCE

R. Valizadeh/V. Toan/Y.L./W.L./F.C.
DESIGN OVERSIGHT
Roya Valizadeh / Vonal Toan / Y. Liu
SIGN OFF DATE 11/08/11

MARK	DATE	DESCRIPTIONS	BY	CH'D	CCO#
2	11/08/11	CABLE RAILING	DT	MN	188
1	09/01/11	EAST END OBG	GB	MN	87

REVISIONS

DESIGN	BY G. Baker	CHECKED	T. McMeans
DETAILS	BY C. Mauch	CHECKED	T. McMeans
QUANTITIES	BY C. Mauch	CHECKED	D. Harrison

PREPARED FOR THE STATE OF CALIFORNIA DEPARTMENT OF TRANSPORTATION

R. Manzanarez
PROJECT ENGINEER

BRIDGE NO. 34-0006L/R
KILOMETER POST 13.2/13.9

SAN FRANCISCO OAKLAND BAY BRIDGE
EAST SPAN SEISMIC SAFETY PROJECT
SELF-ANCHORED SUSPENSION BRIDGE
(SUPERSTRUCTURE & TOWER)

EAST SADDLE HOUSING DETAILS NO. 1

Rev. Date: 5-18-98

ORIGINAL SCALE IN MILLIMETERS FOR REDUCED PLANS 0 10 20 30 40 50 60 70 80 90 100

CU 04
EA 0120F1

DISREGARD PRINTS BEARING EARLIER REVISION DATES

REVISION DATES (PRELIMINARY STAGE ONLY) 5/15/99 08/02/99 05/31/01 04/08/02 07/01/02 12/19/02

SHEET 388R2 OF

FILE => I:\bb\04-012001\sas\contract plans and cco\cco\cco#188\3-revision 11-08-11\dgn\agshd05.dgn

USERNAME => arivera DATE PLOTTED => 08 NOV 2011 TIME PLOTTED => 08:19:10

100 % PS&E

DIST.	COUNTY	ROUTE	KILOMETER POST TOTAL PROJECT	SHEET NO.	TOTAL SHEETS
04	SF	80	13.2/13.9	904R4	1204

Caltrans Metric

REGISTERED ENGINEER - CIVIL

12-6-04
PLANS APPROVAL DATE

REGISTERED PROFESSIONAL ENGINEER Tien Hung Ho No. C 43990 Exp. 06/30/13 CIVIL STATE OF CALIFORNIA

The State of California or its officers or agents shall not be responsible for the accuracy or completeness of electronic copies of this plan sheet.

T.Y. LIN / MOFFATT & NICHOL
825 BATTERY STREET
SAN FRANCISCO, CA 94111

Caltrans now has a web site! To get to the web site, go to: http://www.dot.ca.gov

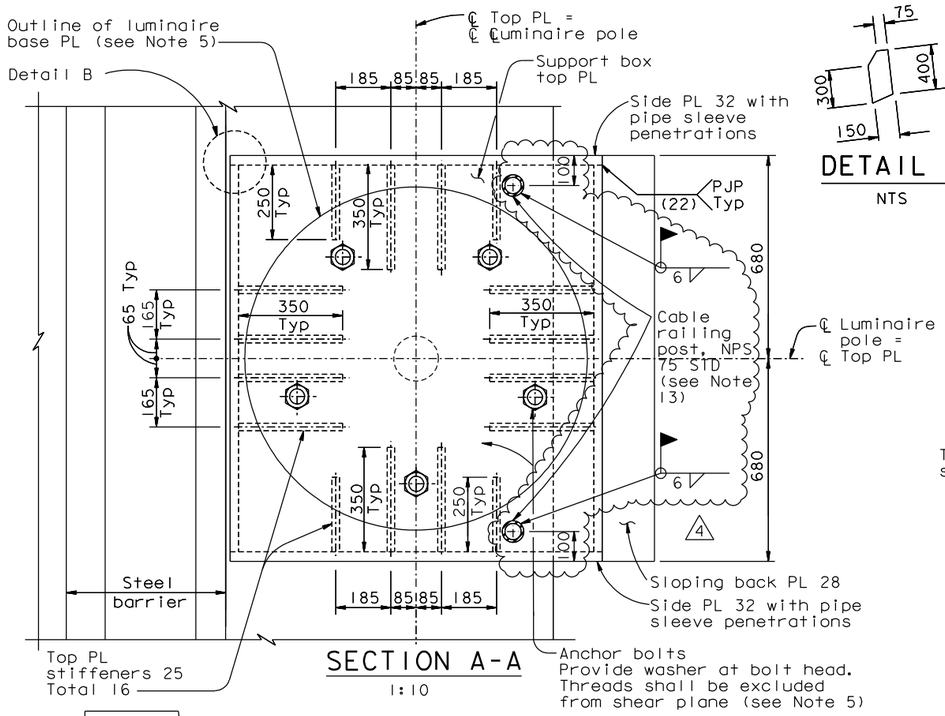

SECTION A-A
1:10

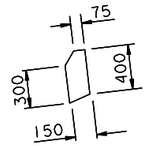

DETAIL A
NTS

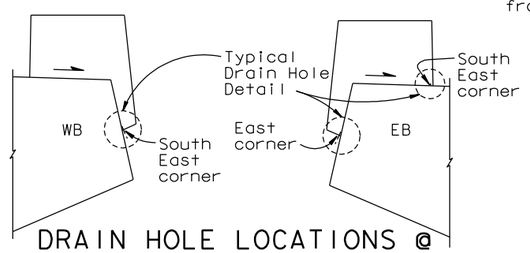

DRAIN HOLE LOCATIONS @ TYPICAL LUMINAIRE AND SIGN SUPPORT BOX
NTS

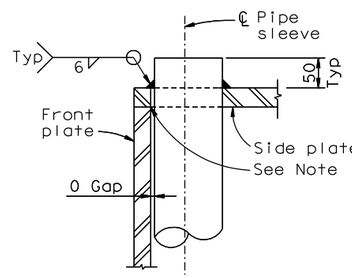

DETAIL B
1:5

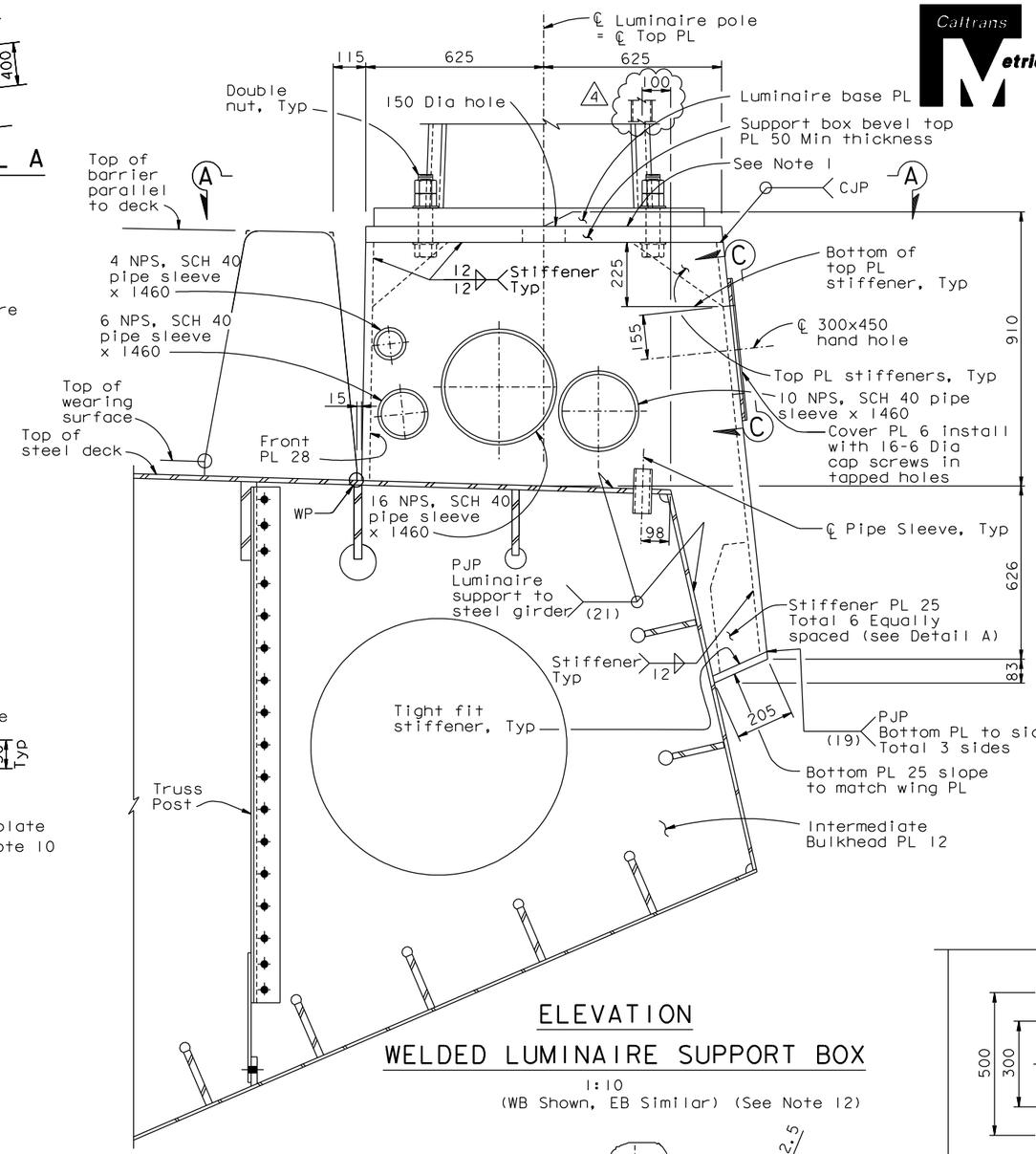

ELEVATION
WELDED LUMINAIRE SUPPORT BOX
1:10
(WB Shown, EB Similar) (See Note 12)

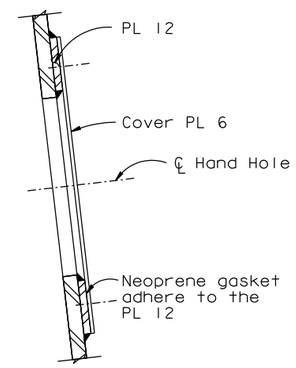

SECTION D-D
1:5

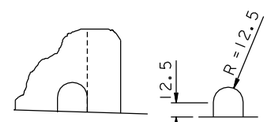

TYPICAL DRAIN HOLE DETAIL
1:2.5

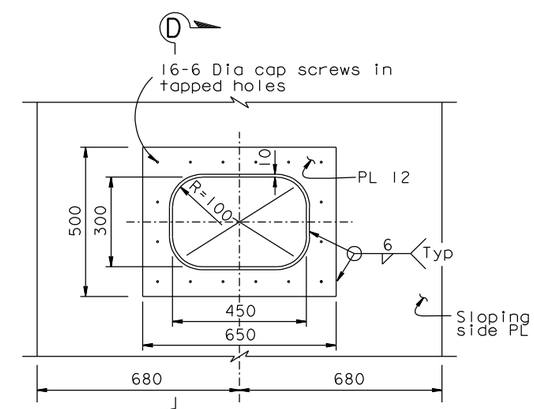

(6x500x650 cover PL not shown for clarity)

VIEW C-C
1:10

NOTES:

1. Surfaces of plates shall be milled level to ensure bearing.
2. For location of pipe sleeves, see "Road Plans".
3. The Contractor shall submit for approval by the Engineer details of conduit penetration through deck plate. Conduit penetration details shall be completely sealed to ensure no water leakage into support box.
4. For Geometry of luminaire base plate, conduit openings and locations of bolts, see "Road Plans".
5. For details of utilities opening through luminaire support box, see "Road Plans".
6. Pipe sleeves shall be completely sealed at support box side plates to ensure no water leakage into support box.
7. For location of luminaire, see "Road Plans" sheets.
8. Pipe sleeves shall typically be concentric with the carried utility line. For utility locations, see the "Road Plans". For 4 NPS pipe sleeve, place the sleeve with 0 gap at the face of support box front plate, and aligned vertically on the utility line.
9. The side plates are normal to the deck.
10. Grind weld flush at pipe sleeve.
11. Pipe sleeve locations for pedestals @ PP 119 and sign post, see "Road Plans".
12. At locations where cable railing interferes with luminaire support box, terminate railing at eye bolts, each side of support box, subject to review and approval of the Engineer.
13. For cable railing details, see "Typical Girder Details 17C" sheet.

4

CONTRACT CHANGE ORDER NO. ____
SHEET ____ OF ____

REQUESTS FOR INFORMATION NOT ADDRESSED IN THIS CCO REMAIN IN FORCE

MARK	DATE	DESCRIPTIONS	BY	CH'D	CCO#
4	11/08/11	CABLE RAILING	DT	TH	188
3	10/31/08	BARRIER MODIFICATIONS	GB	TH	44
2	06/13/08	BARRIER MODIFICATIONS	GB	TH	44
1	08/24/07	BARRIER MODIFICATIONS	GB	TH	44

REVISIONS

R. Valizadeh/V. Toan/Y.L./W.L./F.C.
DESIGN OVERSIGHT
Roya Valizadeh / Vonn Toan / Y. Liu
SIGN OFF DATE 11/08/11

DESIGN	BY T. Ho	CHECKED C. Redfield	
DETAILS	BY R. Xu	CHECKED C. Redfield	
QUANTITIES	BY C. Mauch	CHECKED K. Cormier	

PREPARED FOR THE STATE OF CALIFORNIA DEPARTMENT OF TRANSPORTATION

R. Manzanarez
PROJECT ENGINEER

BRIDGE NO. 34-0006L/R
KILOMETER POST 13.2/13.9

ALL DIMENSIONS ARE IN MILLIMETERS UNLESS OTHERWISE SHOWN

SAN FRANCISCO OAKLAND BAY BRIDGE
EAST SPAN SEISMIC SAFETY PROJECT
SELF-ANCHORED SUSPENSION BRIDGE
(SUPERSTRUCTURE & TOWER)

LUMINAIRE SUPPORT DETAILS NO. 1

Rev. Date: 5-18-98

ORIGINAL SCALE IN MILLIMETERS FOR REDUCED PLANS 0 10 20 30 40 50 60 70 80 90 100

CU 04
EA 0120F1

DISREGARD PRINTS BEARING EARLIER REVISION DATES

REVISION DATES (PRELIMINARY STAGE ONLY) 05/31/01 04/08/02 07/01/02 12/13/02 11/13/05

SHEET 487R4 OF

FILE => I:\bb\04-012001\sas\contract plans and cco\cco\cco*188\3-revision 11-08-11\dgn\akiht08.dgn

100 % PS&E

USERNAME => arivera DATE PLOTTED => 08 NOV 2011 TIME PLOTTED => 08:28:43

DIST.	COUNTY	ROUTE	KILOMETER POST TOTAL PROJECT	SHEET NO.	TOTAL SHEETS
04	SF	80	13.2/13.9	908R2	1204

REGISTERED ENGINEER - CIVIL

12-6-04
PLANS APPROVAL DATE

REGISTERED PROFESSIONAL ENGINEER Tien Hung Ho No. C 43990 Exp. 06/30/13 CIVIL STATE OF CALIFORNIA

The State of California or its officers or agents shall not be responsible for the accuracy or completeness of electronic copies of this plan sheet.

T.Y. LIN / MOFFATT & NICHOL
825 BATTERY STREET
SAN FRANCISCO, CA 94111

Caltrans now has a web site! To get to the web site, go to: http://www.dot.ca.gov

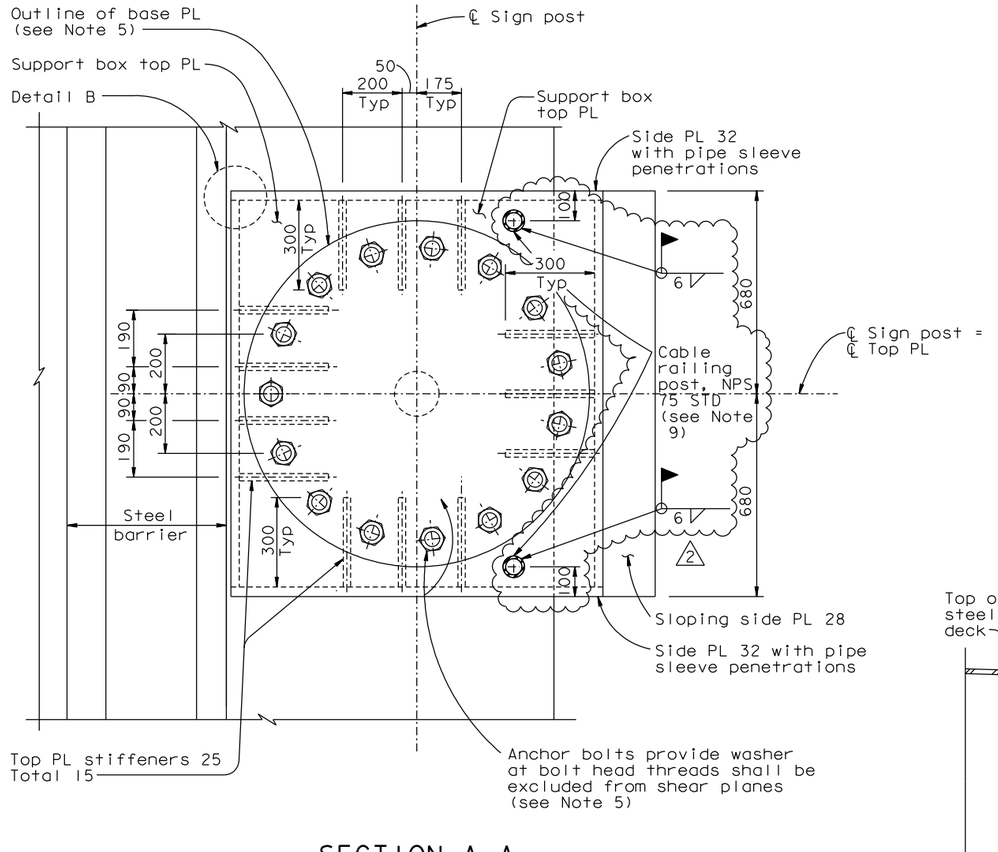

SECTION A-A

1:10

NOTES:

1. Surfaces of plates shall be milled level to ensure bearing.
2. For location of pipe sleeves, see "Road Plans".
3. The Contractor shall submit for approval by the Engineer details of conduit penetration through deck plate. Conduit penetration details shall be completely sealed to ensure no water leakage into support box.
4. For details of utilities opening thru sign support box, see "Road Plans".
5. For geometry of base plate, conduit opening and locations of bolts, see "Road Plans".
6. Pipe sleeves shall be completely sealed at support box side plates to ensure no water leakage into support box.
7. For Detail B, View C-C and drain hole locations, see "Luminaire Support Details No.1" sheet.
8. For details of cable railing termination at sign support, see "Typical Girder Details No.17C" sheet. (2)
9. For cable railing details, see "Typical Girder Details No.17C" sheet.

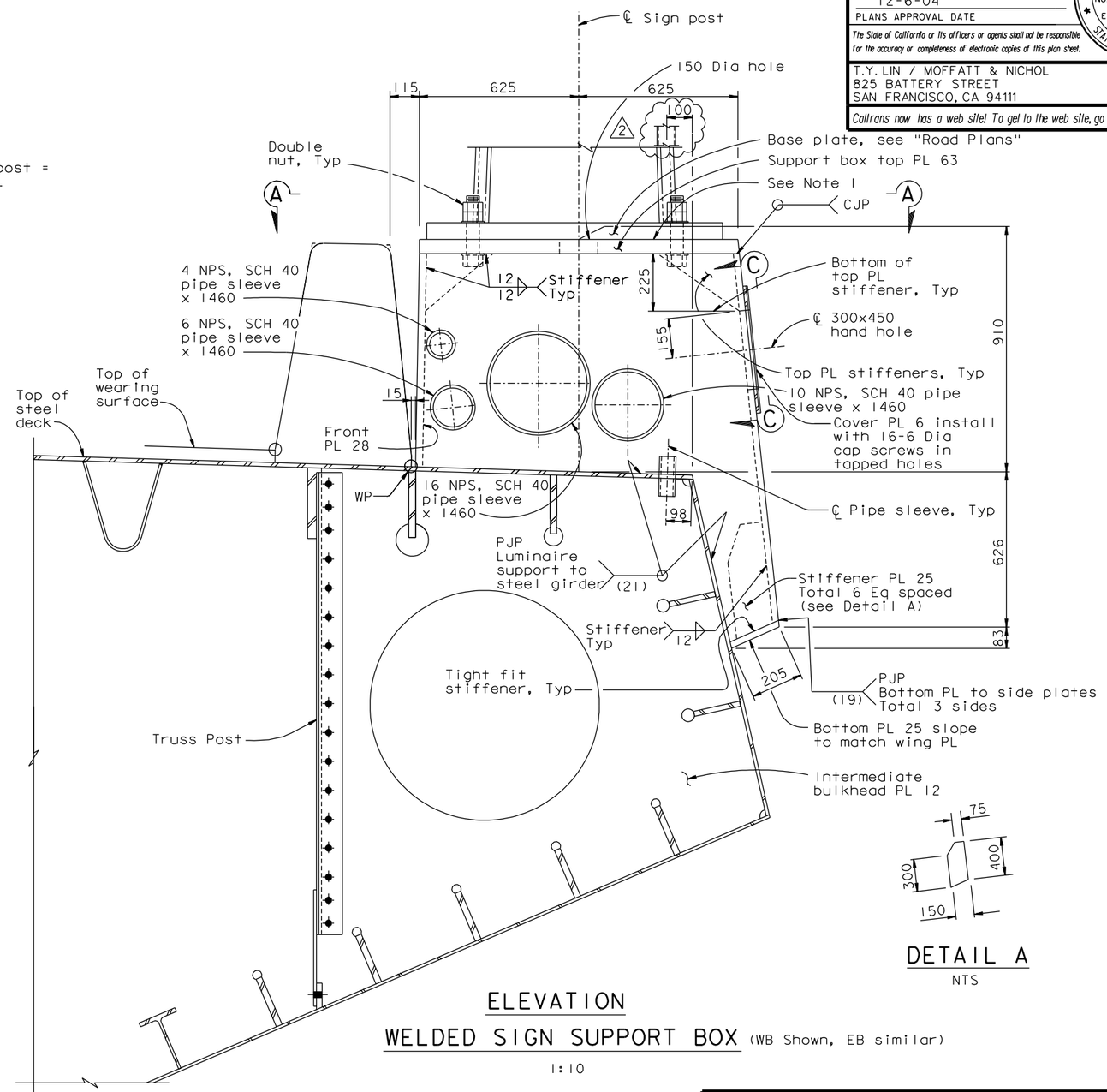

ELEVATION

WELDED SIGN SUPPORT BOX (WB Shown, EB similar)

1:10

DETAIL A

NTS

ALL DIMENSIONS ARE IN MILLIMETERS UNLESS OTHERWISE SHOWN

CONTRACT CHANGE ORDER NO. _____
SHEET ____ OF ____

REQUESTS FOR INFORMATION NOT ADDRESSED IN THIS CCO REMAIN IN FORCE

MARK	DATE	DESCRIPTIONS	BY	CH'D	CCO#
2	11/08/11	CABLE RAILING	DT	TH	188
1	10/31/08	BARRIER MODIFICATIONS	AS	TH	44

REVISIONS

R. Valizadeh/V. Toan/Y.L./W.L./F.C.
DESIGN OVERSIGHT
SIGN OFF DATE 11/08/11

	BY	CHECKED
DESIGN	T. Ho	C. Redfield
DETAILS	R. Xu	C. Redfield
QUANTITIES	C. Mauch	K. Cormier

PREPARED FOR THE STATE OF CALIFORNIA DEPARTMENT OF TRANSPORTATION

R. Manzanarez
PROJECT ENGINEER

BRIDGE NO. 34-0006L/R
KILOMETER POST 13.2/13.9

SAN FRANCISCO OAKLAND BAY BRIDGE
EAST SPAN SEISMIC SAFETY PROJECT
SELF-ANCHORED SUSPENSION BRIDGE
(SUPERSTRUCTURE & TOWER)

SIGN SUPPORT DETAILS

Rev. Date: 5-18-98

ORIGINAL SCALE IN MILLIMETERS FOR REDUCED PLANS 0 10 20 30 40 50 60 70 80 90 100

CU 04
EA 0120F1

DISREGARD PRINTS BEARING EARLIER REVISION DATES

REVISION DATES (PRELIMINARY STAGE ONLY) 04/08/02 01/07/02 12/19/02

SHEET 491R2 OF

FILE => I:\bb\04-012001\sas\contract plans and cco\cco\cco#188\3-revision 11-08-11\dgn\akssd01.dgn

USERNAME => arivera DATE PLOTTED => 08 NOV 2011 TIME PLOTTED => 08:29:14

100% PS&E

DIST.	COUNTY	ROUTE	KILOMETER POST TOTAL PROJECT	SHEET NO.	TOTAL SHEETS
04	SF	80	13.2/13.9	909SIRI	1204

REGISTERED ENGINEER - CIVIL

03-25-11

PLANS APPROVAL DATE

REGISTERED PROFESSIONAL ENGINEER James P.Duxbury No. C 64677 Exp. 06/30/13 CIVIL STATE OF CALIFORNIA

The State of California or its officers or agents shall not be responsible for the accuracy or completeness of electronic copies of this plan sheet.

T.Y. LIN / MOFFATT & NICHOL
825 BATTERY STREET
SAN FRANCISCO, CA 94111

Caltrans now has a web site! To get to the web site, go to: http://www.dot.ca.gov

Caltrans Metric

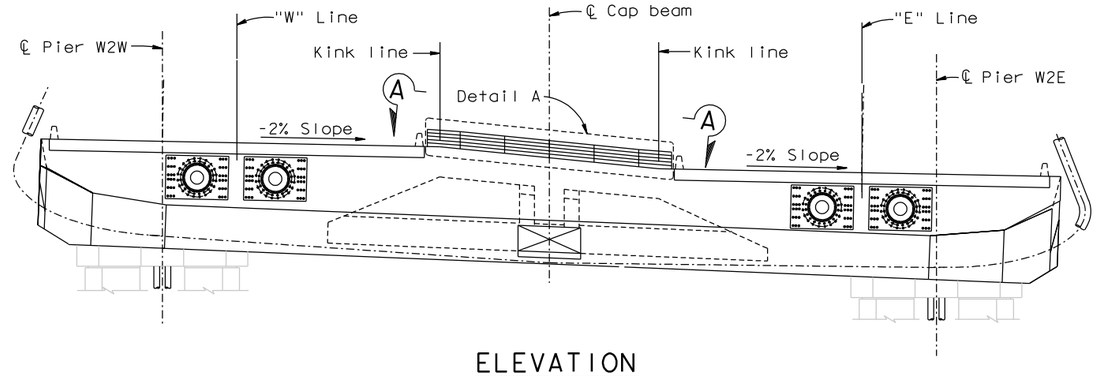

ELEVATION
1:200

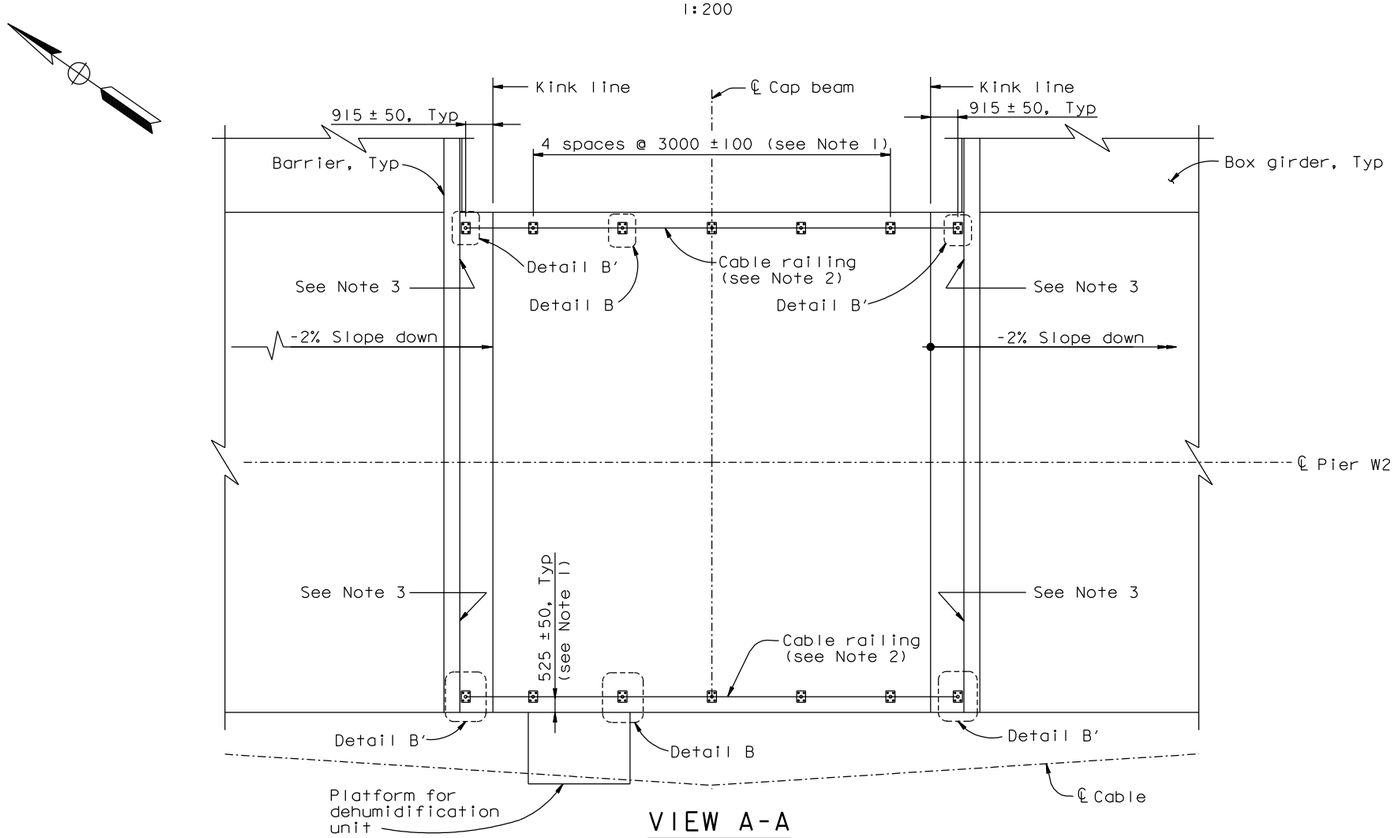

VIEW A-A

W2 CAP BEAM CABLE RAILING PLAN
1:100

NOTES:

1. The Contractor shall field verify the location of existing rebars before drilling for the anchor rod installation. The Contractor shall not drill through the rebar.
2. For details of railing posts, struts, cables and cable hardware, see "Typical Girder Details No.17A" sheet. For base details, see "Pier W2 Access Details No.3" sheet.
3. NOT FOR TIE-OFF

   The cable railing shall not be used as a tie-off rail. Post this information on a stainless steel plaque (200x300 minimum) on back side of the barrier at the locations shown. Plaques shall be mounted to the barrier using 6 mm (1/4") Dia stainless cap screws. Plaque and mounting details shall be submitted for Engineer's review and approval.
4. For Details A, B and B', see "Pier W2 Access Details No.3" sheet.

100% PS&E

CONTRACT CHANGE ORDER NO. ____
SHEET ____ OF ____

REQUESTS FOR INFORMATION NOT ADDRESSED IN THIS CCO REMAIN IN FORCE

ALL DIMENSIONS ARE IN MILLIMETERS UNLESS OTHERWISE SHOWN

R. Valizadeh/V. Toan/Y.L./W.L./F.C.
DESIGN OVERSIGHT
Roya Valizadeh / Vong Toan / Y. Liu
SIGN OFF DATE 11/08/11

MARK	DATE	DESCRIPTIONS	BY	CH'D	CCO#
1	11/08/11	CABLE RAILING	DT	JD	188
0	03/25/11	W2-OBG SAFETY CABLE	CC	JD	188

REVISIONS

DESIGN	BY C. Choi	CHECKED J. Duxbury	
DETAILS	BY L. Motal	CHECKED D. Turner	
QUANTITIES	BY L. Motal	CHECKED D. Turner	

PREPARED FOR THE STATE OF CALIFORNIA DEPARTMENT OF TRANSPORTATION

R. Manzanarez
PROJECT ENGINEER

BRIDGE NO. 34-0006L/R
KILOMETER POST 13.2/13.9

SAN FRANCISCO OAKLAND BAY BRIDGE
EAST SPAN SEISMIC SAFETY PROJECT
SELF-ANCHORED SUSPENSION BRIDGE
(SUPERSTRUCTURE & TOWER)

PIER W2 ACCESS DETAILS NO. 2

Rev. Date: 5-18-98

ORIGINAL SCALE IN MILLIMETERS FOR REDUCED PLANS 0 10 20 30 40 50 60 70 80 90 100

CU 04
EA 0120F1

DISREGARD PRINTS BEARING EARLIER REVISION DATES

REVISION DATES (PRELIMINARY STAGE ONLY) 03/25/11

SHEET 492SIRI OF

FILE => I:\bb\04-01200I\sas\contract plans and cco\cco\cco#188\3-revision 11-08-11\dgn\akacc01a.dgn

USERNAME => orivera DATE PLOTTED => 08 NOV 2011 TIME PLOTTED => 08:20:36

DIST.	COUNTY	ROUTE	KILOMETER POST TOTAL PROJECT	SHEET NO.	TOTAL SHEETS
04	SF	80	13.2/13.9	909S2R1	1204

REGISTERED ENGINEER - CIVIL

03-25-11

PLANS APPROVAL DATE

REGISTERED PROFESSIONAL ENGINEER James P. Duxbury No. C 64677 Exp. 06/30/13 CIVIL STATE OF CALIFORNIA

The State of California or its officers or agents shall not be responsible for the accuracy or completeness of electronic copies of this plan sheet.

T.Y. LIN / MOFFATT & NICHOL
825 BATTERY STREET
SAN FRANCISCO, CA 94111

Caltrans now has a web site! To get to the web site, go to: http://www.dot.ca.gov

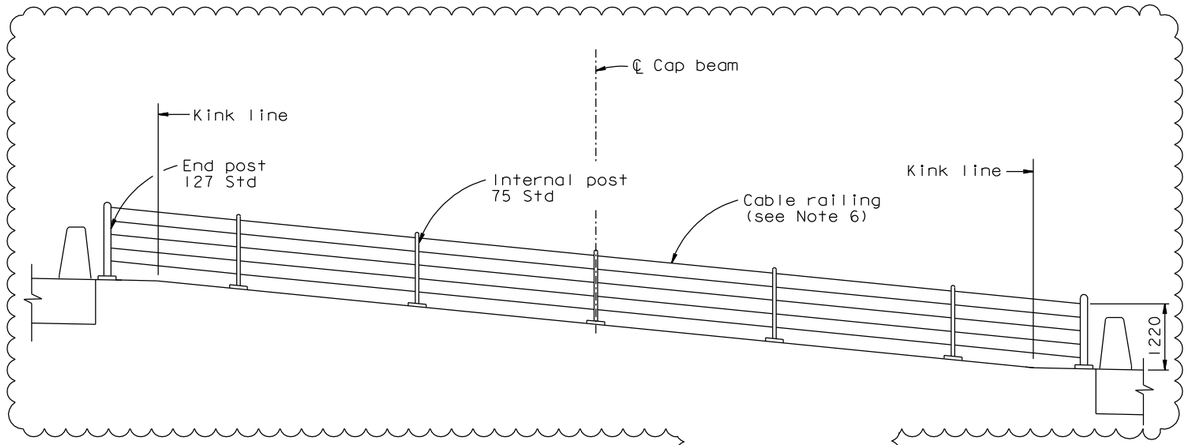

DETAIL A
1:50

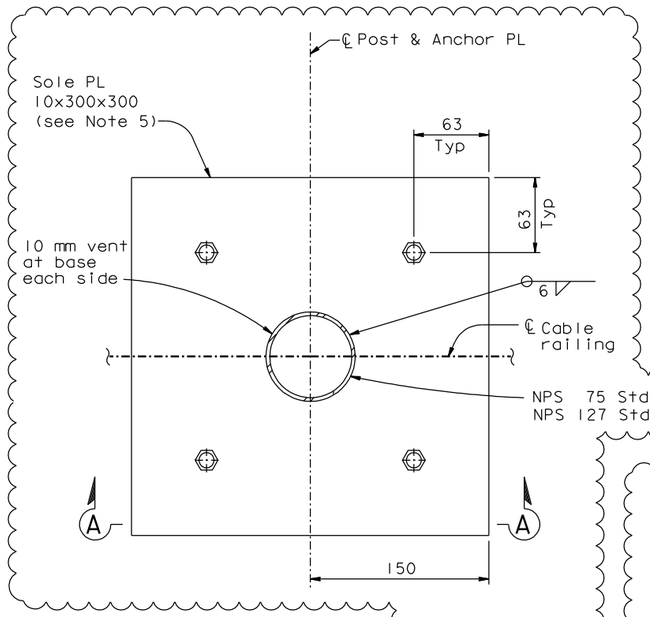

DETAIL B
1:2.5

(Detail B' Similar)

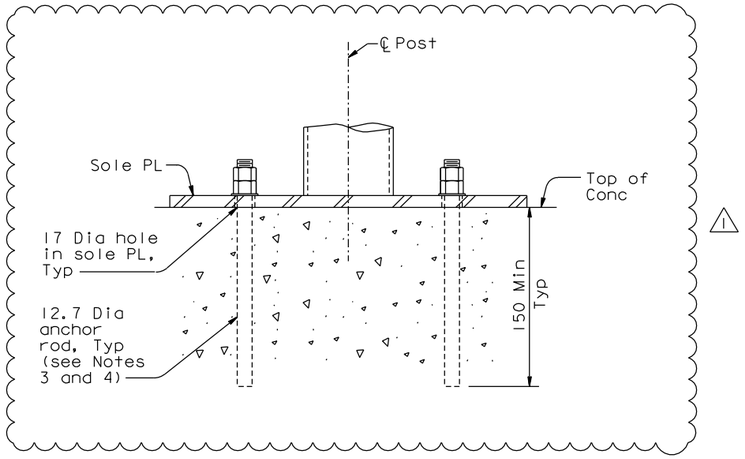

SECTION A-A
1:2.5

NOTES:

1. For layout of cable, see "Pier W2 Access Details No.2" sheet.
2. Sole plates and anchor plates shall have a minimum yield strength of Fy=50 ksi (345 MPa) and shall be A572 or equivalent.
3. Anchoring system shall be Hilti HIT-RE 500-SD Epoxy Adhesive Anchoring system with Hilti HAS-R 316 SS all threaded rod (Fu > 690 MPa), or equivalent.
4. Anchor rods and epoxy shall be installed per manufacturer's recommendations.
5. Assemblies, including underside of sole PL, shall be galvanized and painted.
6. The Pier W2 cable railing is similar to the typical crossbeam line cable railing. For details of railing posts, struts, cables and cable hardware, see "Typical Girder Details No.17A" sheet.

CONTRACT CHANGE ORDER NO. _____
SHEET ____ OF ____

REQUESTS FOR INFORMATION NOT ADDRESSED IN THIS CCO REMAIN IN FORCE

ALL DIMENSIONS ARE IN MILLIMETERS UNLESS OTHERWISE SHOWN

R. Valizadeh/V. Toan/Y.L./W.L./F.C.
DESIGN OVERSIGHT
SIGN OFF DATE 11/08/11

MARK	DATE	DESCRIPTIONS	BY	CH'D	CCO#
1	11/08/11	CABLE RAILING	DT	JD	188
0	03/25/11	W2-OBG SAFETY CABLE	CC	JD	188

REVISIONS

	BY	CHECKED
DESIGN	C. Choi	J. Duxbury
DETAILS	L. Motal	C. Choi
QUANTITIES	L. Motal	C. Choi

PREPARED FOR THE STATE OF CALIFORNIA DEPARTMENT OF TRANSPORTATION

R. Manzanarez
PROJECT ENGINEER

BRIDGE NO. 34-0006L/R
KILOMETER POST 13.2/13.9

SAN FRANCISCO OAKLAND BAY BRIDGE
EAST SPAN SEISMIC SAFETY PROJECT
SELF-ANCHORED SUSPENSION BRIDGE
(SUPERSTRUCTURE & TOWER)

PIER W2 ACCESS DETAILS NO.3

Rev. Date: 5-18-98

ORIGINAL SCALE IN MILLIMETERS FOR REDUCED PLANS 0 10 20 30 40 50 60 70 80 90 100

CU 04
EA 0120F1

DISREGARD PRINTS BEARING EARLIER REVISION DATES 03/25/11

REVISION DATES (PRELIMINARY STAGE ONLY)

SHEET 492S2R1 OF

FILE => I:\bb\04-012001\sas\contract plans and cco\cco\cco#188\3-revision 11-08-11\dgn\akacc01b.dgn

100% PS&E

USERNAME => arivera DATE PLOTTED => 08 NOV 2011 TIME PLOTTED => 08:22:13

DIST.	COUNTY	ROUTE	KILOMETER POST TOTAL PROJECT	SHEET NO.	TOTAL SHEETS
04	SF	80	13.2/13.9	941R2	1204

Caltrans Metric

George Baker
REGISTERED ENGINEER - CIVIL
12-6-04
PLANS APPROVAL DATE

REGISTERED PROFESSIONAL ENGINEER George S. Baker No. C 57112 Exp. 12/31/05 CIVIL STATE OF CALIFORNIA

The State of California or its officers or agents shall not be responsible for the accuracy or completeness of electronic copies of this plan sheet.

T.Y. LIN / MOFFATT & NICHOL
825 BATTERY STREET
SAN FRANCISCO, CA 94111

Caltrans now has a web site! To get to the web site, go to: http://www.dot.ca.gov

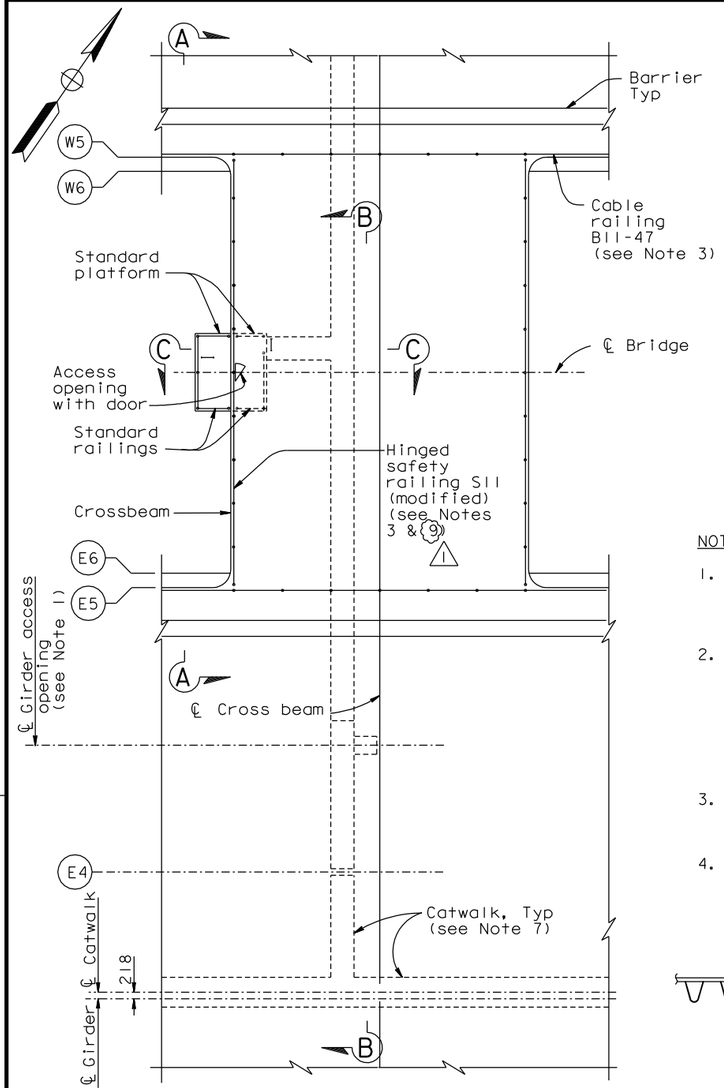

PLAN
1:100

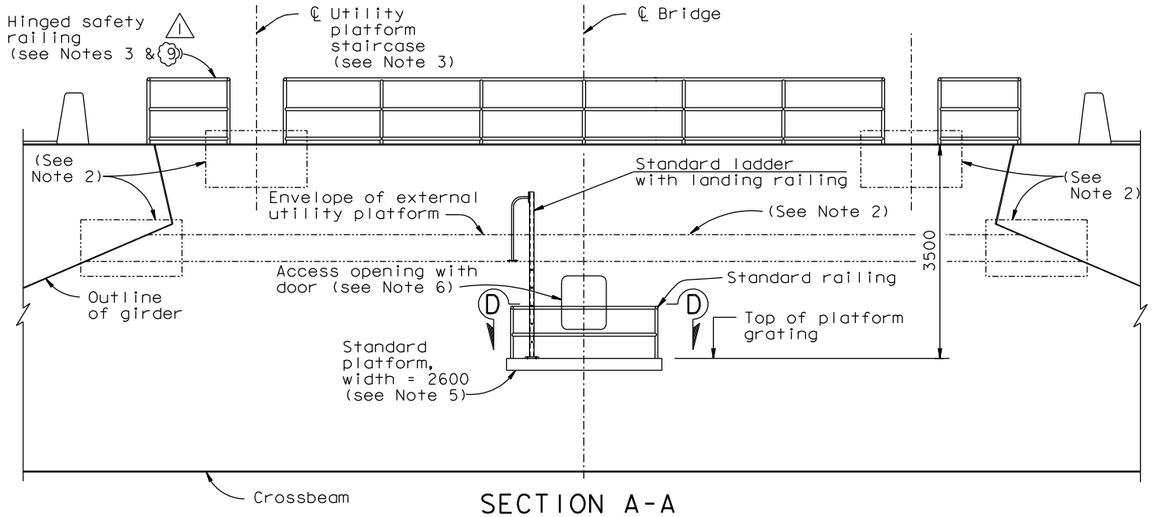

SECTION A-A
1:50

NOTES:

1. For girder access opening details, see "Typical Girder Details No.15" sheet. Provide grating with railing for 300 mm each side of opening.
2. All service platform, ladder, staircase and utility cabinet attachments to the crossbeams and girders shall conform to the fracture critical requirements of the specifications. No field welds will be permitted. All shop welded attachments shall be detailed with transition tapers as shown on "Typical Girder Details No.16" sheet.
3. Hinged safety railing shall be detailed with gaps to clear staircases. Cable railing shall be detailed with gaps to clear suspender brackets.
4. For utility layouts and service platform details, see "Road Plan" sheets.
5. For standard platform, ladder and railing details, see "Tower Access Details No.7", "Tower Access Details No.8" & "Tower Access Details No.10" sheets.
6. For exterior access opening in crossbeam, see "Typical Crossbeam Details No. 6" sheet. For door details, see Section D-D on "Girder Access Details No.8" sheet. Cowling shall be omitted.
7. For catwalk details, see "Girder Access Details No.2" sheet.
8. Channel 75 ladder rails shall be 500 mm back-to-back. Landing handrails shall be spaced at 500 mm clear or greater.
9. Crossbeam Cable Railing Alternate Plan may be used, see "Crossbeam Access Detail No.3A" sheet.

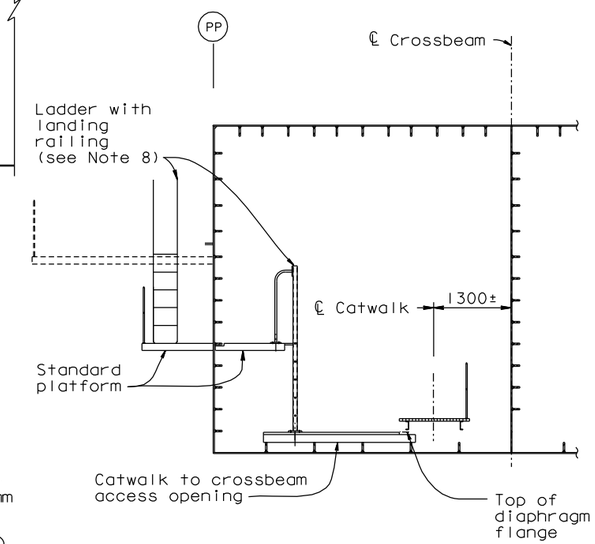

SECTION C-C
1:50

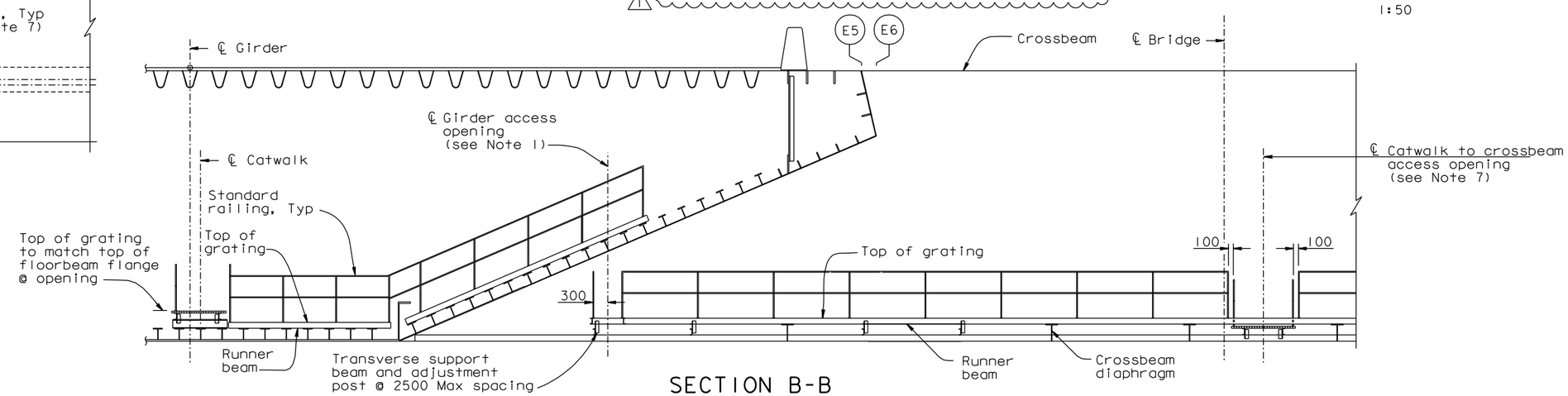

SECTION B-B
1:50

CATWALK TO CROSSBEAM

ACCESS OPENING LOCATIONS
PP
14
32
50
80
110

REGISTERED PROFESSIONAL ENGINEER Daniel J. Turner No. C 65033 Exp. 06/30/13 CIVIL STATE OF CALIFORNIA

FOR REVISIONS ONLY

CONTRACT CHANGE ORDER NO. ____
SHEET ___ OF ___

REQUESTS FOR INFORMATION NOT ADDRESSED IN THIS CCO REMAIN IN FORCE

ALL DIMENSIONS ARE IN MILLIMETERS UNLESS OTHERWISE SHOWN

R. Valizadeh/V. Toan/Y.L./W.L./F.C.
DESIGN OVERSIGHT
SIGN OFF DATE 11/08/11

MARK	DATE	DESCRIPTIONS	BY	CH'D	CCO#
2	11/08/11	CABLE RAILING	DT	GB	188
1	03/25/11	W2-OBG SAFETY CABLE	CC	DT	188

REVISIONS

	BY	CHECKED
DESIGN	G. Baker	T. McMeans
DETAILS	C. Mauch	T. McMeans
QUANTITIES	C. Mauch	J. Leventini

PREPARED FOR THE STATE OF CALIFORNIA DEPARTMENT OF TRANSPORTATION

R. Manzanarez
PROJECT ENGINEER

BRIDGE NO. 34-0006L/R
KILOMETER POST 13.2/13.9

SAN FRANCISCO OAKLAND BAY BRIDGE
EAST SPAN SEISMIC SAFETY PROJECT
SELF-ANCHORED SUSPENSION BRIDGE
(SUPERSTRUCTURE & TOWER)

GIRDER ACCESS DETAILS NO. 1

Rev. Date: 5-18-98

ORIGINAL SCALE IN MILLIMETERS FOR REDUCED PLANS 0 10 20 30 40 50 60 70 80 90 100

CU 04
EA 0120F1

DISREGARD PRINTS BEARING EARLIER REVISION DATES

REVISION DATES (PRELIMINARY STAGE ONLY) 05/15/99 08/02/99 05/31/01 04/08/02 07/01/02 12/19/02

SHEET 524R2 OF

FILE => I:\bb\04-012001\sas\contract plans and cco\cco\cco#188\3-revision 11-08-11\dgn\akaccl1a.dgn

100% PS&E

USERNAME => arivera DATE PLOTTED => 08 NOV 2011 TIME PLOTTED => 08:22:50

DIST.	COUNTY	ROUTE	KILOMETER POST TOTAL PROJECT	SHEET NO.	TOTAL SHEETS
04	SF	80	13.2/13.9	953R2	1204

REGISTERED ENGINEER - CIVIL

12-6-04

PLANS APPROVAL DATE

REGISTERED PROFESSIONAL ENGINEER Marwan N. Nader No. C 54426 Exp. 12/31/11 CIVIL STATE OF CALIFORNIA

The State of California or its officers or agents shall not be responsible for the accuracy or completeness of electronic copies of this plan sheet.

T.Y. LIN / MOFFATT & NICHOL
825 BATTERY STREET
SAN FRANCISCO, CA 94111

Caltrans now has a web site! To get to the web site, go to: http://www.dot.ca.gov

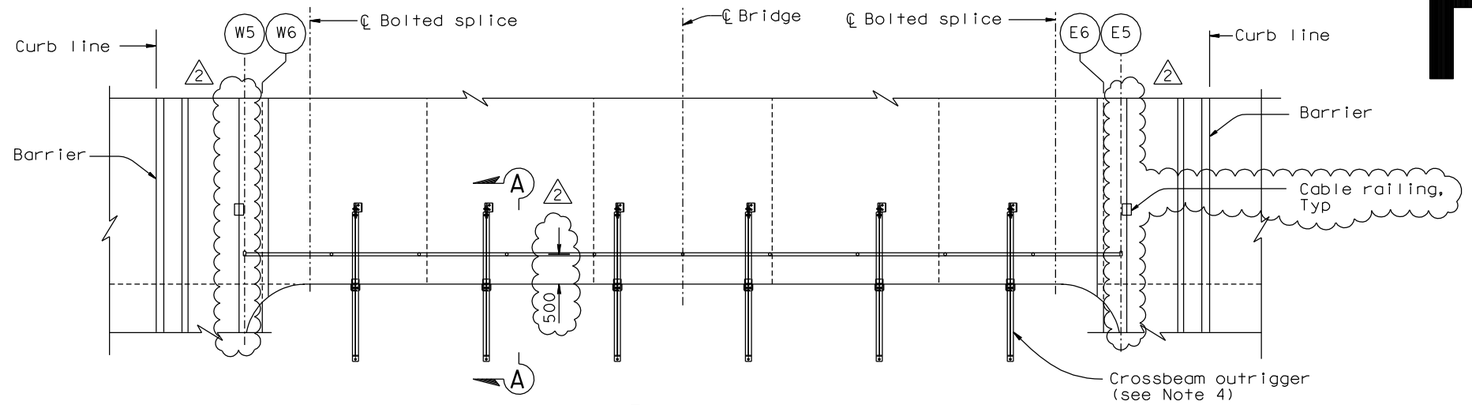

PLAN (Typical Crossbeam)
1:50

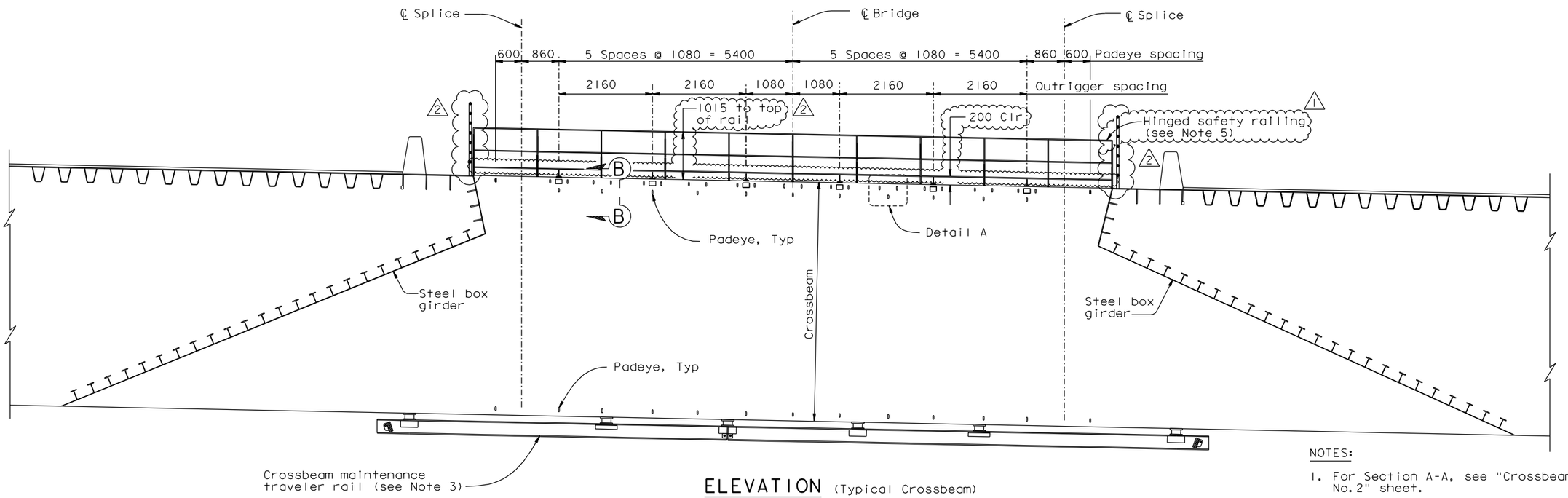

ELEVATION (Typical Crossbeam)
1:50

NOTES:

1. For Section A-A, see "Crossbeam Access Details No. 2" sheet.
2. For Detail A and Section B-B, see "Crossbeam Access Details No. 3" sheet.
3. For rail details, see "Crossbeam Access Details No. 4" sheet.
4. A total of 36 outriggers shall be furnished for maintenance of up to 3 crossbeams at a time.
5. Crossbeam Cable Railing Alternate Plan may be used, see "Crossbeam Access Detail No. 3A" sheet. (1) (2)

CONTRACT CHANGE ORDER NO. _____
SHEET ____ OF ____

REQUESTS FOR INFORMATION NOT ADDRESSED IN THIS CCO REMAIN IN FORCE

ALL DIMENSIONS ARE IN MILLIMETERS UNLESS OTHERWISE SHOWN

MARK	DATE	DESCRIPTIONS	BY	CH'D	CCO#
2	11/08/11	CABLE RAILING	DT	MN	188
1	03/25/11	W2-OBG SAFETY CABLE	DT	MN	188

REVISIONS

R. Valizadeh/V. Toan/Y.L./W.L./F.C.
DESIGN OVERSIGHT
SIGN OFF DATE 11/08/11

	BY	CHECKED
DESIGN	M. Nader	N. Vo
DETAILS	G. Baker	N. Vo
QUANTITIES	G. Baker	N. Vo

PREPARED FOR THE STATE OF CALIFORNIA DEPARTMENT OF TRANSPORTATION

R. Manzanarez
PROJECT ENGINEER

BRIDGE NO. 34-0006L/R
KILOMETER POST 13.2/13.9

SAN FRANCISCO OAKLAND BAY BRIDGE
EAST SPAN SEISMIC SAFETY PROJECT
SELF-ANCHORED SUSPENSION BRIDGE
(SUPERSTRUCTURE & TOWER)

CROSSBEAM ACCESS DETAILS NO. 1

Rev. Date: 5-18-98

ORIGINAL SCALE IN MILLIMETERS FOR REDUCED PLANS 0 10 20 30 40 50 60 70 80 90 100

CU 04
EA 0120F1

DISREGARD PRINTS BEARING EARLIER REVISION DATES 04/08/02 07/01/02 12/19/02

SHEET 536R2 OF

FILE => I:\bb\04-012001\sas\contract plans and cco\cco\cco#188\3-revision 11-08-11\dgn\akcad01.dgn

USERNAME => crivera DATE PLOTTED => 08 NOV 2011 TIME PLOTTED => 08:23:31

100 % PS&E

DIST.	COUNTY	ROUTE	KILOMETER POST TOTAL PROJECT	SHEET NO.	TOTAL SHEETS
04	SF	80	13.2/13.9	955R3	1204

REGISTERED ENGINEER - CIVIL

12-6-04

PLANS APPROVAL DATE

REGISTERED PROFESSIONAL ENGINEER Marwan N.Nader No. C 54426 Exp. 12/31/11 CIVIL STATE OF CALIFORNIA

The State of California or its officers or agents shall not be responsible for the accuracy or completeness of electronic copies of this plan sheet.

T.Y. LIN / MOFFATT & NICHOL
825 BATTERY STREET
SAN FRANCISCO, CA 94111

Caltrans now has a web site! To get to the web site, go to: http://www.dot.ca.gov

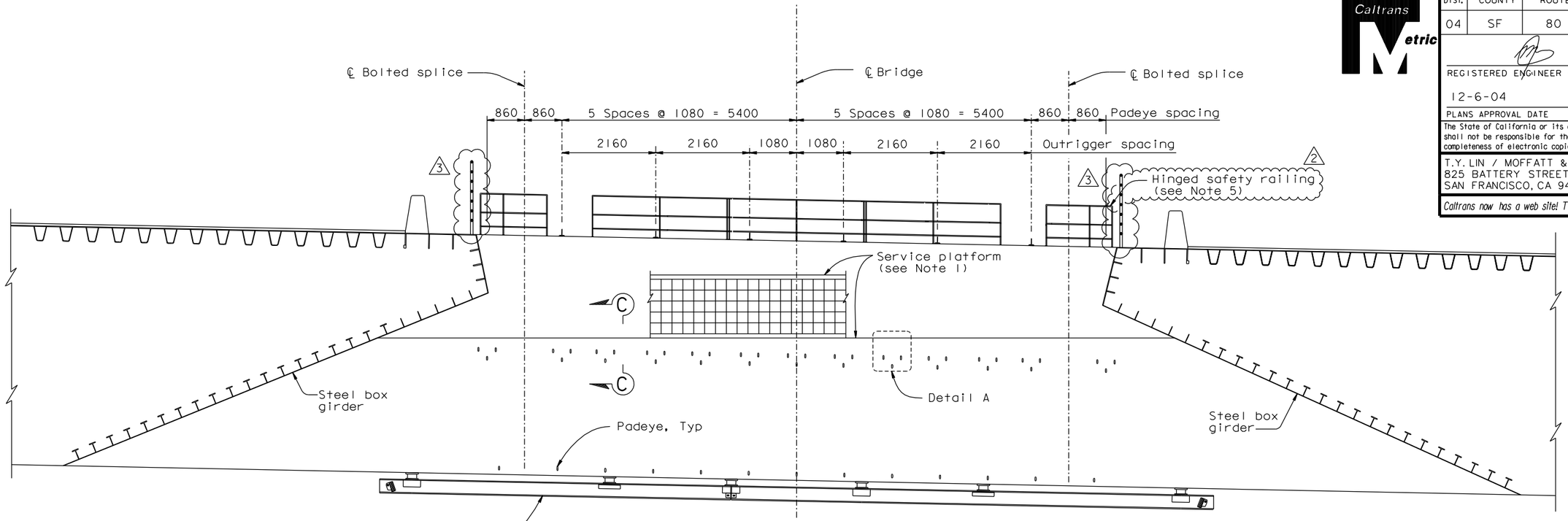

ELEVATION (Crossbeam with Service Platform)
1:50

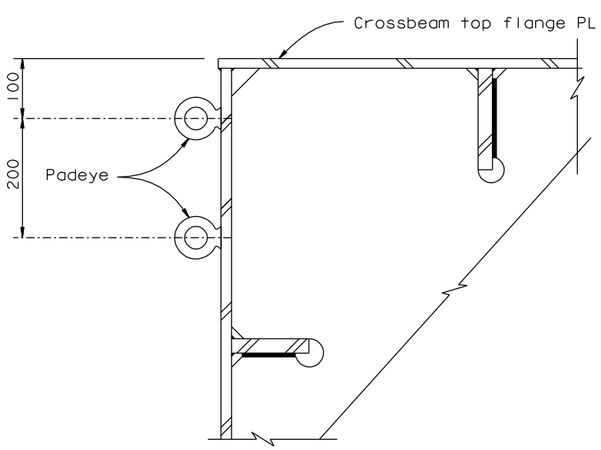

SECTION B-B
1:5

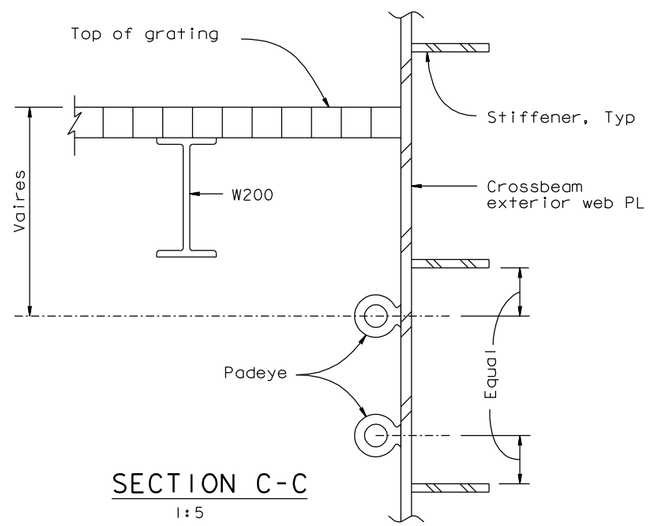

SECTION C-C
1:5

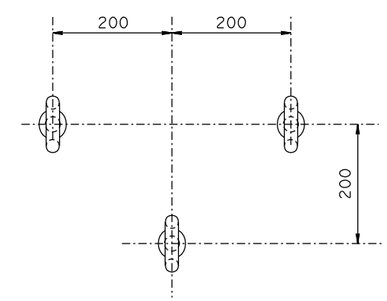

DETAIL A (3 Padeye unit)
1:5

NOTES:

1. For service platform details, see "Road Plans".
2. Crossbeams with service platform are PP14, 32, 50, 80 and 110. Platforms are attached to west face.
3. For rail details, see "Crossbeam Access Details No.4" sheet.
4. For padeye details, see "Girder Access Details No.10" sheet. △3
5. Crossbeam Cable Railing Alternate Plan may be used, see "Crossbeam Access Detail No.3A" sheet. △2

100% PS&E

CONTRACT CHANGE ORDER NO. ____
SHEET ___ OF ___

REQUESTS FOR INFORMATION NOT ADDRESSED IN THIS CCO REMAIN IN FORCE

MARK	DATE	DESCRIPTIONS	BY	CH'D	CCO#
3	11/08/11	CABLE RAILING	DT	MN	188
2	03/25/11	W2-OBG SAFETY CABLE	DT	MN	188
1	06/22/11	WELDED PADEYES	NV	MN	41

REVISIONS

R. Valizadeh/V.Toan/Y.L./W.L./F.C.
DESIGN OVERSIGHT
SIGN OFF DATE 11/08/11

	BY	CHECKED
DESIGN	M. Nader	N. Vo
DETAILS	G. Baker	N. Vo
QUANTITIES	G. Baker	N. Vo

PREPARED FOR THE STATE OF CALIFORNIA DEPARTMENT OF TRANSPORTATION

R. Manzanarez
PROJECT ENGINEER

ALL DIMENSIONS ARE IN MILLIMETERS UNLESS OTHERWISE SHOWN

BRIDGE NO. 34-0006L/R
KILOMETER POST 13.2/13.9

SAN FRANCISCO OAKLAND BAY BRIDGE
EAST SPAN SEISMIC SAFETY PROJECT
SELF-ANCHORED SUSPENSION BRIDGE
(SUPERSTRUCTURE & TOWER)

CROSSBEAM ACCESS DETAILS NO. 3

Rev. Date: 5-18-98

ORIGINAL SCALE IN MILLIMETERS FOR REDUCED PLANS 0 10 20 30 40 50 60 70 80 90 100

CU 04
EA 0120F1

DISREGARD PRINTS BEARING EARLIER REVISION DATES

REVISION DATES (PRELIMINARY STAGE ONLY) 04/08/02 01/01/02 12/19/02

SHEET 538R3 OF

FILE => I:\bb\04-012001\sas\contract plans and cco\cco\cco#188\3-revision 11-08-11\dgn\akcad03.dgn

USERNAME => arivera DATE PLOTTED => 08 NOV 2011 TIME PLOTTED => 08:24:08

DIST.	COUNTY	ROUTE	KILOMETER POST TOTAL PROJECT	SHEET NO.	TOTAL SHEETS
04	SF	80	13.2/13.9	955S1R2	1204

REGISTERED ENGINEER - CIVIL

03-25-11

PLANS APPROVAL DATE

REGISTERED PROFESSIONAL ENGINEER James P. Duxbury No. C 64677 Exp. 06/30/13 CIVIL STATE OF CALIFORNIA

The State of California or its officers or agents shall not be responsible for the accuracy or completeness of electronic copies of this plan sheet.

T.Y. LIN / MOFFATT & NICHOL
825 BATTERY STREET
SAN FRANCISCO, CA 94111

Caltrans now has a web site! To get to the web site, go to: http://www.dot.ca.gov

Caltrans Metric

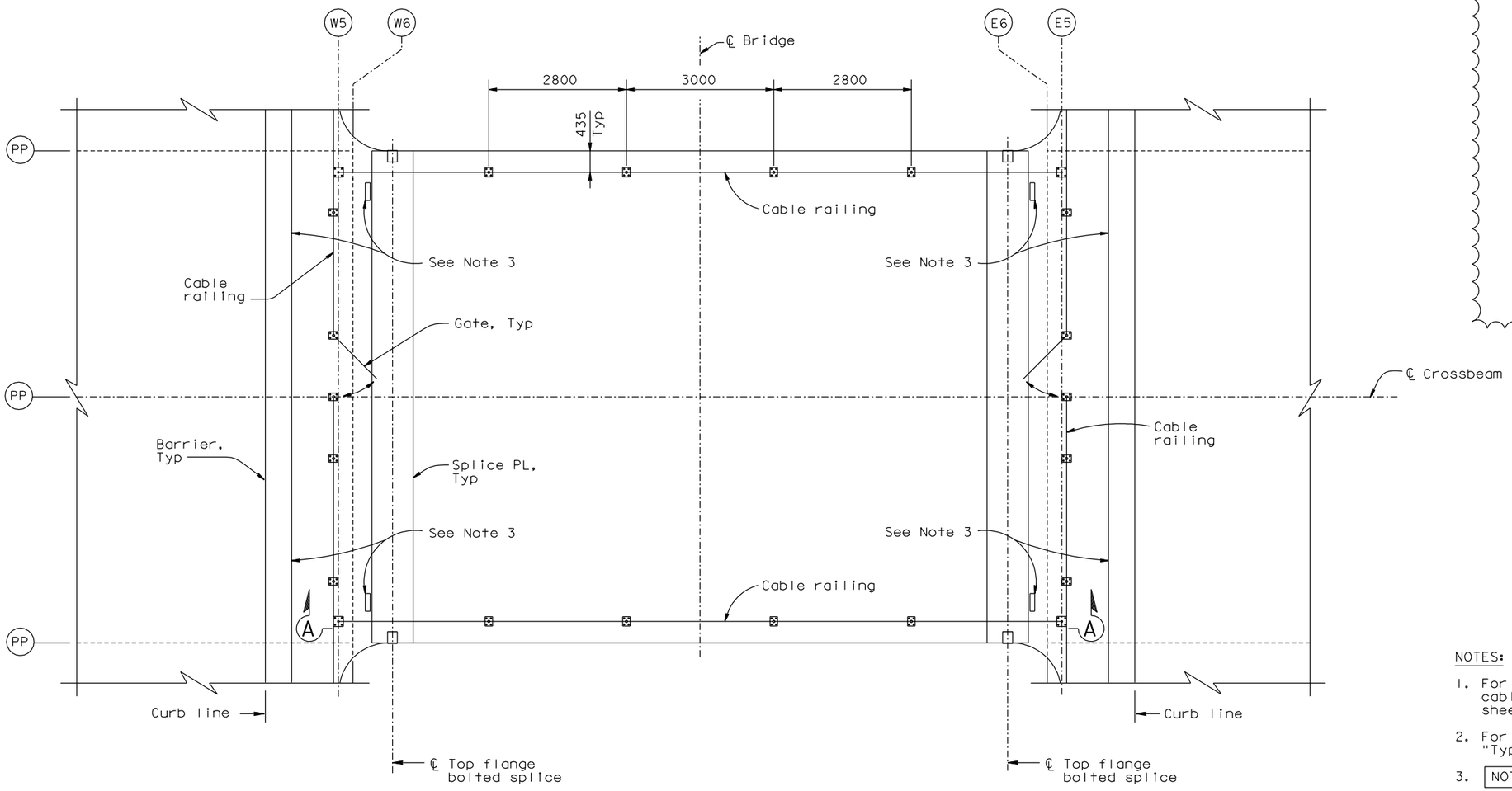

CROSSBEAM CABLE RAILING ALTERNATE PLAN

1:50

NOTES:

1. For details of railing posts, struts, cables and cable hardware, see "Typical Girder Details No. 17A" sheet.
2. For cable railing base plate details, see "Typical Girder Details No. 12A" sheet.
3. NOT FOR TIE-OFF

   The cable railing shall not be used as a tie-off rail. Post this information on a stainless steel plaque (200x300 minimum) on back side of the barrier at the locations shown. Plaques shall be mounted to the barrier using 6 mm (1/4") Dia stainless cap screws. Plaque and mounting details shall be submitted for Engineer's review and approval.
4. For Section A-A, see "Crossbeam Access Details No. 3E" sheet.

CONTRACT CHANGE ORDER NO. ____
SHEET ____ OF ____

REQUESTS FOR INFORMATION NOT ADDRESSED IN THIS CCO REMAIN IN FORCE

MARK	DATE	DESCRIPTIONS	BY	CH'D	CCO#
2	11/08/11	CABLE RAILING	DT	JD	188
1	04/22/11	W2-OBG SAFETY CABLE	CC	JD	188
0	03/25/11	W2-OBG SAFETY CABLE	CC	JD	188

REVISIONS

R. Valizadeh/V. Toan/Y.L./W.L./F.C.
DESIGN OVERSIGHT
SIGN OFF DATE 11/08/11

Rev. Date: 5-18-98

DESIGN	BY C. Choi	CHECKED J. Duxbury	
DETAILS	BY L. Motal	CHECKED D. Turner	
QUANTITIES	BY L. Motal	CHECKED D. Turner	

PREPARED FOR THE STATE OF CALIFORNIA DEPARTMENT OF TRANSPORTATION

ALL DIMENSIONS ARE IN MILLIMETERS UNLESS OTHERWISE SHOWN

R. Manzanarez
PROJECT ENGINEER

BRIDGE NO. 34-0006L/R
KILOMETER POST 13.2/13.9

SAN FRANCISCO OAKLAND BAY BRIDGE
EAST SPAN SEISMIC SAFETY PROJECT
SELF-ANCHORED SUSPENSION BRIDGE
(SUPERSTRUCTURE & TOWER)

CROSSBEAM ACCESS DETAILS NO. 3A

ORIGINAL SCALE IN MILLIMETERS FOR REDUCED PLANS 0 10 20 30 40 50 60 70 80 90 100

CU 04
EA 0120F1

DISREGARD PRINTS BEARING EARLIER REVISION DATES 03/25/11

REVISION DATES (PRELIMINARY STAGE ONLY)

SHEET 538S1R2 OF

FILE => L:\BB\04-012001\SAS\Contract Plans and CCO\CCO\CCO#188\3-Revision 11-08-11\DGN\akcad03a.dgn

100% PS&E

USERNAME => srivera DATE PLOTTED => 08 NOV 2011 TIME PLOTTED => 16:09:48

DIST.	COUNTY	ROUTE	KILOMETER POST TOTAL PROJECT	SHEET NO.	TOTAL SHEETS
04	SF	80	13.2/13.9	955S2R2	1204

REGISTERED ENGINEER - CIVIL

03-25-11

PLANS APPROVAL DATE

REGISTERED PROFESSIONAL ENGINEER
James P. Duxbury
No. C 64677
Exp. 06/30/13
CIVIL
STATE OF CALIFORNIA

The State of California or its officers or agents shall not be responsible for the accuracy or completeness of electronic copies of this plan sheet.

T.Y. LIN / MOFFATT & NICHOL
825 BATTERY STREET
SAN FRANCISCO, CA 94111

Caltrans now has a web site! To get to the web site, go to: http://www.dot.ca.gov

△2 This Sheet Intentionally Left Blank.

CONTRACT CHANGE ORDER NO. ____
SHEET ____ OF ____

REQUESTS FOR INFORMATION NOT ADDRESSED IN THIS CCO REMAIN IN FORCE

MARK	DATE	DESCRIPTIONS	BY	CH'D	CCO#
△2	11/08/11	CABLE RAILING	DT	JD	188
△1	04/22/11	W2-OBG SAFETY CABLE	CC	JD	188
△0	03/25/11	W2-OBG SAFETY CABLE	CC	JD	188

REVISIONS

R. Valizadeh/V. Toan/Y.L./W.L./F.C.
DESIGN OVERSIGHT
SIGN OFF DATE 11/08/11

	BY	CHECKED
DESIGN	C. Choi	J. Duxbury
DETAILS	L. Motal	C. Choi
QUANTITIES	L. Motal	C. Choi

PREPARED FOR THE STATE OF CALIFORNIA DEPARTMENT OF TRANSPORTATION

ALL DIMENSIONS ARE IN MILLIMETERS UNLESS OTHERWISE SHOWN

R. Manzanarez
PROJECT ENGINEER

BRIDGE NO. 34-0006L/R
KILOMETER POST 13.2/13.9

SAN FRANCISCO OAKLAND BAY BRIDGE
EAST SPAN SEISMIC SAFETY PROJECT
SELF-ANCHORED SUSPENSION BRIDGE
(SUPERSTRUCTURE & TOWER)

CROSSBEAM ACCESS DETAILS NO. 3B

Rev. Date: 5-18-98

ORIGINAL SCALE IN MILLIMETERS FOR REDUCED PLANS 0 10 20 30 40 50 60 70 80 90 100

CU 04
EA 0120F1

DISREGARD PRINTS BEARING EARLIER REVISION DATES

REVISION DATES (PRELIMINARY STAGE ONLY) 03/25/11

SHEET 53852R2 OF

FILE => I:\bb\04-01200I\sas\contract plans and cco\cco\cco#188\3-revision 11-08-11\dgn\akcad03b.dgn

100 % PS&E

USERNAME => grivera DATE PLOTTED => 08 NOV 2011 TIME PLOTTED => 08:39:46

DIST.	COUNTY	ROUTE	KILOMETER POST TOTAL PROJECT	SHEET NO.	TOTAL SHEETS
04	SF	80	13.2/13.9	955S3R1	1204

Caltrans Metric

REGISTERED ENGINEER - CIVIL

04-22-11

PLANS APPROVAL DATE

REGISTERED PROFESSIONAL ENGINEER
James P.Duxbury
No. C 64677
Exp. 06/30/13
CIVIL
STATE OF CALIFORNIA

The State of California or its officers or agents shall not be responsible for the accuracy or completeness of electronic copies of this plan sheet.

T.Y. LIN / MOFFATT & NICHOL
825 BATTERY STREET
SAN FRANCISCO, CA 94111

Caltrans now has a web site! To get to the web site, go to: http://www.dot.ca.gov

This Sheet Intentionally Left Blank.

100 % PS&E

CONTRACT CHANGE ORDER NO. _____
SHEET ____ OF ____

REQUESTS FOR INFORMATION NOT ADDRESSED IN THIS CCO REMAIN IN FORCE

ALL DIMENSIONS ARE IN MILLIMETERS UNLESS OTHERWISE SHOWN

R. Valizadeh/V. Toan/Y.L./W.L./F.C.
DESIGN OVERSIGHT
Roger Valizadeh / Vong Toan / Y. Lin
SIGN OFF DATE 11/08/11

MARK	DATE	DESCRIPTIONS	BY	CH'D	CCO#
1	11/08/11	CABLE RAILING	DT	JD	188
0	04/22/11	W2-OBG SAFETY CABLE	CC	JD	188

REVISIONS

	BY	CHECKED
DESIGN	C. Choi	J. Duxbury
DETAILS	L. Motal	D. Turner
QUANTITIES	L. Motal	D. Turner

PREPARED FOR THE STATE OF CALIFORNIA DEPARTMENT OF TRANSPORTATION

R. Manzanarez
PROJECT ENGINEER

BRIDGE NO. 34-0006L/R
KILOMETER POST 13.2/13.9

SAN FRANCISCO OAKLAND BAY BRIDGE
EAST SPAN SEISMIC SAFETY PROJECT
SELF-ANCHORED SUSPENSION BRIDGE
(SUPERSTRUCTURE & TOWER)

CROSSBEAM ACCESS DETAILS NO. 3C

Rev. Date: 5-18-98

ORIGINAL SCALE IN MILLIMETERS FOR REDUCED PLANS 0 10 20 30 40 50 60 70 80 90 100

CU 04
EA 0120F1

DISREGARD PRINTS BEARING EARLIER REVISION DATES

REVISION DATES (PRELIMINARY STAGE ONLY) 04/22/11

SHEET 538S3R1 OF

FILE => I:\bb\04-012001\sas\contract plans and cco\cco\cco#188\3-revision 11-08-11\dgn\akcad03c.dgn

USERNAME => arivera DATE PLOTTED => 08 NOV 2011 TIME PLOTTED => 08:41:09

DIST.	COUNTY	ROUTE	KILOMETER POST TOTAL PROJECT	SHEET NO.	TOTAL SHEETS
04	SF	80	13.2/13.9	955S4R1	1204

Caltrans Metric

REGISTERED ENGINEER - CIVIL

04-22-11

PLANS APPROVAL DATE

REGISTERED PROFESSIONAL ENGINEER
James P.Duxbury
No. C 64677
Exp. 06/30/13
CIVIL
STATE OF CALIFORNIA

The State of California or its officers or agents shall not be responsible for the accuracy or completeness of electronic copies of this plan sheet.

T.Y. LIN / MOFFATT & NICHOL
825 BATTERY STREET
SAN FRANCISCO, CA 94111

Caltrans now has a web site! To get to the web site, go to: http://www.dot.ca.gov

This Sheet Intentionally Left Blank.

100 % PS&E

USERNAME => arivera DATE PLOTTED => 08 NOV 2011 TIME PLOTTED => 08:26:43

CONTRACT CHANGE ORDER NO. _____
SHEET ____ OF ____

REQUESTS FOR INFORMATION NOT ADDRESSED IN THIS CCO REMAIN IN FORCE

ALL DIMENSIONS ARE IN MILLIMETERS UNLESS OTHERWISE SHOWN

R. Valizadeh/V. Toan/Y.L./W.L./F.C.
DESIGN OVERSIGHT
Roger Valizadeh / Vong Toan / Y. Lin
SIGN OFF DATE 11/08/11

MARK	DATE	DESCRIPTIONS	BY	CH'D	CCO#
1	11/08/11	CABLE RAILING	DT	JD	188
0	04/22/11	W2-OBG SAFETY CABLE	CC	JD	188

REVISIONS

	BY	CHECKED
DESIGN	C. Choi	J. Duxbury
DETAILS	L. Motal	C. Choi
QUANTITIES	L. Motal	C. Choi

PREPARED FOR THE STATE OF CALIFORNIA DEPARTMENT OF TRANSPORTATION

R. Manzanarez
PROJECT ENGINEER

BRIDGE NO. 34-0006L/R
KILOMETER POST 13.2/13.9

SAN FRANCISCO OAKLAND BAY BRIDGE
EAST SPAN SEISMIC SAFETY PROJECT
SELF-ANCHORED SUSPENSION BRIDGE
(SUPERSTRUCTURE & TOWER)

CROSSBEAM ACCESS DETAILS NO. 3D

Rev. Date: 5-18-98

ORIGINAL SCALE IN MILLIMETERS FOR REDUCED PLANS 0 10 20 30 40 50 60 70 80 90 100

CU 04
EA 0120F1

DISREGARD PRINTS BEARING EARLIER REVISION DATES

REVISION DATES (PRELIMINARY STAGE ONLY) 04/22/11

SHEET 538S4R1 OF

FILE => I:\bb\04-012001\sas\contract plans and cco\cco\cco#188\3-revision 11-08-11\dgn\akcad03d.dgn

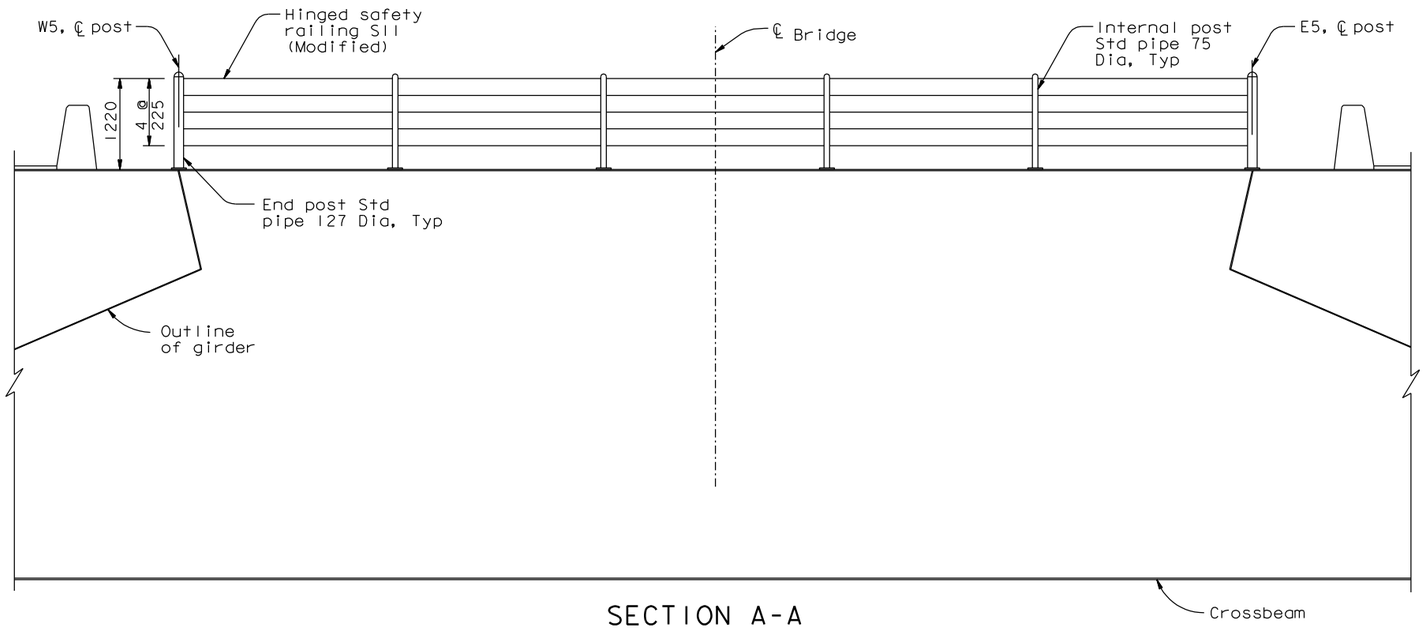

SECTION A-A

1:40

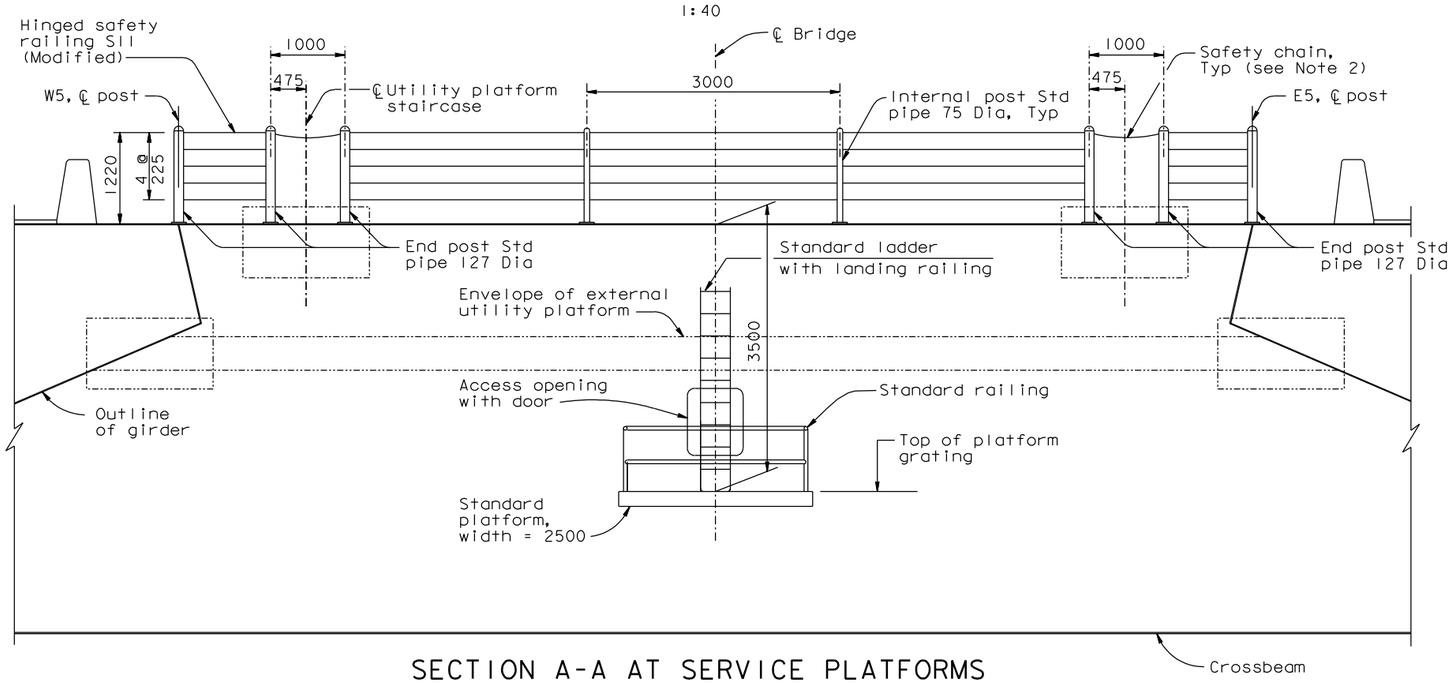

SECTION A-A AT SERVICE PLATFORMS

1:40

NOTES:

1. For cable railing elevations on crossbeam from PP 14 to PP 28, see "Crossbeam Access Details No. 3F" sheet.

CONTRACT CHANGE ORDER NO. _____
SHEET ____ OF ____

REQUESTS FOR INFORMATION NOT ADDRESSED IN THIS CCO REMAIN IN FORCE

ALL DIMENSIONS ARE IN MILLIMETERS UNLESS OTHERWISE SHOWN

DIST.	COUNTY	ROUTE	KILOMETER POST TOTAL PROJECT	SHEET NO.	TOTAL SHEETS
04	SF	80	13.2/13.9	955S5	1204

REGISTERED ENGINEER - CIVIL

11-08-11
PLANS APPROVAL DATE

REGISTERED PROFESSIONAL ENGINEER Tien Hung Ho No. C 43990 Exp. 06/30/13 CIVIL STATE OF CALIFORNIA

The State of California or its officers or agents shall not be responsible for the accuracy or completeness of electronic copies of this plan sheet.

T.Y. LIN / MOFFATT & NICHOL
825 BATTERY STREET
SAN FRANCISCO, CA 94111

Caltrans now has a web site! To get to the web site, go to: http://www.dot.ca.gov

R. Valizadeh/V. Toan/Y.L./W.L./F.C.
DESIGN OVERSIGHT
SIGN OFF DATE 11/08/11

MARK	DATE	DESCRIPTIONS	BY	CH'D	CCO#
0	11/08/11	CABLE RAILING	GB	TH	188

REVISIONS

	BY	CHECKED
DESIGN	G. Baker	T. Ho
DETAILS	G. Baker	T. Ho
QUANTITIES	G. Baker	T. Ho

PREPARED FOR THE STATE OF CALIFORNIA DEPARTMENT OF TRANSPORTATION

R. Manzanarez
PROJECT ENGINEER

BRIDGE NO. 34-0006L/R
KILOMETER POST 13.2/13.9

SAN FRANCISCO OAKLAND BAY BRIDGE
EAST SPAN SEISMIC SAFETY PROJECT
SELF-ANCHORED SUSPENSION BRIDGE
(SUPERSTRUCTURE & TOWER)

CROSSBEAM ACCESS DETAILS NO. 3E

Rev. Date: 5-18-98

ORIGINAL SCALE IN MILLIMETERS FOR REDUCED PLANS 0 10 20 30 40 50 60 70 80 90 100

CU 04
EA 0120F1

DISREGARD PRINTS BEARING EARLIER REVISION DATES

REVISION DATES (PRELIMINARY STAGE ONLY) 11/08/11

SHEET 538S5 OF

100 % PS&E

USERNAME => yrivera DATE PLOTTED => 08 NOV 2011 TIME PLOTTED => 16:23:33

FILE => L:\BB\04-012001\SAS\Contract Plans and CCO\CCO\CCO#188\3-Revision 11-08-11\DGN\akcad03e.dgn

DIST.	COUNTY	ROUTE	KILOMETER POST TOTAL PROJECT	SHEET NO.	TOTAL SHEETS
04	SF	80	13.2/13.9	955S6	1204

REGISTERED ENGINEER - CIVIL

11-08-11

PLANS APPROVAL DATE

REGISTERED PROFESSIONAL ENGINEER Tien Hung Ho No. C 43990 Exp. 06/30/13 CIVIL STATE OF CALIFORNIA

The State of California or its officers or agents shall not be responsible for the accuracy or completeness of electronic copies of this plan sheet.

T.Y. LIN / MOFFATT & NICHOL
825 BATTERY STREET
SAN FRANCISCO, CA 94111

Caltrans now has a web site! To get to the web site, go to: http://www.dot.ca.gov

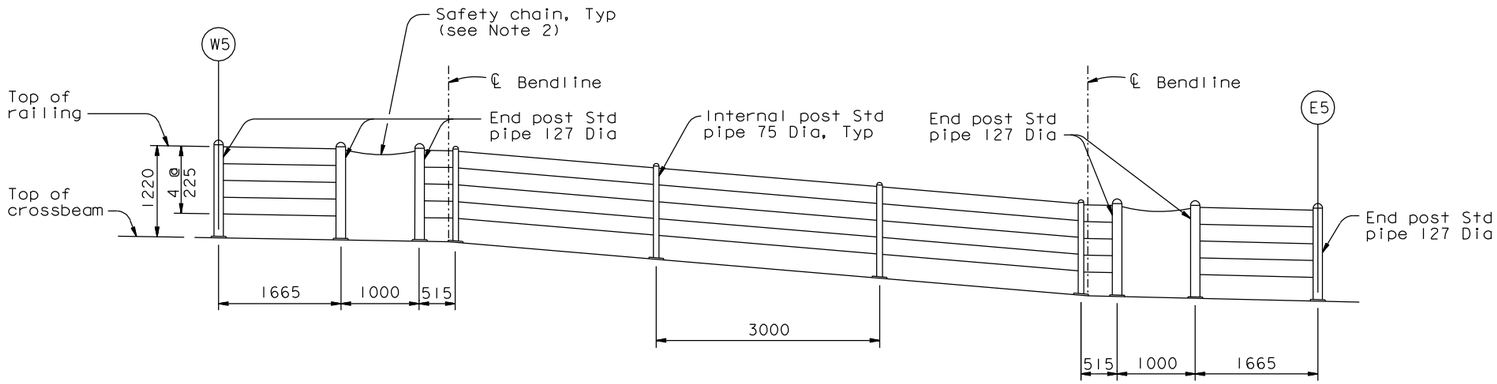

CABLE RAILING ELEVATION AT CROSSBEAM PP 14

1:40

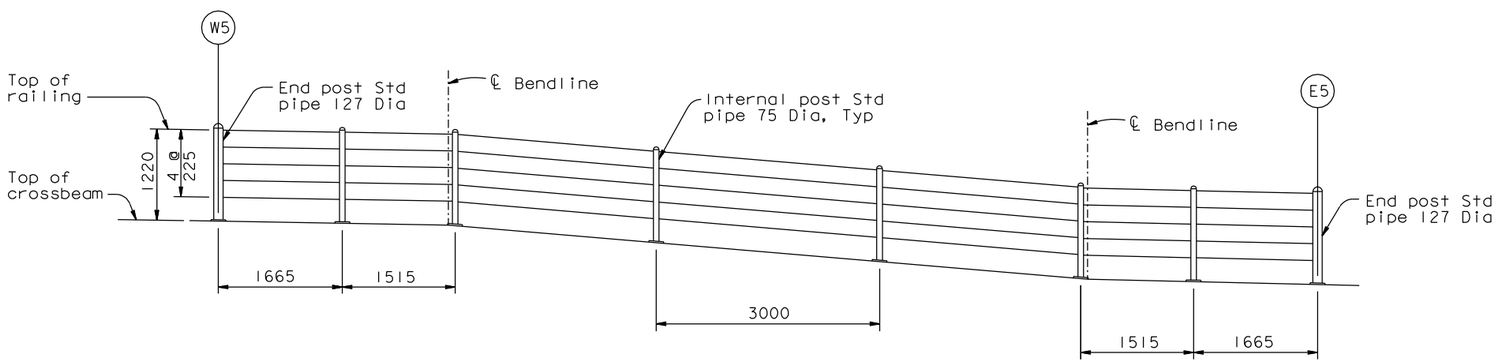

CABLE RAILING ELEVATION AT CROSSBEAM PP 16

(PP 20, PP 22, PP 26 & PP 28 Similar)

1:40

NOTES:

1. For cable railing details, see "Typical Girder Details No. 17A" sheet.
2. Safety chain shall be galvanized chain with spring clip end fasteners. Chain and fasteners to be rated at 5 kN (1000 lb) breaking load.

CONTRACT CHANGE ORDER NO. _____
SHEET ____ OF ____

REQUESTS FOR INFORMATION NOT ADDRESSED IN THIS CCO REMAIN IN FORCE

ALL DIMENSIONS ARE IN MILLIMETERS UNLESS OTHERWISE SHOWN

R. Valizadeh/V. Toan/Y.L./W.L./F.C.
DESIGN OVERSIGHT
SIGN OFF DATE 11/08/11

MARK	DATE	DESCRIPTIONS	BY	CH'D	CCO#
0	11/08/11	CABLE RAILING	GB	TH	188

REVISIONS

	BY		CHECKED
DESIGN	G. Baker		T. Ho
DETAILS	G. Baker		T. Ho
QUANTITIES	G. Baker		T. Ho

PREPARED FOR THE STATE OF CALIFORNIA DEPARTMENT OF TRANSPORTATION

R. Manzanarez
PROJECT ENGINEER

BRIDGE NO. 34-0006L/R
KILOMETER POST 13.2/13.9

SAN FRANCISCO OAKLAND BAY BRIDGE
EAST SPAN SEISMIC SAFETY PROJECT
SELF-ANCHORED SUSPENSION BRIDGE
(SUPERSTRUCTURE & TOWER)

CROSSBEAM ACCESS DETAILS NO. 3F

Rev. Date: 5-18-98

ORIGINAL SCALE IN MILLIMETERS FOR REDUCED PLANS 0 10 20 30 40 50 60 70 80 90 100

CU 04
EA 0120F1

DISREGARD PRINTS BEARING EARLIER REVISION DATES 11/08/11

REVISION DATES (PRELIMINARY STAGE ONLY)

SHEET 538S6 OF

FILE => I:\bb\04-012001\sas\contract plans and cco\cco\cco#188\3-revision 11-08-11\dgn\akcad03f.dgn

100 % PS&E

USERNAME => arivera DATE PLOTTED => 08 NOV 2011 TIME PLOTTED => 16:30:06