DIST.	COUNTY	ROUTE	KILOMETER POST TOTAL PROJECT	SHEET NO.	TOTAL SHEETS
04	SF	80	13.2/13.9	955R3	1204

REGISTERED ENGINEER - CIVIL

12-6-04

PLANS APPROVAL DATE

REGISTERED PROFESSIONAL ENGINEER Marwan N.Nader No. C 54426 Exp. 12/31/11 CIVIL STATE OF CALIFORNIA

The State of California or its officers or agents shall not be responsible for the accuracy or completeness of electronic copies of this plan sheet.

T.Y. LIN / MOFFATT & NICHOL
825 BATTERY STREET
SAN FRANCISCO, CA 94111

Caltrans now has a web site! To get to the web site, go to: http://www.dot.ca.gov

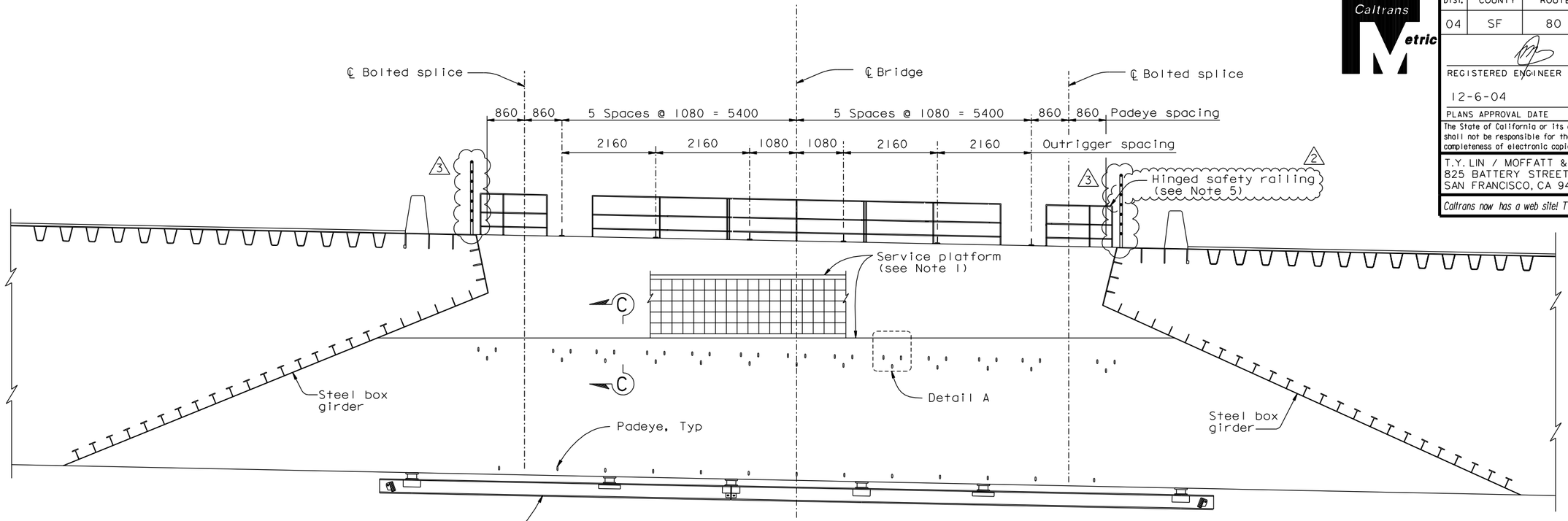

ELEVATION (Crossbeam with Service Platform)
1:50

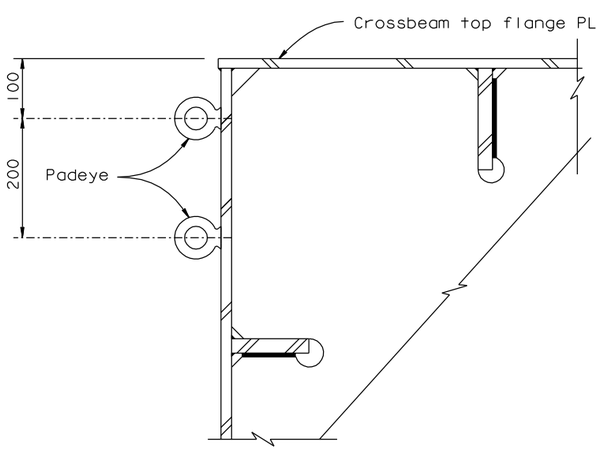

SECTION B-B
1:5

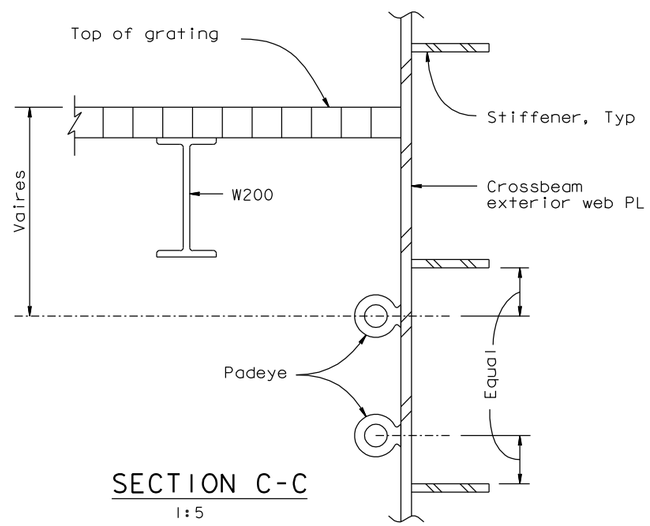

SECTION C-C
1:5

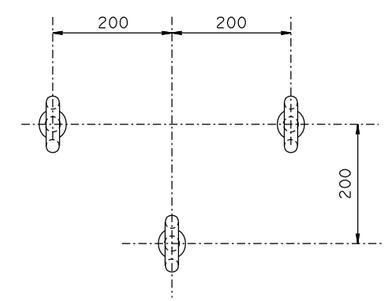

DETAIL A (3 Padeye unit)
1:5

NOTES:

1. For service platform details, see "Road Plans".
2. Crossbeams with service platform are PP14, 32, 50, 80 and 110. Platforms are attached to west face.
3. For rail details, see "Crossbeam Access Details No.4" sheet.
4. For padeye details, see "Girder Access Details No.10" sheet. △3
5. Crossbeam Cable Railing Alternate Plan may be used, see "Crossbeam Access Detail No.3A" sheet. △2

100% PS&E

CONTRACT CHANGE ORDER NO. ____
SHEET ___ OF ___

REQUESTS FOR INFORMATION NOT ADDRESSED IN THIS CCO REMAIN IN FORCE

MARK	DATE	DESCRIPTIONS	BY	CH'D	CCO#
3	11/08/11	CABLE RAILING	DT	MN	188
2	03/25/11	W2-OBG SAFETY CABLE	DT	MN	188
1	06/22/11	WELDED PADEYES	NV	MN	41

REVISIONS

R. Valizadeh/V.Toan/Y.L./W.L./F.C.
DESIGN OVERSIGHT
SIGN OFF DATE 11/08/11

	BY	CHECKED
DESIGN	M. Nader	N. Vo
DETAILS	G. Baker	N. Vo
QUANTITIES	G. Baker	N. Vo

PREPARED FOR THE STATE OF CALIFORNIA DEPARTMENT OF TRANSPORTATION

R. Manzanarez
PROJECT ENGINEER

ALL DIMENSIONS ARE IN MILLIMETERS UNLESS OTHERWISE SHOWN

BRIDGE NO. 34-0006L/R
KILOMETER POST 13.2/13.9

SAN FRANCISCO OAKLAND BAY BRIDGE
EAST SPAN SEISMIC SAFETY PROJECT
SELF-ANCHORED SUSPENSION BRIDGE
(SUPERSTRUCTURE & TOWER)

CROSSBEAM ACCESS DETAILS NO. 3

Rev. Date: 5-18-98

ORIGINAL SCALE IN MILLIMETERS FOR REDUCED PLANS 0 10 20 30 40 50 60 70 80 90 100

CU 04
EA 0120F1

DISREGARD PRINTS BEARING EARLIER REVISION DATES

REVISION DATES (PRELIMINARY STAGE ONLY) 04/08/02 01/01/02 12/19/02

SHEET 538R3 OF

FILE => I:\bb\04-012001\sas\contract plans and cco\cco\cco#188\3-revision 11-08-11\dgn\akcad03.dgn

USERNAME => arivera DATE PLOTTED => 08 NOV 2011 TIME PLOTTED => 08:24:08