DIST.	COUNTY	ROUTE	KILOMETER POST TOTAL PROJECT	SHEET NO.	TOTAL SHEETS
04	SF	80	13.2/13.9	636S1	1204

Caltrans Metric

Daniel J. Turner
REGISTERED ENGINEER - CIVIL

11-08-11
PLANS APPROVAL DATE

REGISTERED PROFESSIONAL ENGINEER Daniel J. Turner No. C 65033 Exp. 06/30/13 CIVIL STATE OF CALIFORNIA

The State of California or its officers or agents shall not be responsible for the accuracy or completeness of electronic copies of this plan sheet.

T.Y. LIN / MOFFATT & NICHOL
825 BATTERY STREET
SAN FRANCISCO, CA 94111

Caltrans now has a web site! To get to the web site, go to: http://www.dot.ca.gov

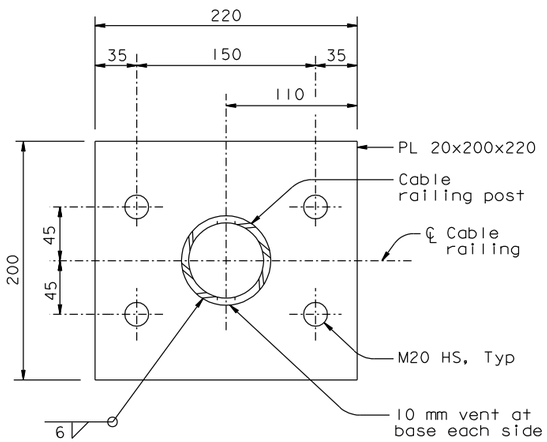

AT INTERNAL POSTS

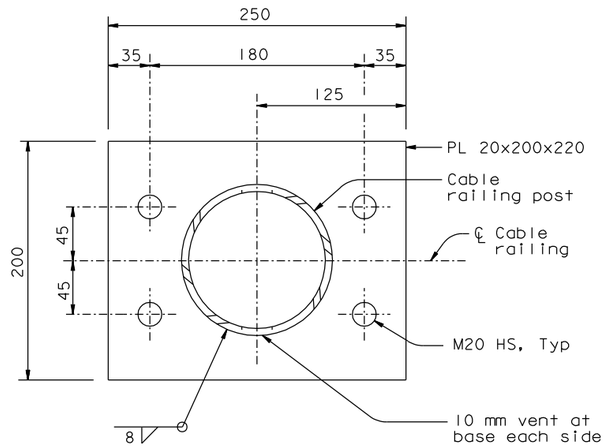

AT W2 / E2 & CROSSBEAM END POSTS

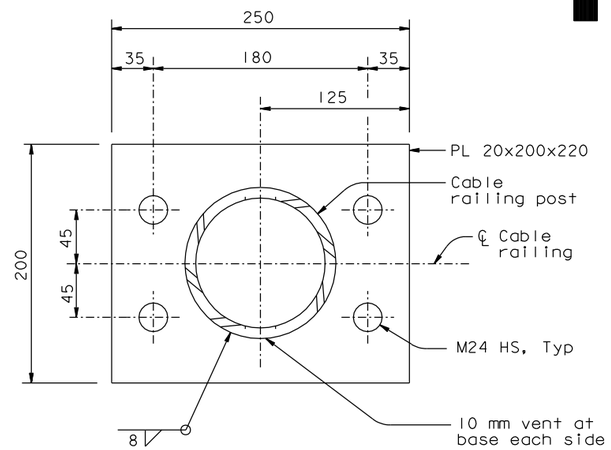

AT W5 / E5 END POSTS

DETAIL E (See Note 1)

1:2.5

NOTES:

1. At the Contractor's option, an 8 mm fillet weld around the perimeter of the base plate may be used in lieu of 4 bolts.
2. Abandoned bolt holes in the deck plate and crossbeam top flange plate shall be caulked.

100% PS&E

CONTRACT CHANGE ORDER NO. ____
SHEET ____ OF ____

REQUESTS FOR INFORMATION NOT ADDRESSED IN THIS CCO REMAIN IN FORCE

ALL DIMENSIONS ARE IN MILLIMETERS UNLESS OTHERWISE SHOWN

R. Valizadeh/V. Toan/Y.L./W.L./F.C.
DESIGN OVERSIGHT
SIGN OFF DATE 11/08/11

MARK	DATE	DESCRIPTIONS	BY	CH'D	CCO#
0	11/08/11	CABLE RAILING	DT	GB	188

REVISIONS

	BY	CHECKED
DESIGN	D. Turner	G. Baker
DETAILS	D. Turner	G. Baker
QUANTITIES	D. Turner	G. Baker

PREPARED FOR THE STATE OF CALIFORNIA DEPARTMENT OF TRANSPORTATION

R. Manzanarez
PROJECT ENGINEER

BRIDGE NO. 34-0006L/R
KILOMETER POST 13.2/13.9

SAN FRANCISCO OAKLAND BAY BRIDGE
EAST SPAN SEISMIC SAFETY PROJECT
SELF-ANCHORED SUSPENSION BRIDGE
(SUPERSTRUCTURE & TOWER)

TYPICAL GIRDER DETAILS NO. 12A

Rev. Date: 5-18-98

ORIGINAL SCALE IN MILLIMETERS FOR REDUCED PLANS 0 10 20 30 40 50 60 70 80 90 100

CU 04
EA 0120F1

DISREGARD PRINTS BEARING EARLIER REVISION DATES → 11/08/11

REVISION DATES (PRELIMINARY STAGE ONLY)

SHEET 219S1 OF

FILE => I:\bb\04-012001\sas\contract plans and cco\cco\cco#188\3-revision 11-08-11\dgn\agdkd06c.dgn

USERNAME => arivera DATE PLOTTED => 08 NOV 2011 TIME PLOTTED => 10:06:07