DIST.	COUNTY	ROUTE	KILOMETER POST TOTAL PROJECT	SHEET NO.	TOTAL SHEETS
04	SF	80	13.2/13.9	955S1	1204

REGISTERED ENGINEER - CIVIL

03-25-11

PLANS APPROVAL DATE

REGISTERED PROFESSIONAL ENGINEER James P. Duxbury No. C 64677 Exp. 06/30/11 CIVIL STATE OF CALIFORNIA

The State of California or its officers or agents shall not be responsible for the accuracy or completeness of electronic copies of this plan sheet.

T.Y. LIN / MOFFATT & NICHOL
825 BATTERY STREET
SAN FRANCISCO, CA 94111

Caltrans now has a web site! To get to the web site, go to: http://www.dot.ca.gov

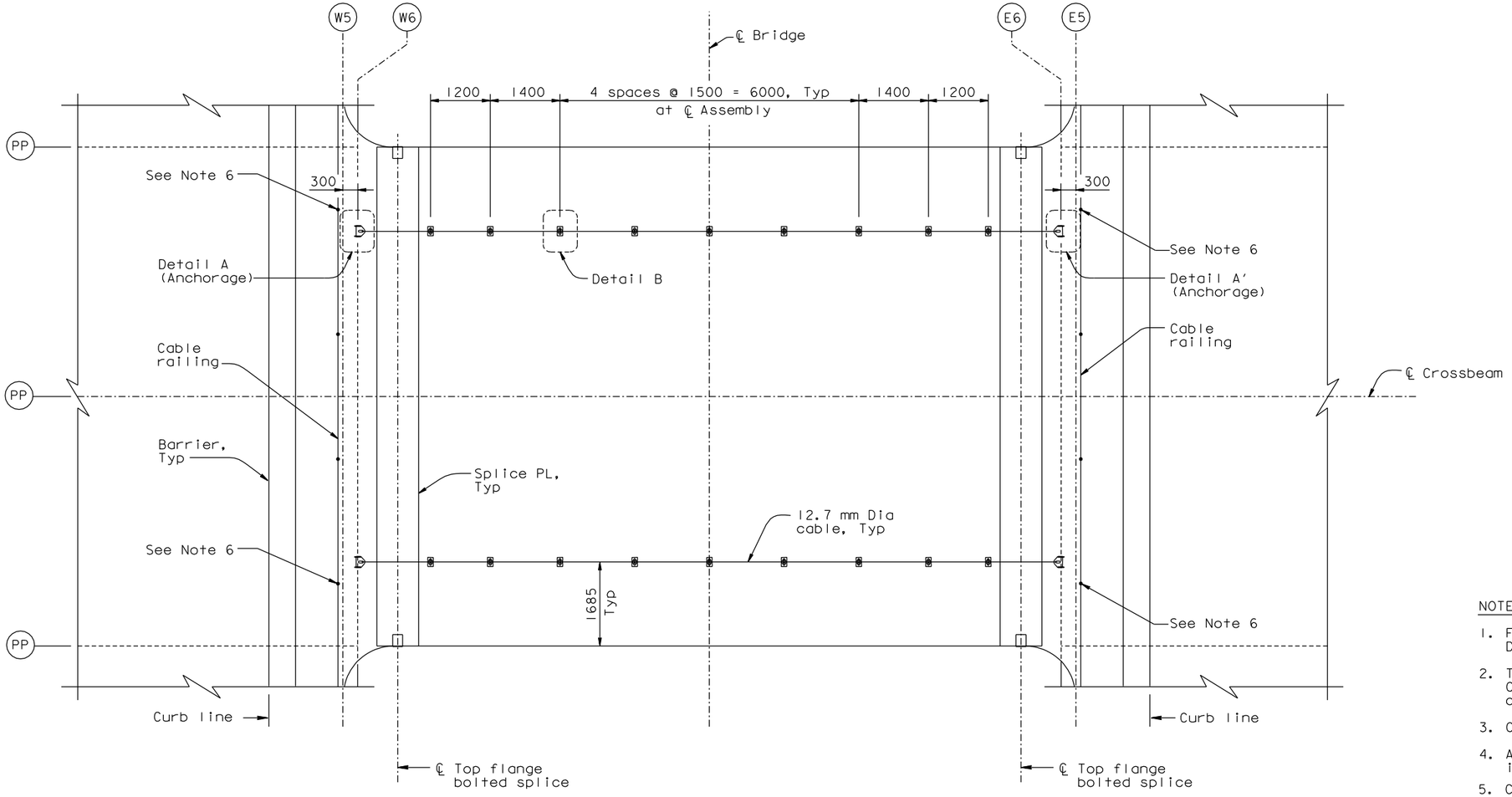

CROSSBEAM SAFETY CABLE
ALTERNATE PLAN

1:50

NOTES:

1. For Details A, A' and B, see "Crossbeam Access Details No. 7" sheet.
2. The cable shall be RRL preformed wire rope, 6x19 Class, IWRC, XIP, with minimum breaking strength of 118.3 kN.
3. Cable shall not be spliced between terminations.
4. All cable and hardware shall be galvanized and installed per manufacturer's recommendations.
5. Cable shall be installed with a deflection between 100 to 150 mm, measured from taut position, when pulled with an upward force of 0.13 kN at midpoint between any two padeyes.
6. No more than two (2) persons allowed on a single safety cable at any given time

   Post this information on a stainless steel plaque (200x300 minimum) on the cable railing posts at the locations shown (4 total). Plaque and mounting details shall be submitted for Engineer's review and approval.
7. For all cable segments, Contractor shall determine installation length by survey.

100% PS&E

CONTRACT CHANGE ORDER NO. _____
SHEET ____ OF ____

REQUESTS FOR INFORMATION NOT ADDRESSED IN THIS CCO REMAIN IN FORCE

ALL DIMENSIONS ARE IN MILLIMETERS UNLESS OTHERWISE SHOWN

R. Valizadeh/V. Toan/Y.L./W.L./F.C.
DESIGN OVERSIGHT
SIGN OFF DATE 03/25/11

MARK	DATE	DESCRIPTIONS	BY	CH'D	CCO#
0	03/25/11	W2-OBG SAFETY CABLE	CC	JD	188

REVISIONS

DESIGN	BY	C. Choi	CHECKED	J. Duxbury
DETAILS	BY	L. Motal	CHECKED	D. Turner
QUANTITIES	BY	L. Motal	CHECKED	D. Turner

PREPARED FOR THE STATE OF CALIFORNIA DEPARTMENT OF TRANSPORTATION

R. Manzanarez
PROJECT ENGINEER

BRIDGE NO. 34-0006L/R
KILOMETER POST 13.2/13.9

SAN FRANCISCO OAKLAND BAY BRIDGE
EAST SPAN SEISMIC SAFETY PROJECT
SELF-ANCHORED SUSPENSION BRIDGE
(SUPERSTRUCTURE & TOWER)

CROSSBEAM ACCESS DETAILS NO. 3A

Rev. Date: 5-18-98

ORIGINAL SCALE IN MILLIMETERS FOR REDUCED PLANS 0 10 20 30 40 50 60 70 80 90 100

CU 04
EA 0120F1

DISREGARD PRINTS BEARING EARLIER REVISION DATES → 03/25/11

REVISION DATES (PRELIMINARY STAGE ONLY)

SHEET 538S1 OF

FILE => I:\bb\04-012001\sas\contract plans and cco\cco\cco#188\1-original 03-25-11\dgn\akcad03a.dgn

USERNAME => DWinrow DATE PLOTTED => 25 MAR 2011 TIME PLOTTED => 12:23:33