DIST.	COUNTY	ROUTE	KILOMETER POST TOTAL PROJECT	SHEET NO.	TOTAL SHEETS
04	SF	80	13.2/13.9	909S2	1204

REGISTERED ENGINEER - CIVIL

03-25-11

PLANS APPROVAL DATE

REGISTERED PROFESSIONAL ENGINEER James P. Duxbury No. C 64677 Exp. 06/30/11 CIVIL STATE OF CALIFORNIA

The State of California or its officers or agents shall not be responsible for the accuracy or completeness of electronic copies of this plan sheet.

T.Y. LIN / MOFFATT & NICHOL
825 BATTERY STREET
SAN FRANCISCO, CA 94111

Caltrans now has a web site! To get to the web site, go to: http://www.dot.ca.gov

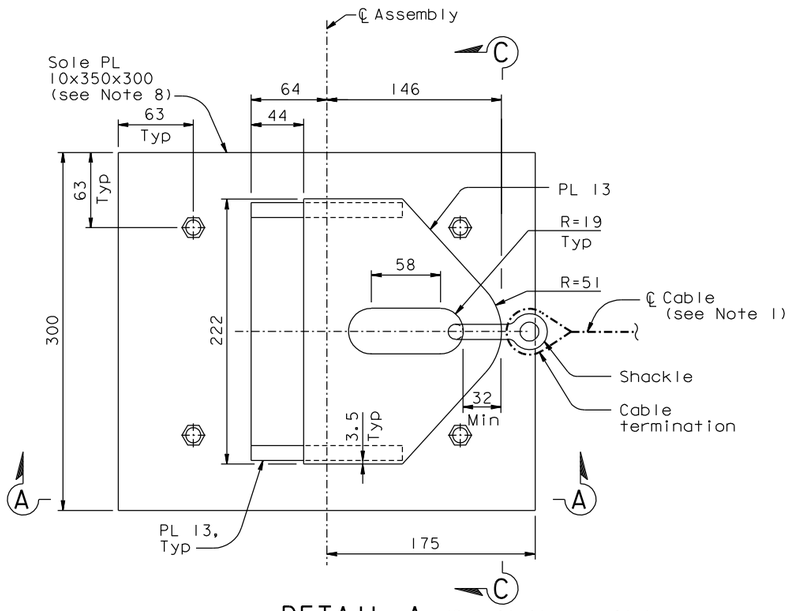

DETAIL A (Detail A' opposite)
1:2.5

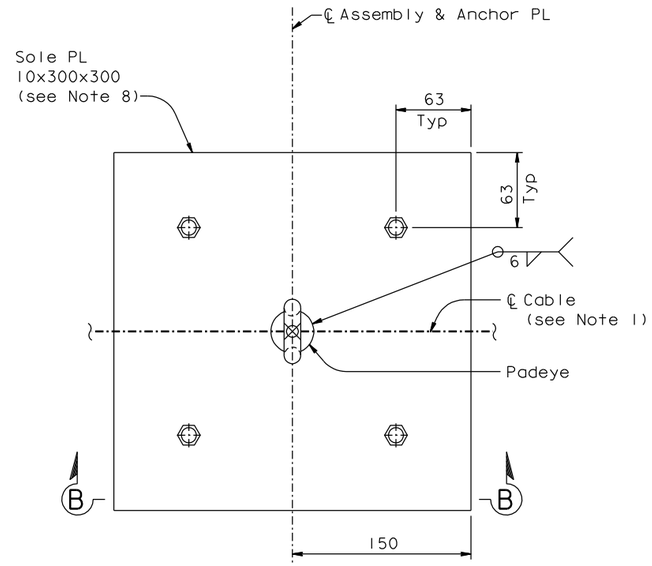

DETAIL B (Intermediate Padeye)
1:2.5

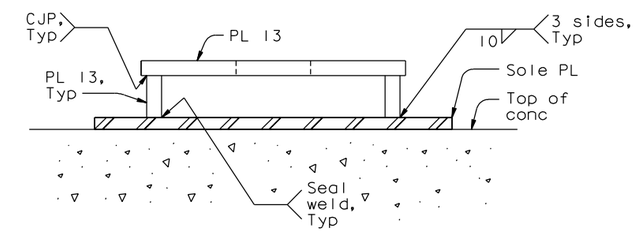

SECTION C-C (Shackle and Cable not shown for clarity)
1:2.5

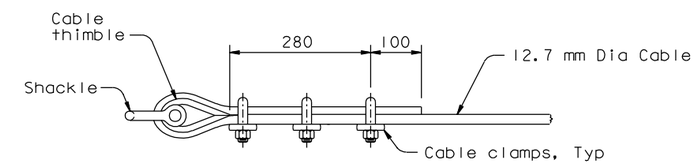

CABLE TERMINATION DETAIL
NTS

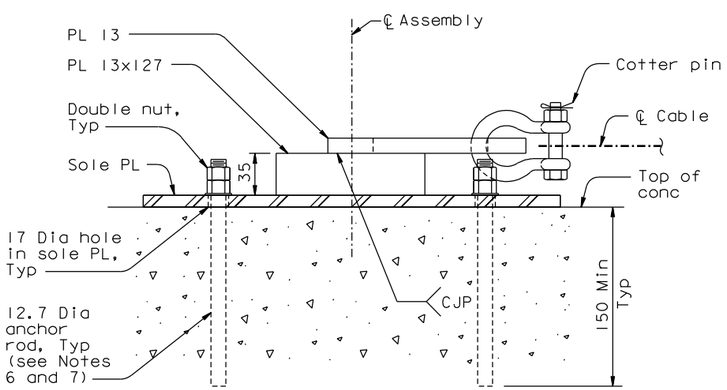

SECTION A-A
1:2.5

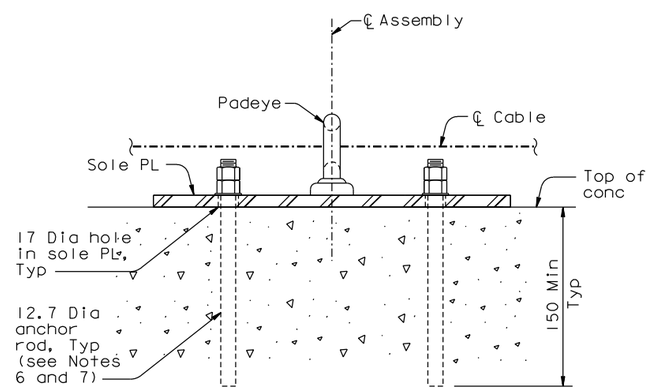

SECTION B-B
1:2.5

NOTES:

1. For layout of cable, see "Pier W2 Access Details No. 2" sheet.
2. Provide thimbles at all cable loops per manufacturer's recommendations.
3. Padeye shall be Crosby size No. 5 or equivalent.
4. Sole plates and anchor plates shall have a minimum yield strength of Fy=50 ksi (345 MPa) and shall be A572 or equivalent.
5. Shackle shall be 0.5 in (12.7 mm) Crosby bolt type anchor shackle or equivalent, with a working load limit of at least 2 metric tons (19.6kN). Shackle shall be galvanized.
6. Anchoring system shall be Hilti HIT-RE 500-SD Epoxy Adhesive Anchoring system with Hilti HAS-R 316 SS all threaded rod (Fu > 690 MPa), or equivalent.
7. Anchor rods and epoxy shall be installed per manufacturer's recommendations.
8. Assemblies, including underside of sole PL, shall be galvanized and painted.

CONTRACT CHANGE ORDER NO. _____
SHEET ____ OF ____

REQUESTS FOR INFORMATION NOT ADDRESSED IN THIS CCO REMAIN IN FORCE

ALL DIMENSIONS ARE IN MILLIMETERS UNLESS OTHERWISE SHOWN

R. Valizadeh/V. Toan/Y.L./W.L./F.C.
DESIGN OVERSIGHT
Roya Valizadeh / Vong Toan / Y. Liu
SIGN OFF DATE 03/25/11

MARK	DATE	DESCRIPTIONS	BY	CH'D	CCO#
0	03/25/11	W2-OBG SAFETY CABLE	CC	JD	188

REVISIONS

DESIGN	BY C. Choi	CHECKED J. Duxbury	
DETAILS	BY L. Motal	CHECKED C. Choi	
QUANTITIES	BY L. Motal	CHECKED C. Choi	

PREPARED FOR THE STATE OF CALIFORNIA DEPARTMENT OF TRANSPORTATION

R. Manzanarez
PROJECT ENGINEER

BRIDGE NO. 34-0006L/R
KILOMETER POST 13.2/13.9

SAN FRANCISCO OAKLAND BAY BRIDGE
EAST SPAN SEISMIC SAFETY PROJECT
SELF-ANCHORED SUSPENSION BRIDGE
(SUPERSTRUCTURE & TOWER)

PIER W2 ACCESS DETAILS NO. 3

Rev. Date: 5-18-98

ORIGINAL SCALE IN MILLIMETERS FOR REDUCED PLANS 0 10 20 30 40 50 60 70 80 90 100

CU 04
EA 0120F1

DISREGARD PRINTS BEARING EARLIER REVISION DATES 03/25/11

REVISION DATES (PRELIMINARY STAGE ONLY)

SHEET 492S2 OF

FILE => I:\bb\04-012001\sas\contract plans and cco\cco\cco#188\1-original 03-25-11\dgn\akacc01b.dgn

100% PS&E

USERNAME => DWinrow DATE PLOTTED => 25 MAR 2011 TIME PLOTTED => 12:15:51