DIST.	COUNTY	ROUTE	KILOMETER POST TOTAL PROJECT	SHEET NO.	TOTAL SHEETS
04	SF	80	13.2/13.9	955S6	1204

REGISTERED ENGINEER - CIVIL

05-11-12

PLANS APPROVAL DATE

REGISTERED PROFESSIONAL ENGINEER Tien Hung Ho No. C 43990 Exp. 06/30/13 CIVIL STATE OF CALIFORNIA

The State of California or its officers or agents shall not be responsible for the accuracy or completeness of electronic copies of this plan sheet.

T.Y. LIN / MOFFATT & NICHOL
825 BATTERY STREET
SAN FRANCISCO, CA 94111

Caltrans now has a web site! To get to the web site, go to: http://www.dot.ca.gov

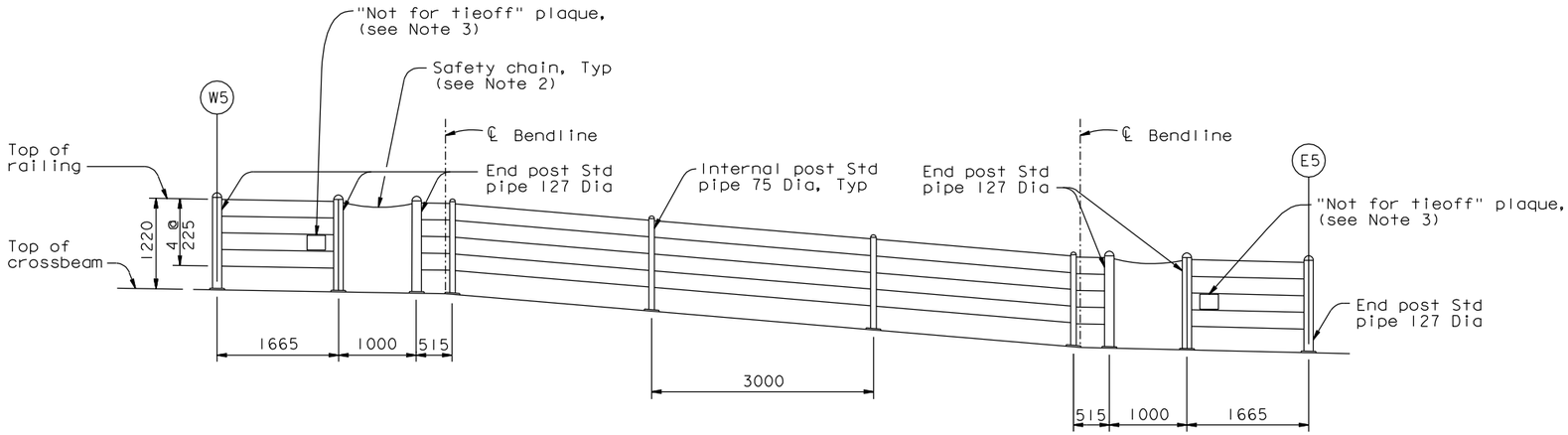

CABLE RAILING ELEVATION AT CROSSBEAM PP 14

1:40

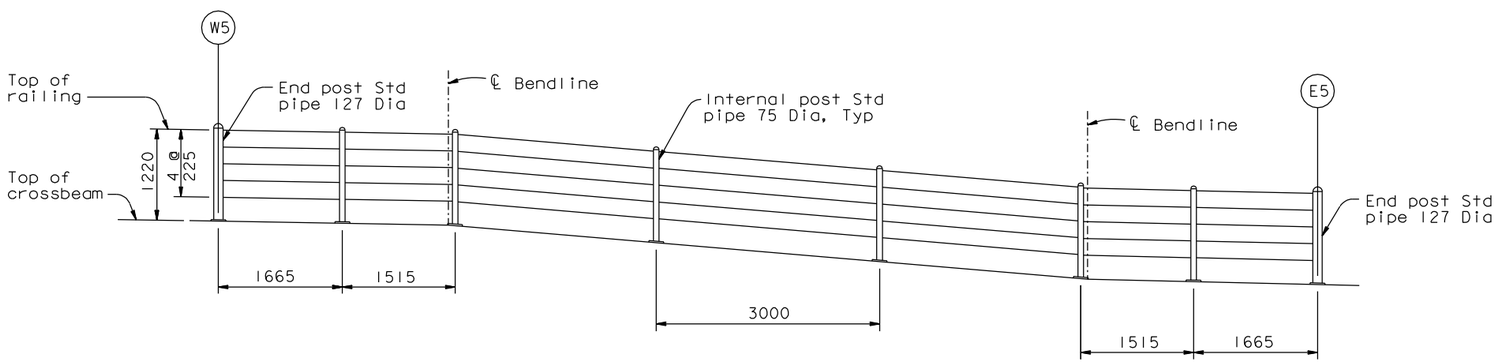

CABLE RAILING ELEVATION AT CROSSBEAM PP 16

(PP 20, PP 22, PP 26 & PP 28 Similar)

1:40

NOTES:

1. For cable railing details, see "Typical Girder Details No. 17A" sheet.
2. Safety chain shall be galvanized chain with spring clip end fasteners. Chain and fasteners to be rated at 5 kN (1000 lb) breaking load.
3. For plaque details, see "Typical Girder Details No. 17E" sheet.
4. Posts to be vertical in the transverse direction and normal to the deck in the longitudinal direction of the bridge.

CONTRACT CHANGE ORDER NO. _____
SHEET ____ OF ____

REQUESTS FOR INFORMATION NOT ADDRESSED IN THIS CCO REMAIN IN FORCE

ALL DIMENSIONS ARE IN MILLIMETERS UNLESS OTHERWISE SHOWN

R. Valizadeh/V. Toan/Y.L./W.L./F.C.
DESIGN OVERSIGHT
SIGN OFF DATE 05/11/12

MARK	DATE	DESCRIPTIONS	BY	CH'D	CCO#
0	05/11/12	CABLE RAILING	DT	TH	188

REVISIONS

	BY		CHECKED
DESIGN	D. Turner		T. Ho
DETAILS	D. Turner		H. Tazir
QUANTITIES	D. Turner		H. Tazir

PREPARED FOR THE STATE OF CALIFORNIA DEPARTMENT OF TRANSPORTATION

R. Manzanarez
PROJECT ENGINEER

BRIDGE NO. 34-0006L/R
KILOMETER POST 13.2/13.9

SAN FRANCISCO OAKLAND BAY BRIDGE
EAST SPAN SEISMIC SAFETY PROJECT
SELF-ANCHORED SUSPENSION BRIDGE
(SUPERSTRUCTURE & TOWER)

CROSSBEAM ACCESS DETAILS NO. 3F

Rev. Date: 5-18-98

ORIGINAL SCALE IN MILLIMETERS FOR REDUCED PLANS 0 10 20 30 40 50 60 70 80 90 100

CU 04
EA 0120F1

DISREGARD PRINTS BEARING EARLIER REVISION DATES 05/11/12

REVISION DATES (PRELIMINARY STAGE ONLY)

SHEET 538S6 OF

FILE => I:\bb\04-012001\sas\contract plans and cco\cco\cco#188\6-update 05-11-12\dgn\akcad03f.dgn

100% PS&E

USERNAME => DWinrow DATE PLOTTED => 11 MAY 2012 TIME PLOTTED => 13:21:40