| DIST. | COUNTY | ROUTE | KILOMETER POST TOTAL PROJECT | SHEET NO. | TOTAL SHEETS |
|---|---|---|---|---|---|
| 04 | SF | 80 | 13.2/13.9 | 955SIR2 | 1204 |

REGISTERED ENGINEER - CIVIL

03-25-11

PLANS APPROVAL DATE

REGISTERED PROFESSIONAL ENGINEER James P. Duxbury No. C 64677 Exp. 06/30/13 CIVIL STATE OF CALIFORNIA

*The State of California or its officers or agents shall not be responsible for the accuracy or completeness of electronic copies of this plan sheet.*

T.Y. LIN / MOFFATT & NICHOL
825 BATTERY STREET
SAN FRANCISCO, CA 94111

*Caltrans now has a web site! To get to the web site, go to: http://www.dot.ca.gov*

Caltrans Metric

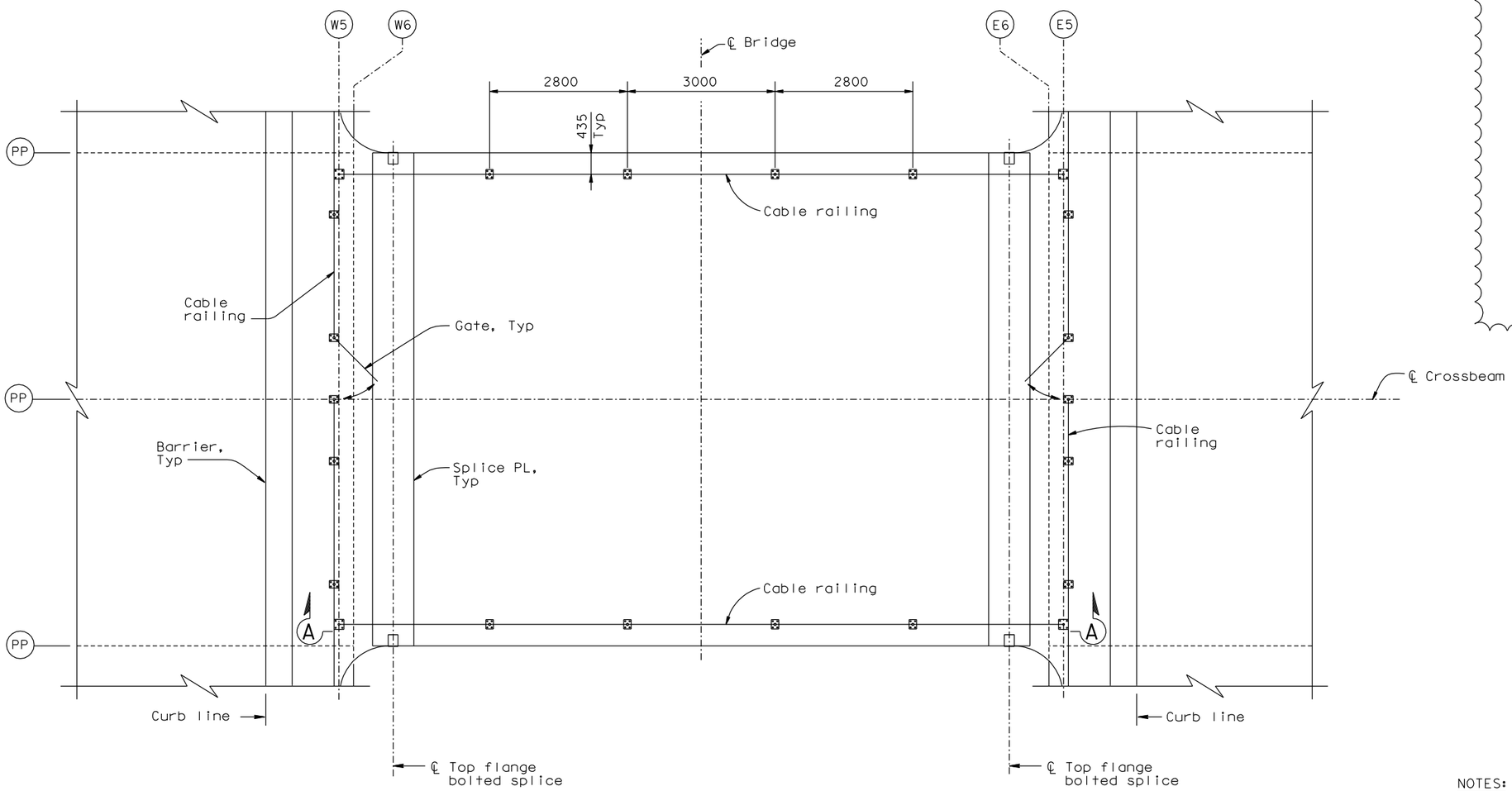


## CROSSBEAM CABLE RAILING ALTERNATE PLAN

1:50

NOTES:

1. For details of railing posts, struts, cables and cable hardware, see "Typical Girder Details No.17A" sheet.
2. For cable railing base plate details, see "Typical Girder Details No.12A" sheet.
3. For Section A-A, see "Crossbeam Access Details No.3E" sheet.

CONTRACT CHANGE ORDER NO. ____
SHEET ___ OF ___

*REQUESTS FOR INFORMATION NOT ADDRESSED IN THIS CCO REMAIN IN FORCE*

| MARK | DATE | DESCRIPTIONS | BY | CH'D | CCO# |
|---|---|---|---|---|---|
| 2 | 05/11/12 | CABLE RAILING | DT | JD | 188 |
| 1 | 04/22/11 | W2-OBG SAFETY CABLE | CC | JD | 188 |
| 0 | 03/25/11 | W2-OBG SAFETY CABLE | CC | JD | 188 |

REVISIONS

R. Valizadeh/V. Toan/Y.L./W.L./F.C.
DESIGN OVERSIGHT
SIGN OFF DATE 05/11/12

| | BY | CHECKED |
|---|---|---|
| DESIGN | C. Choi | J. Duxbury |
| DETAILS | L. Motal | D. Turner |
| QUANTITIES | L. Motal | D. Turner |

PREPARED FOR THE STATE OF CALIFORNIA DEPARTMENT OF TRANSPORTATION

R. Manzanarez
PROJECT ENGINEER

ALL DIMENSIONS ARE IN MILLIMETERS UNLESS OTHERWISE SHOWN

BRIDGE NO. 34-0006L/R
KILOMETER POST 13.2/13.9

SAN FRANCISCO OAKLAND BAY BRIDGE
EAST SPAN SEISMIC SAFETY PROJECT
SELF-ANCHORED SUSPENSION BRIDGE
(SUPERSTRUCTURE & TOWER)

# CROSSBEAM ACCESS DETAILS NO. 3A

Rev. Date: 5-18-98

ORIGINAL SCALE IN MILLIMETERS FOR REDUCED PLANS 0 10 20 30 40 50 60 70 80 90 100

CU 04
EA 0120F1

DISREGARD PRINTS BEARING EARLIER REVISION DATES 03/25/11

REVISION DATES (PRELIMINARY STAGE ONLY)

SHEET 538SIR2 OF

FILE => I:\bb\04-012001\sas\contract plans and cco\cco\cco#188\6-update 05-11-12\dgn\akcad03a.dgn

100% PS&E

USERNAME => DWinrow DATE PLOTTED => 11 MAY 2012 TIME PLOTTED => 13:18:50