DIST.	COUNTY	ROUTE	KILOMETER POST TOTAL PROJECT	SHEET NO.	TOTAL SHEETS
04	SF	80	13.2/13.9	805R2	1204

Caltrans Metric

George Baker
REGISTERED ENGINEER - CIVIL
12-6-04
PLANS APPROVAL DATE

REGISTERED PROFESSIONAL ENGINEER George S. Baker No. C 57112 Exp. 12/31/05 CIVIL STATE OF CALIFORNIA

The State of California or its officers or agents shall not be responsible for the accuracy or completeness of electronic copies of this plan sheet.

T.Y. LIN / MOFFATT & NICHOL
825 BATTERY STREET
SAN FRANCISCO, CA 94111

Caltrans now has a web site! To get to the web site, go to: http://www.dot.ca.gov

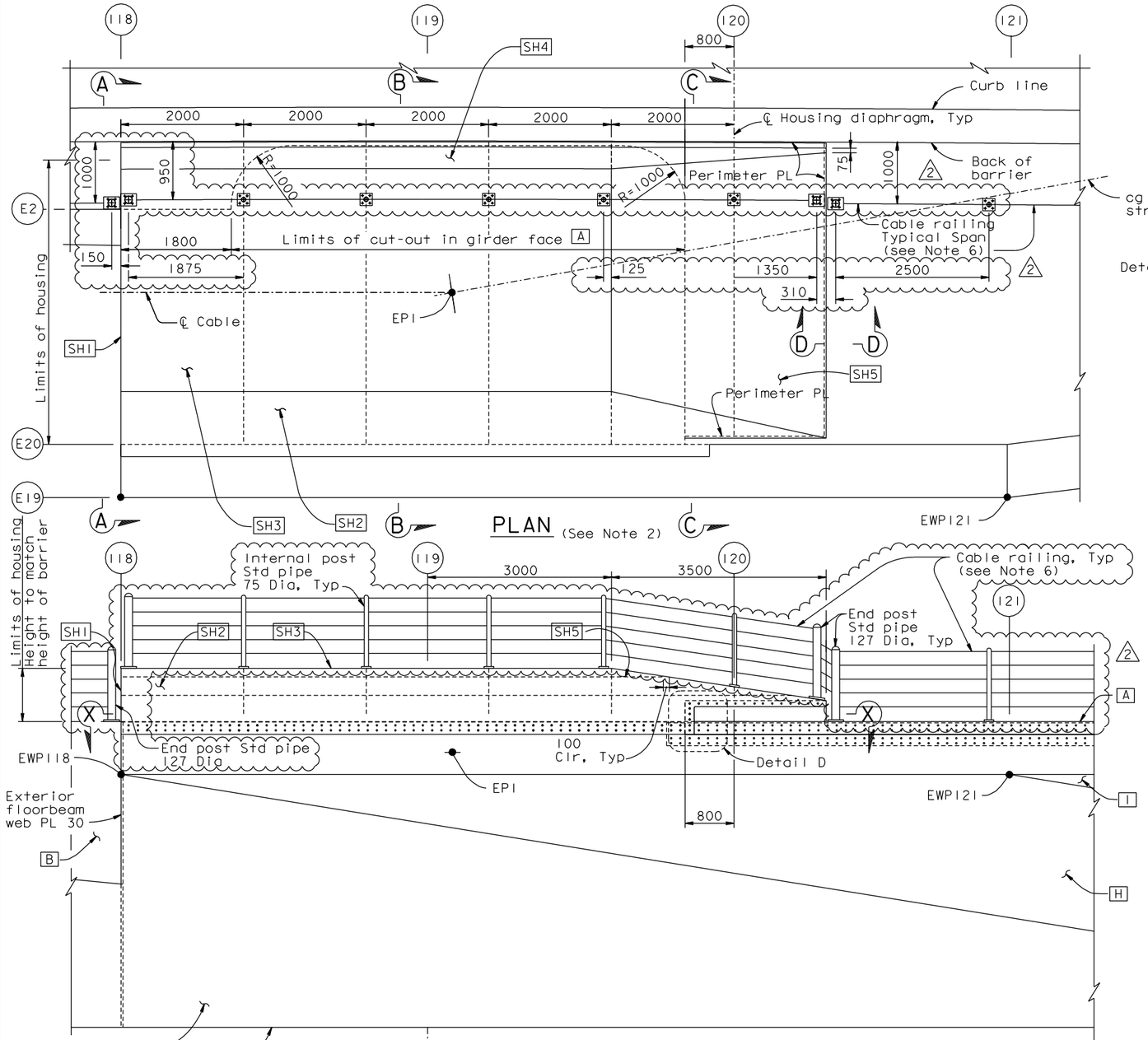

ELEVATION
EAST SADDLE HOUSING
1:40

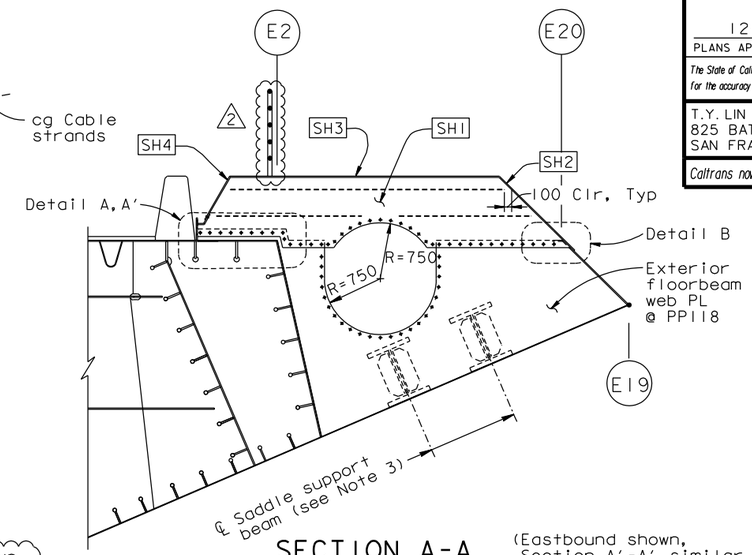

SECTION A-A
1:40
(Eastbound shown, Section A'-A' similar and opposite hand)

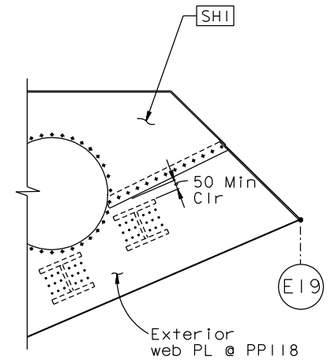

ALTERNATIVE SECTION A-A (See Note 7)
1:40

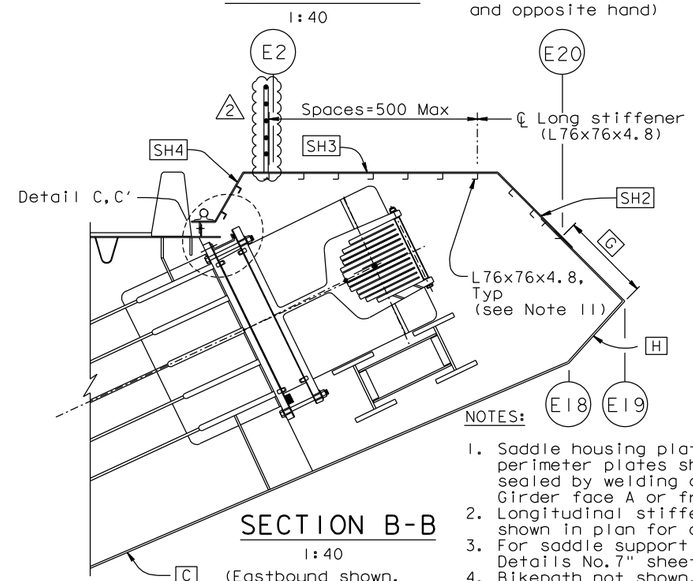

SECTION B-B
1:40
(Eastbound shown, Section B'-B' similar and opposite hand)

LEGEND:

SH5 Saddle Housing Plate 5

C Girder face C

NOTES:

1. Saddle housing plates SH1 through SH5 and all perimeter plates shall be 10 mm thick and shall be sealed by welding against any entry of water from Girder face A or from above.
2. Longitudinal stiffeners in saddle housing are not shown in plan for clarity.
3. For saddle support beam details, see "East Saddle Details No.7" sheet.
4. Bikepath not shown. For bikepath details, see "Bikepath Details" sheets.
5. For Sections C-C, D-D and Details A, B and C, see "East Saddle Housing Details No.2" sheet.
6. For cable railing details, see "Typical Girder Details No.17A" sheet. (△2)
7. At the Contractor's option, it is acceptable to use "Alternative Section A-A" in lieu of Section A-A".
8. For Detail D and Section X-X, see "East Saddle Housing Details No. 1A" sheet.
9. For architectural splice details, see "Girder At East Transition Details No.3" sheet.
10. For Details A' and C', see "East Saddle Housing Details No.2" sheet.
11. At the Contractor's option, ASTM A572 Gr. 345 or ASTM A529 Gr. 345 may be substituted for ASTM A709 Gr. 345 for the L76x76x4.8 angles, subject to review and approval of the Engineer.

ALL DIMENSIONS ARE IN MILLIMETERS UNLESS OTHERWISE SHOWN

Daniel J. Turner
REGISTERED PROFESSIONAL ENGINEER Daniel J. Turner No. C 65033 Exp. 06/30/13 CIVIL STATE OF CALIFORNIA

FOR REVISIONS ONLY

CONTRACT CHANGE ORDER NO. ____
SHEET ___ OF ___

REQUESTS FOR INFORMATION NOT ADDRESSED IN THIS CCO REMAIN IN FORCE

R. Valizadeh/V. Toan/Y.L./W.L./F.C.
DESIGN OVERSIGHT
Roya Valizadeh / Vonal Toan / Y. Liu
SIGN OFF DATE 11/08/11

MARK	DATE	DESCRIPTIONS	BY	CH'D	CCO#
2	11/08/11	CABLE RAILING	DT	MN	188
1	09/01/11	EAST END OBG	GB	MN	87

REVISIONS

DESIGN	BY G. Baker	CHECKED	T. McMeans
DETAILS	BY C. Mauch	CHECKED	T. McMeans
QUANTITIES	BY C. Mauch	CHECKED	D. Harrison

PREPARED FOR THE STATE OF CALIFORNIA DEPARTMENT OF TRANSPORTATION

R. Manzanarez
PROJECT ENGINEER

BRIDGE NO. 34-0006L/R
KILOMETER POST 13.2/13.9

SAN FRANCISCO OAKLAND BAY BRIDGE
EAST SPAN SEISMIC SAFETY PROJECT
SELF-ANCHORED SUSPENSION BRIDGE
(SUPERSTRUCTURE & TOWER)

EAST SADDLE HOUSING DETAILS NO. 1

Rev. Date: 5-18-98

ORIGINAL SCALE IN MILLIMETERS FOR REDUCED PLANS 0 10 20 30 40 50 60 70 80 90 100

CU 04
EA 0120F1

DISREGARD PRINTS BEARING EARLIER REVISION DATES

REVISION DATES (PRELIMINARY STAGE ONLY) 5/15/99 08/02/99 05/31/01 04/08/02 07/01/02 12/19/02

SHEET 388R2 OF

FILE => I:\bb\04-012001\sas\contract plans and cco\cco\cco#188\3-revision 11-08-11\dgn\agshd05.dgn

USERNAME => arivera DATE PLOTTED => 08 NOV 2011 TIME PLOTTED => 08:19:10

100 % PS&E