DIST.	COUNTY	ROUTE	KILOMETER POST TOTAL PROJECT	SHEET NO.	TOTAL SHEETS
04	SF	80	13.2/13.9	820R3	1204

Caltrans Metric

REGISTERED ENGINEER - CIVIL

12-6-04
PLANS APPROVAL DATE

REGISTERED PROFESSIONAL ENGINEER Tien Hung Ho No. C 43990 Exp. 6/30/11 CIVIL STATE OF CALIFORNIA

The State of California or its officers or agents shall not be responsible for the accuracy or completeness of electronic copies of this plan sheet.

T.Y. LIN / MOFFATT & NICHOL
825 BATTERY STREET
SAN FRANCISCO, CA 94111

Caltrans now has a web site! To get to the web site, go to: http://www.dot.ca.gov

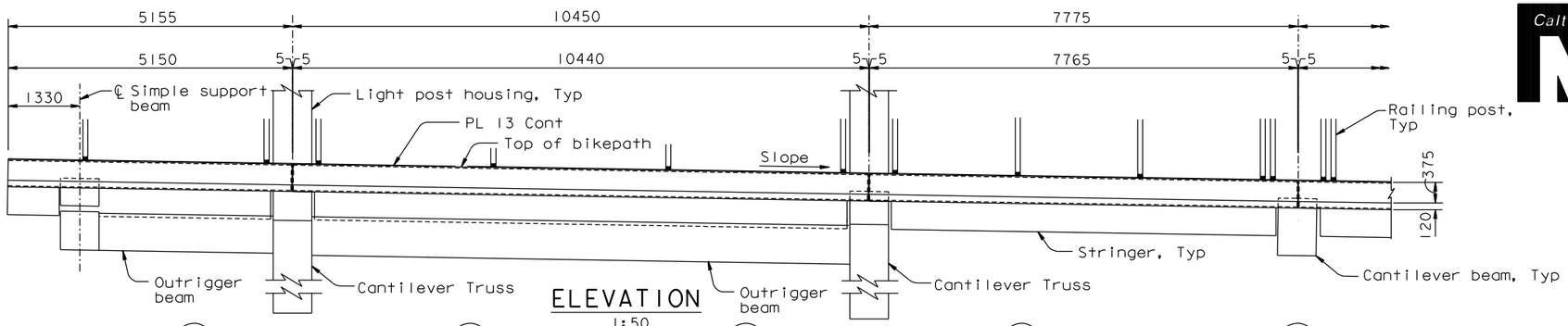

ELEVATION
1:50

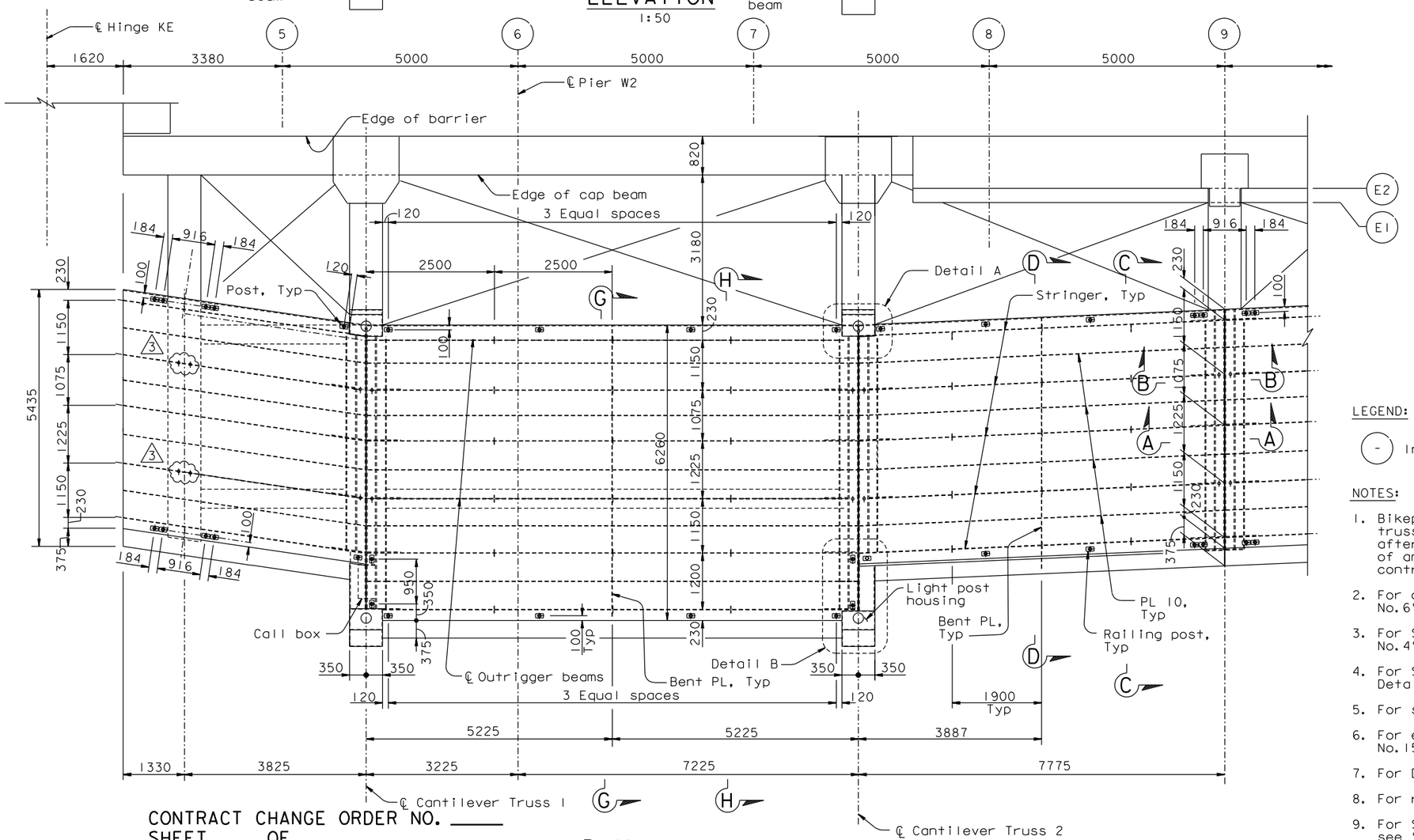

PLAN
1:50

LEGEND:

(-) Indicates Panel Point

NOTES:

1. Bikepath from Hinge KE to PP9 (including cantilever truss 1 and truss 2) shall be installed by Others after demolishing of existing structure. Installation of anchor bolts into W2 cap beam is part of this contract.
2. For cantilever truss details, see "Bikepath Details No.6" and "Bikepath Details No.7" sheets.
3. For Sections A-A and B-B, see "Bikepath Details No.4" sheet.
4. For Sections C-C, D-D, G-G and H-H, see "Bikepath Details No.2" sheet.
5. For stringer details, see "Bikepath Details" sheets.
6. For expansion joint details, see "Bikepath Details No.15" sheet.
7. For Details A and B, see "Railing Details No.4" sheet.
8. For railing layout, see "Railing Layout" sheets
9. For Section J-J similar and outrigger beam details, see "Bikepath Details No.8" sheet.

CONTRACT CHANGE ORDER NO. ____
SHEET ___ OF ___

REQUESTS FOR INFORMATION NOT ADDRESSED IN THIS CCO REMAIN IN FORCE

ALL DIMENSIONS ARE IN MILLIMETERS UNLESS OTHERWISE SHOWN

MARK	DATE	DESCRIPTIONS	BY	CH'D	CCO#
3	02/04/11	BIKEPATH STUD ISSUE	TH	JD	186
2	11/12/10	BIKEPATH HANDRAIL MODIFICATIONS	TH	JD	169
1	08/20/10	BIKEPATH DETAILS	CC	TH	99

REVISIONS

R. Valizadeh/V. Toan/Y.L./W.L./F.C.
DESIGN OVERSIGHT
Roya Valizadeh / Vong Toan / Y. Liu
SIGN OFF DATE 02/04/11

	BY	CHECKED
DESIGN	T. Ho	T. McMeans
DETAILS	R. Xu	P. Ritchie
QUANTITIES	C. Bernardo	S. Shi

PREPARED FOR THE STATE OF CALIFORNIA DEPARTMENT OF TRANSPORTATION

R. Manzanarez
PROJECT ENGINEER

BRIDGE NO. 34-0006L/R
KILOMETER POST 13.2/13.9

SAN FRANCISCO OAKLAND BAY BRIDGE
EAST SPAN SEISMIC SAFETY PROJECT
SELF-ANCHORED SUSPENSION BRIDGE
(SUPERSTRUCTURE & TOWER)

BIKEPATH FRAMING DETAILS NO.2

Rev. Date: 5-18-98

ORIGINAL SCALE IN MILLIMETERS FOR REDUCED PLANS 0 10 20 30 40 50 60 70 80 90 100

CU 04
EA 0120F1

DISREGARD PRINTS BEARING EARLIER REVISION DATES

REVISION DATES (PRELIMINARY STAGE ONLY) 05/31/01 04/08/02 07/04/02 12/19/02

SHEET 403R3 OF

FILE => I:\bb\04-012001\sas\contract plans and cco\cco\cco#186\2-revision 02-04-11\dgn\agbwf02.dgn

USERNAME => grivera DATE PLOTTED => 03 FEB 2011 TIME PLOTTED => 11:20:41

100 % PS&E

DIST.	COUNTY	ROUTE	KILOMETER POST TOTAL PROJECT	SHEET NO.	TOTAL SHEETS
04	SF	80	13.2/13.9	825R4	1204

Caltrans Metric

REGISTERED ENGINEER - CIVIL

12-6-04
PLANS APPROVAL DATE

The State of California or its officers or agents shall not be responsible for the accuracy or completeness of electronic copies of this plan sheet.

REGISTERED PROFESSIONAL ENGINEER Tien Hung Ho No. C 43990 Exp. 6/30/11 CIVIL STATE OF CALIFORNIA

T.Y. LIN / MOFFATT & NICHOL
825 BATTERY STREET
SAN FRANCISCO, CA 94111

Caltrans now has a web site! To get to the web site, go to: http://www.dot.ca.gov

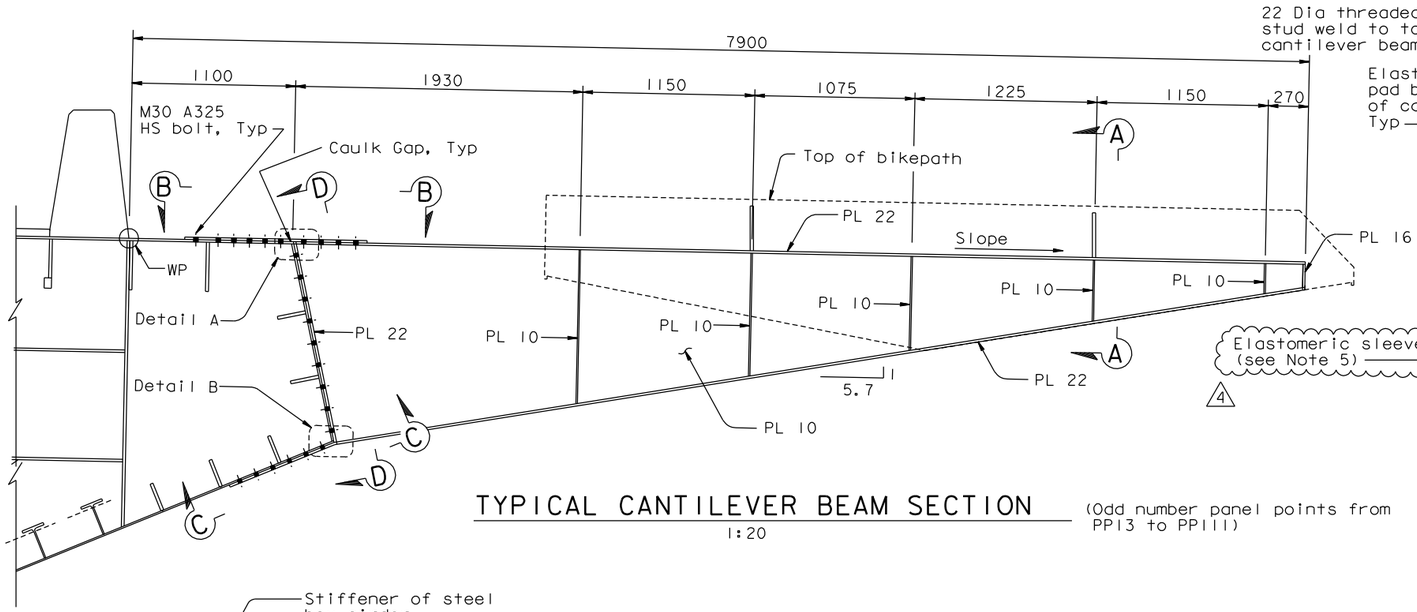

TYPICAL CANTILEVER BEAM SECTION
1:20

(Odd number panel points from PP13 to PP111)

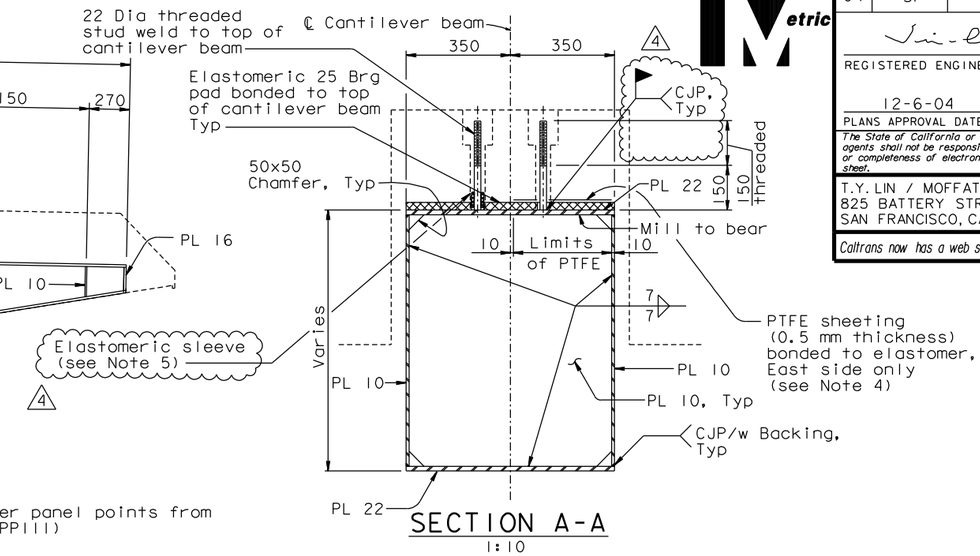

SECTION A-A
1:10

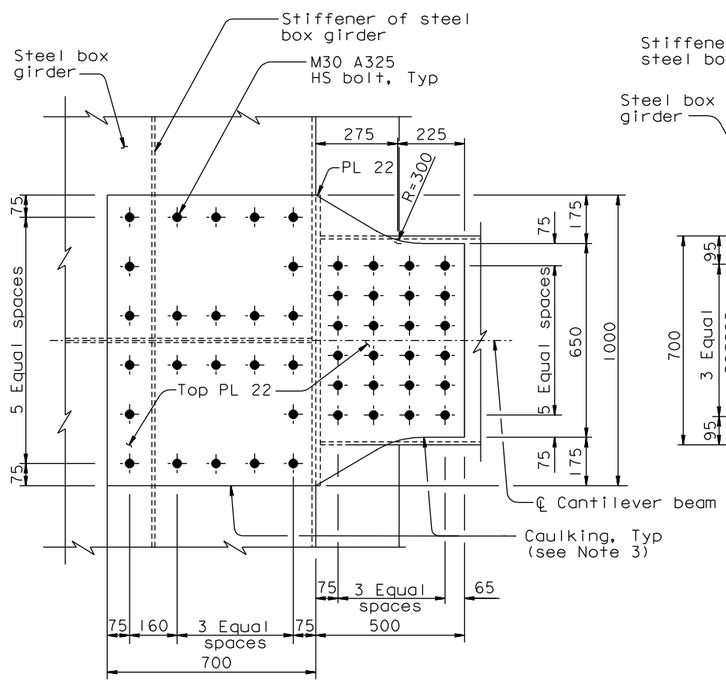

SECTION B-B
1:10

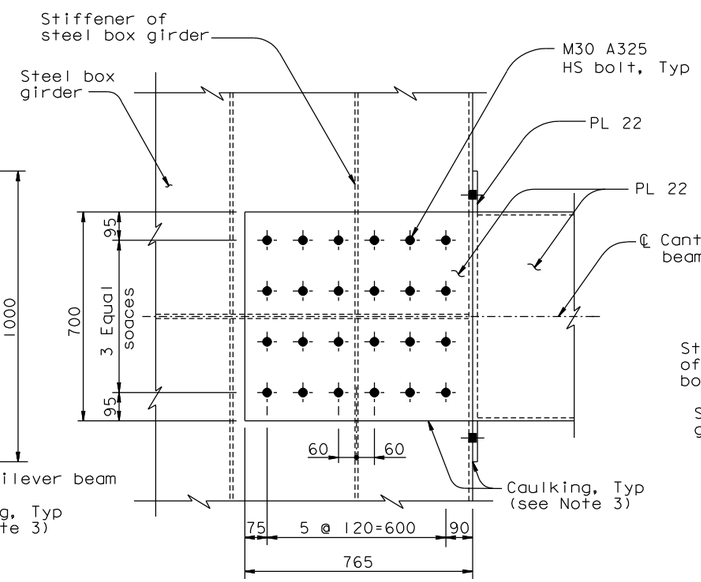

SECTION C-C
1:10

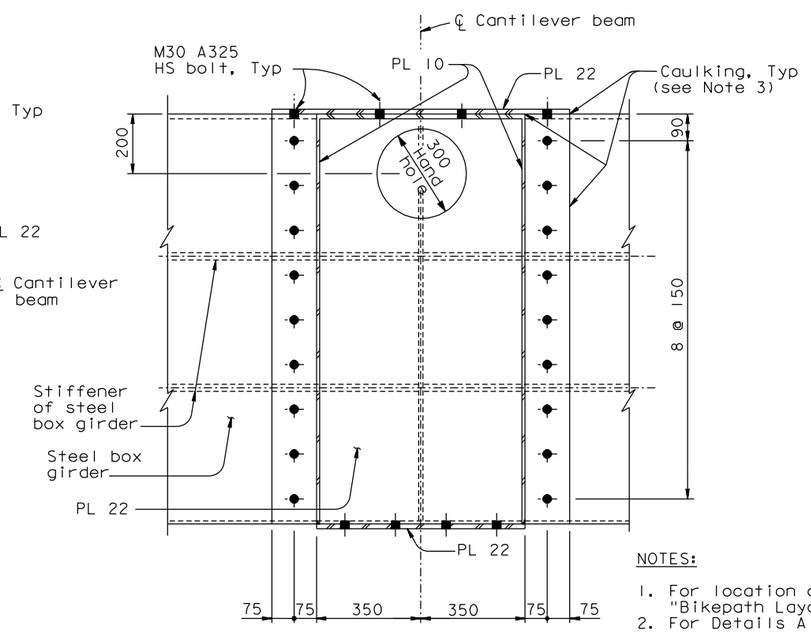

SECTION D-D
1:10

NOTES:

1. For location of typical cantilever beam, see "Bikepath Layout" sheets.
2. For Details A and B, see "Suspender Bracket Details No.2" sheet.
3. Caulking shall be provided along all edges of bolted connection between bikepath cantilever beam and box girder.
4. For limits of PTFE, see also "Elastomeric Bearing Pad" on "Bikepath Details No.4" sheet.
5. For elastomeric sleeve detail, see "Bikepath Details No.4A" sheet. (4)

CONTRACT CHANGE ORDER NO. ____
SHEET ____ OF ____

REQUESTS FOR INFORMATION NOT ADDRESSED IN THIS CCO REMAIN IN FORCE

MARK	DATE	DESCRIPTIONS	BY	CH'D	CCO#
4	01/25/11	BIKEPATH STUD ISSUE	CC	TH	186
3	08/20/10	BIKEPATH DETAILS	TH	CC	99
2	07/07/08	CAULKING	AS	TH	66
1	07/20/07	BIKEPATH BRACKETS	GB	TH	33

REVISIONS

R. Valizadeh/V. Toan/Y.L./W.L./F.C.
DESIGN OVERSIGHT
Roya Valizadeh / Vonw Toan / Y. Liu
SIGN OFF DATE 01/25/11

Rev. Date: 5-18-98

ALL DIMENSIONS ARE IN MILLIMETERS UNLESS OTHERWISE SHOWN

DESIGN	BY T. Ho	CHECKED T. McMeans	
DETAILS	BY R. Xu	CHECKED P. Ritchie	
QUANTITIES	BY C. Bernardo	CHECKED S. Shi	

PREPARED FOR THE STATE OF CALIFORNIA DEPARTMENT OF TRANSPORTATION

R. Manzanarez
PROJECT ENGINEER

BRIDGE NO. 34-0006L/R
KILOMETER POST 13.2/13.9

SAN FRANCISCO OAKLAND BAY BRIDGE
EAST SPAN SEISMIC SAFETY PROJECT
SELF-ANCHORED SUSPENSION BRIDGE
(SUPERSTRUCTURE & TOWER)

BIKEPATH DETAILS NO. 1

ORIGINAL SCALE IN MILLIMETERS FOR REDUCED PLANS 0 10 20 30 40 50 60 70 80 90 100

CU 04
EA 0120F1

DISREGARD PRINTS BEARING EARLIER REVISION DATES

REVISION DATES (PRELIMINARY STAGE ONLY) 05/18/99 08/02/99 05/31/01 04/08/02 07/09/02 12/18/02 11/13/05

SHEET 408R4 OF

FILE => L:\BB\04-012001\SAS\Contract Plans and CCO\CCO\CCO#186\1-Original 01-25-11\DGN\agbwd01.dgn

USERNAME => DWinrow DATE PLOTTED => 25 JAN 2011 TIME PLOTTED => 14:15:46

100% PS&E

DIST.	COUNTY	ROUTE	KILOMETER POST TOTAL PROJECT	SHEET NO.	TOTAL SHEETS
04	SF	80	13.2/13.9	828R3	1204

Caltrans Metric

REGISTERED ENGINEER - CIVIL

12-6-04
PLANS APPROVAL DATE

REGISTERED PROFESSIONAL ENGINEER Tien Hung Ho No. C 43990 Exp. 6/30/11 CIVIL STATE OF CALIFORNIA

The State of California or its officers or agents shall not be responsible for the accuracy or completeness of electronic copies of this plan sheet.

T.Y. LIN / MOFFATT & NICHOL
825 BATTERY STREET
SAN FRANCISCO, CA 94111

Caltrans now has a web site! To get to the web site, go to: http://www.dot.ca.gov

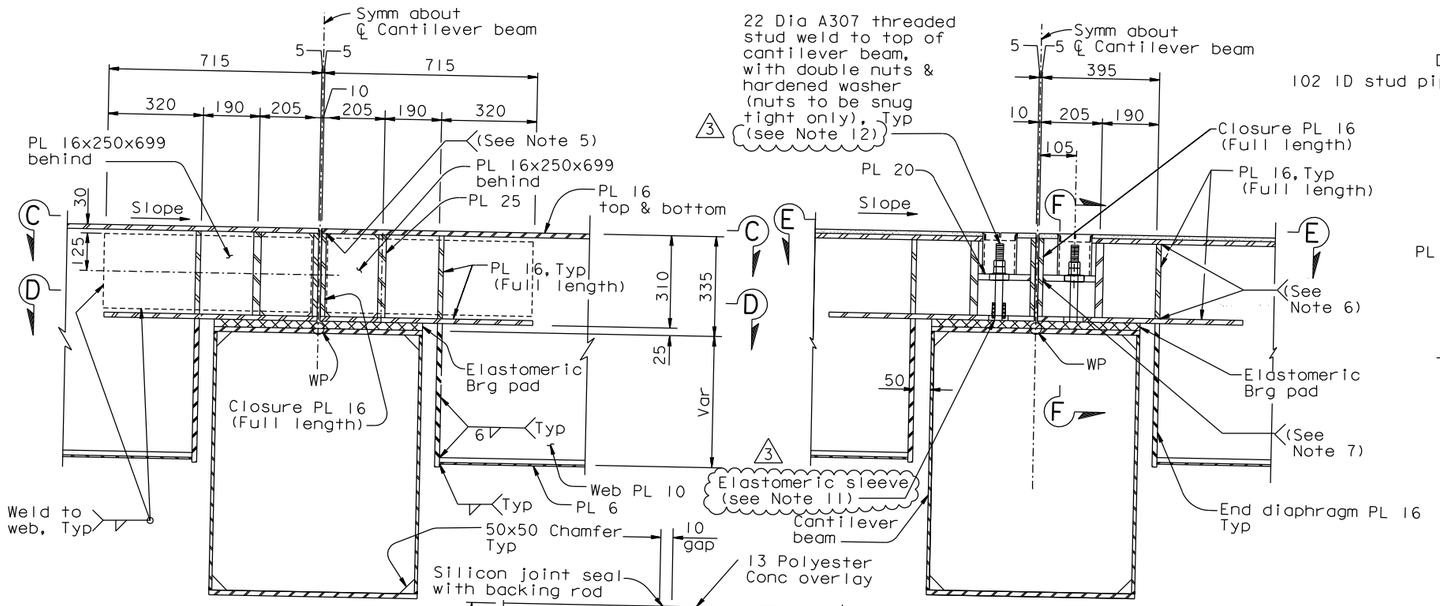

SECTION A-A (See Note 3)
1:10

SECTION B-B (See Note 3)
1:10

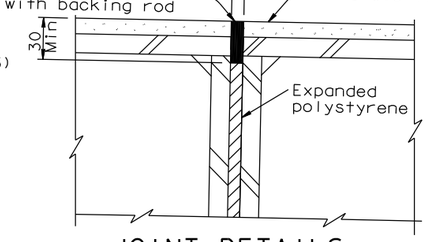

JOINT DETAILS
1:2.5

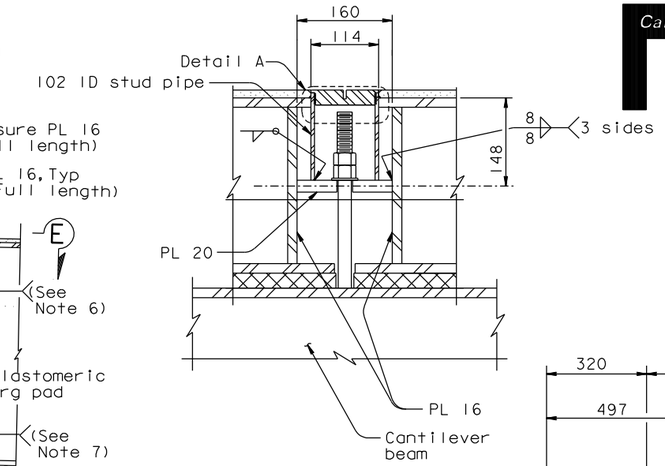

SECTION F-F
1:5

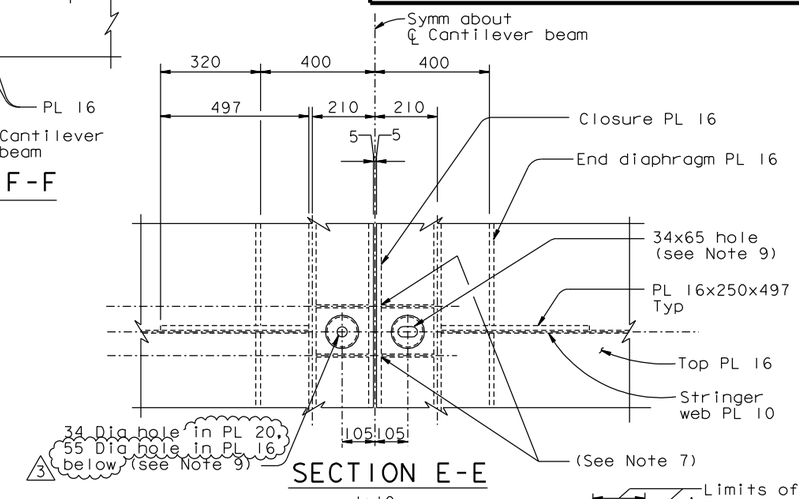

SECTION E-E
1:10

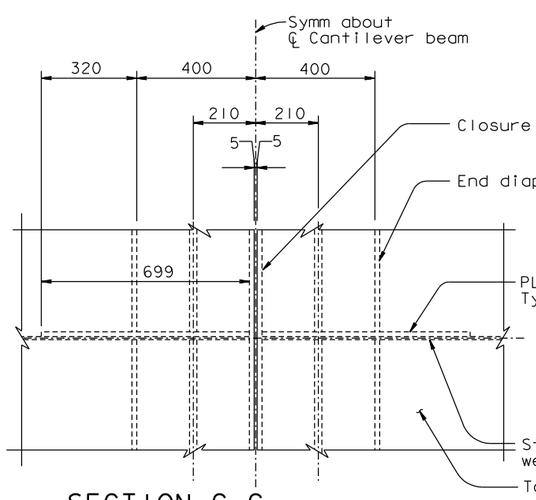

SECTION C-C
1:10

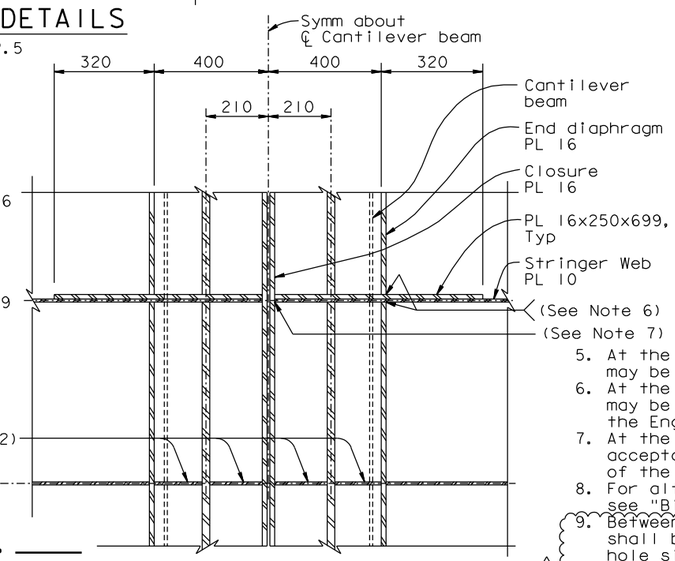

SECTION D-D
1:10

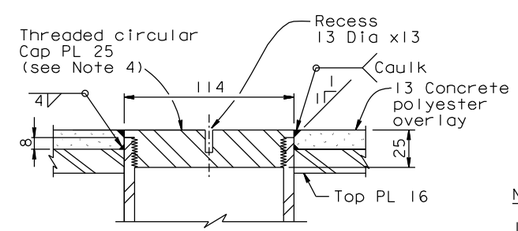

DETAIL A
1:2

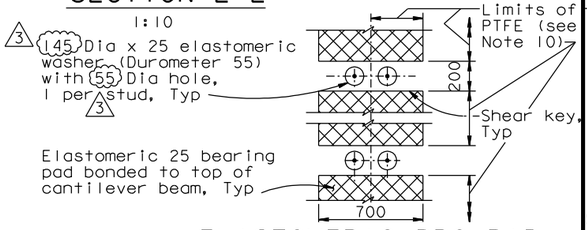

ELASTOMERIC BRG PAD
1:20

11. For elastomeric sleeve detail, see "Bikepath Details No.4A" sheet.
12. ASTM A108 Grade C1018, with mechanical properties conforming to that of Type B Studs in AWS D1.1 Table 7.1, may be used in lieu of ASTM A307.

5. At the Contractor's option, 10mm effective PJP may be used all around edges of the Closure PL 16.
6. At the Contractor's option, 10mm effective PJP may be used subject to review and approval of the Engineer.
7. At the Contractor's option, tight-fit is acceptable, subject to review and approval of the Engineer.
8. For alternate elastomeric bearing pad details, see "Bikepath Details No.4A" sheet.
9. Between PP 117 and PP 121, the slotted hole size shall be 44x75 in both PL 20 and PL 16 below. The round hole size shall be 44 Dia in PL 20 and 65 Dia in PL 16 below. Elastomeric washer hole shall be 55 Dia.
10. For PTFE details, see Section A-A on "Bikepath Details No.1" sheet.

NOTES:

1. For location of Sections A-A and B-B, see "Bikepath Framing Details No.1" through "Bikepath Framing Details No.6" sheets.
2. At the Contractor's option, Rib PL 10 may be omitted in area bounded by End Diaphragm PL 16 and Closure PL 16, subject to review and approval of the Engineer.
3. At the Contractor's option, CJP with backing, or 8mm double sided fillets may be used in lieu of CJP, subject to review and approval of the Engineer.
4. The threaded cap shall be supplied with two recesses spaced apart such that the cap can be installed with the aid of a spanner wrench. The recesses shall not penetrate the plate. The Contractor may propose alternate details for opening and closing the threaded cap, subject to review and approval of the Engineer. Threads shall follow ANSI standards. The Contractor may propose an alternate threading detail, subject to review and approval of the Engineer.

CONTRACT CHANGE ORDER NO. ____
SHEET ____ OF ____

REQUESTS FOR INFORMATION NOT ADDRESSED IN THIS CCO REMAIN IN FORCE

MARK	DATE	DESCRIPTIONS	BY	CH'D	CCO#
3	02/04/11	BIKEPATH STUD ISSUE	CC	TH	186
2	08/20/10	BIKEPATH DETAILS	CC	TH	99
1	07/24/09	BIKEPATH DETAILS	CC	TH	99

REVISIONS

R. Valizadeh/V. Toan/Y.L./W.L./F.C.
DESIGN OVERSIGHT
Roya Valizadeh / Vong Toan / Y. Liu
SIGN OFF DATE 02/04/11

Rev. Date: 5-18-98

DESIGN	BY T. Ho	CHECKED T. McMeans	
DETAILS	BY R. Xu	CHECKED P. Ritchie	
QUANTITIES	BY C. Bernardo	CHECKED S. Shi	

PREPARED FOR THE STATE OF CALIFORNIA DEPARTMENT OF TRANSPORTATION

R. Manzanarez
PROJECT ENGINEER

BRIDGE NO. 34-0006L/R
KILOMETER POST 13.2/13.9

ALL DIMENSIONS ARE IN MILLIMETERS UNLESS OTHERWISE SHOWN

SAN FRANCISCO OAKLAND BAY BRIDGE
EAST SPAN SEISMIC SAFETY PROJECT
SELF-ANCHORED SUSPENSION BRIDGE
(SUPERSTRUCTURE & TOWER)

BIKEPATH DETAILS NO. 4

ORIGINAL SCALE IN MILLIMETERS FOR REDUCED PLANS 0 10 20 30 40 50 60 70 80 90 100

CU 04
EA 0120F1

DISREGARD PRINTS BEARING EARLIER REVISION DATES

REVISION DATES (PRELIMINARY STAGE ONLY) 08/02/99 05/31/01 04/08/02 01/07/02 12/13/02 11/13/05

SHEET 411R3 OF

FILE => I:\bb\04-012001\sas\contract plans and cco\cco\cco#186\2-revision 02-04-11\dgn\agbwd04.dgn

USERNAME => crivera DATE PLOTTED => 03 FEB 2011 TIME PLOTTED => 11:22:05

100 % PS&E

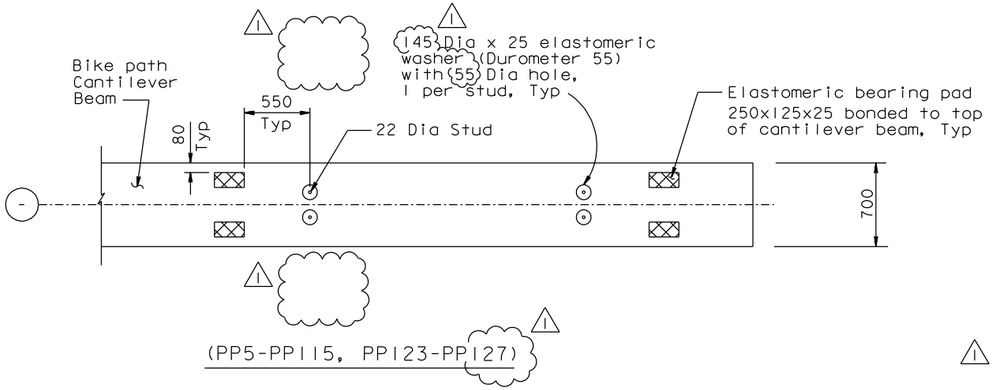

(PP5-PP115, PP123-PP127)

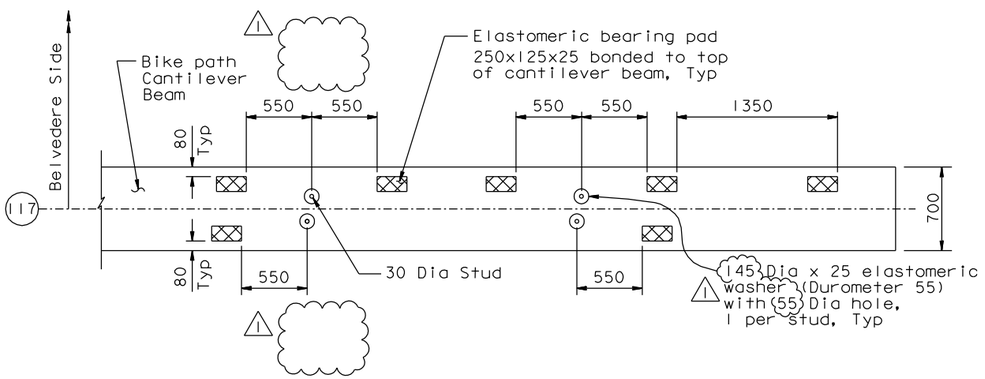

(PP117 SHOWN, PP121 OPPOSITE)

ALTERNATE ELASTOMERIC BEARING PAD

1:25

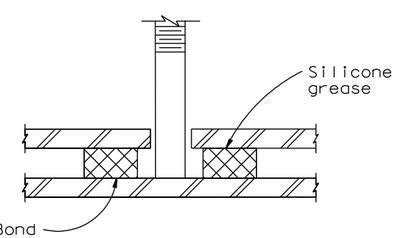

ELASTOMERIC WASHER DETAIL

1:2.5

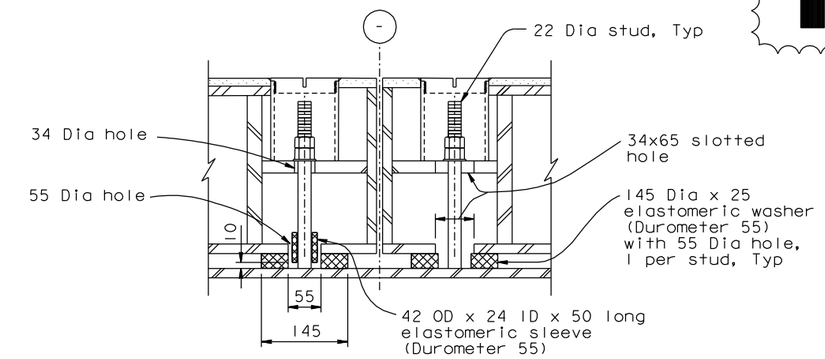

(PP5-PP115, PP123-PP127)

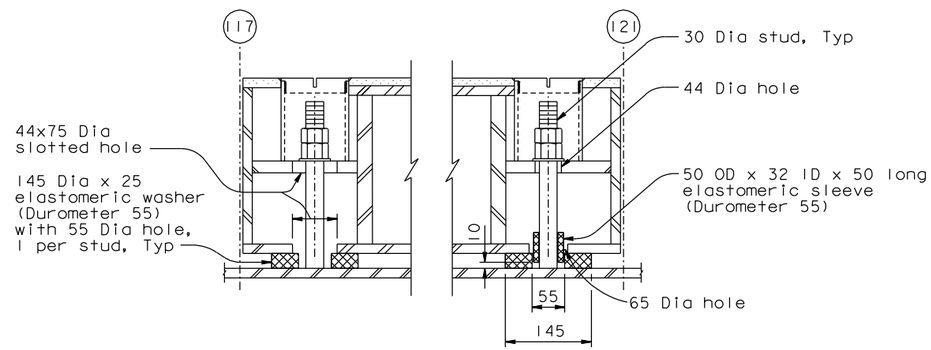

(PP117-PP121)

1:5

ELASTOMERIC SLEEVE DETAIL

1:5

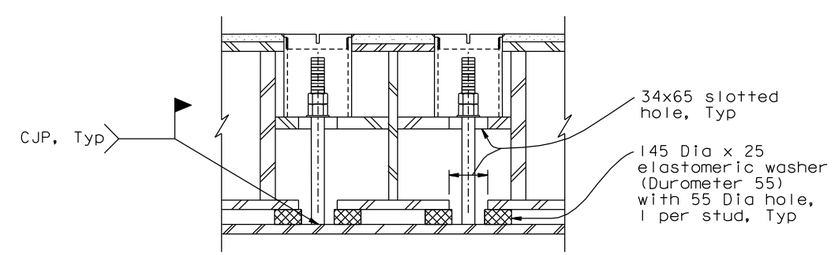

SECTION F-F

1:5

CONTRACT CHANGE ORDER NO. _____
SHEET ____ OF ____

REQUESTS FOR INFORMATION NOT ADDRESSED IN THIS CCO REMAIN IN FORCE

ALL DIMENSIONS ARE IN MILLIMETERS UNLESS OTHERWISE SHOWN

DIST.	COUNTY	ROUTE	KILOMETER POST TOTAL PROJECT	SHEET NO.	TOTAL SHEETS
04	SF	80	13.2/13.9	828SIRI	1204

REGISTERED ENGINEER - CIVIL

08-20-10
PLANS APPROVAL DATE

REGISTERED PROFESSIONAL ENGINEER Tien Hung Ho No. C 43990 Exp. 06/30/11 CIVIL STATE OF CALIFORNIA

The State of California or its officers or agents shall not be responsible for the accuracy or completeness of electronic copies of this plan sheet.

T.Y. LIN / MOFFATT & NICHOL
825 BATTERY STREET
SAN FRANCISCO, CA 94111

Caltrans now has a web site! To get to the web site, go to: http://www.dot.ca.gov

Caltrans Metric

100 % PS&E

MARK	DATE	DESCRIPTIONS	BY	CH'D	CCO#
1	01/25/11	BIKEPATH STUD ISSUE	TH	CC	186
0	08/20/10	BIKEPATH DETAILS	CC	TH	99

REVISIONS

R. Valizadeh/V. Toan/Y.L./W.L./F.C.
DESIGN OVERSIGHT
SIGN OFF DATE 01/25/11

	BY	CHECKED
DESIGN	C. Choi	T. Ho
DETAILS	C. Choi	T. Ho
QUANTITIES	C. Choi	T. Ho

PREPARED FOR THE STATE OF CALIFORNIA DEPARTMENT OF TRANSPORTATION

R. Manzanarez
PROJECT ENGINEER

BRIDGE NO. 34-0006L/R
KILOMETER POST 13.2/13.9

SAN FRANCISCO OAKLAND BAY BRIDGE
EAST SPAN SEISMIC SAFETY PROJECT
SELF-ANCHORED SUSPENSION BRIDGE
(SUPERSTRUCTURE & TOWER)

BIKEPATH DETAILS NO. 4A

Rev. Date: 5-18-98

ORIGINAL SCALE IN MILLIMETERS FOR REDUCED PLANS 0 10 20 30 40 50 60 70 80 90 100

CU 04
EA 0120F1

DISREGARD PRINTS BEARING EARLIER REVISION DATES 08/20/10

REVISION DATES (PRELIMINARY STAGE ONLY)

SHEET 411SIRI OF

FILE => I:\bb\04-012001\sas\contract plans and cco\cco\cco#186\1-original 01-25-11\dgn\agbwd04a.dgn

USERNAME => DWinrow DATE PLOTTED => 25 JAN 2011 TIME PLOTTED => 14:18:51

Caltrans now has a web site! To get to the web site, go to: http://www.dot.ca.gov

DIST.	COUNTY	ROUTE	KILOMETER POST TOTAL PROJECT	SHEET NO.	TOTAL SHEETS
04	SF	80	13.2/13.9	829R4	1204

REGISTERED ENGINEER - CIVIL

12-6-04
PLANS APPROVAL DATE

The State of California or its officers or agents shall not be responsible for the accuracy or completeness of electronic copies of this plan sheet.

REGISTERED PROFESSIONAL ENGINEER Tien Hung Ho No. C 43990 Exp. 6/30/11 CIVIL STATE OF CALIFORNIA

T.Y. LIN / MOFFATT & NICHOL
825 BATTERY STREET
SAN FRANCISCO, CA 94111

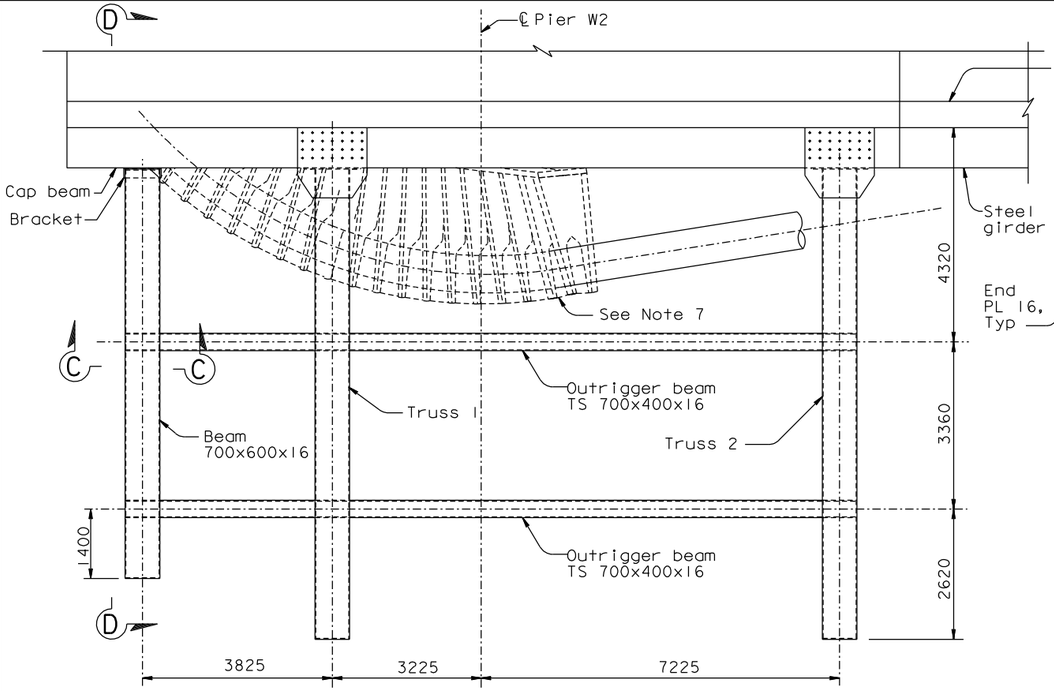

BIKEPATH PARTIAL PLAN AT CAP BEAM

1:60

NOTE: Stringer not shown, for clarity

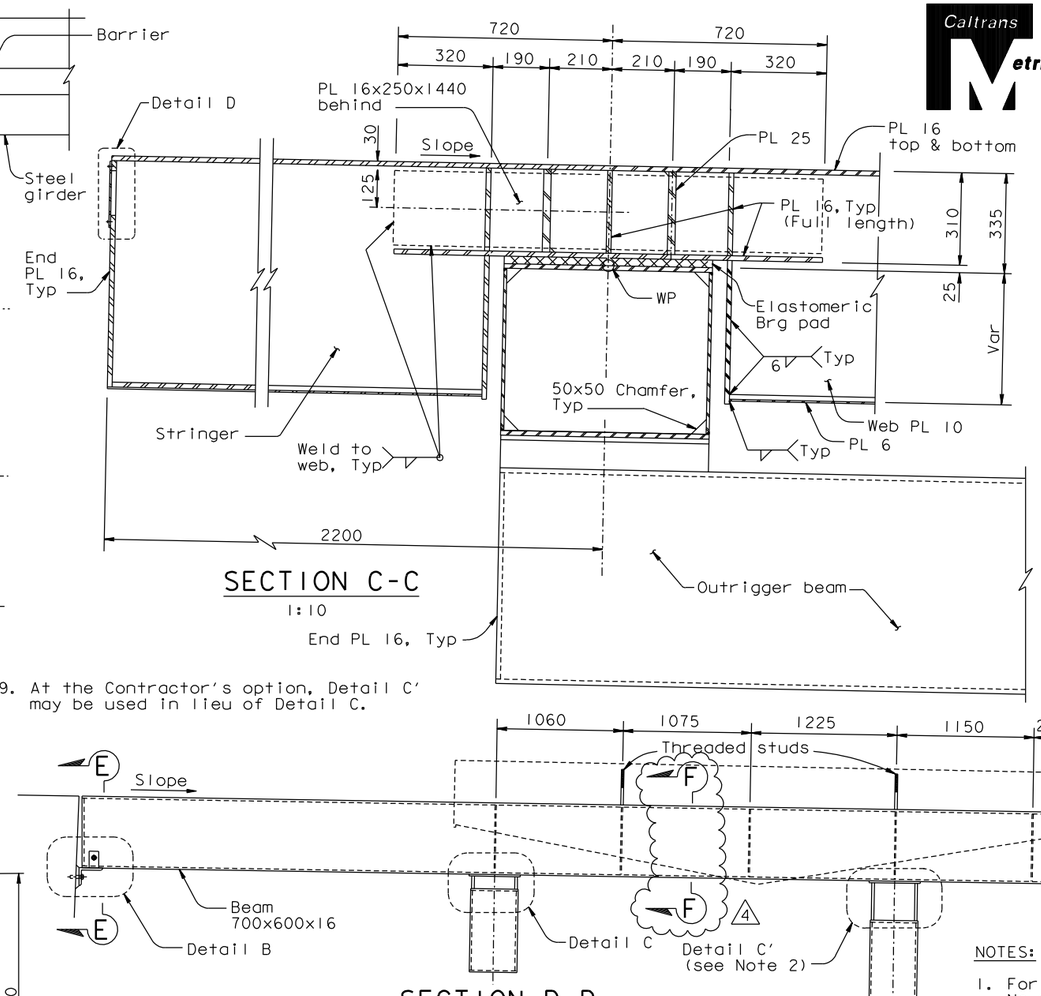

SECTION C-C

1:10

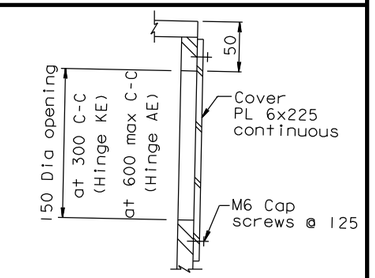

DETAIL D

1:3

9. At the Contractor's option, Detail C' may be used in lieu of Detail C.

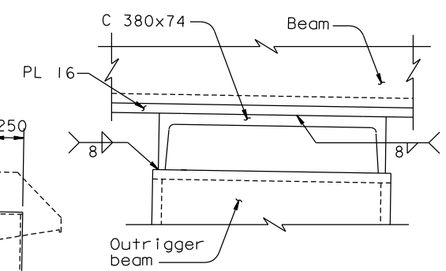

DETAIL C

1:5 (See Note 9)

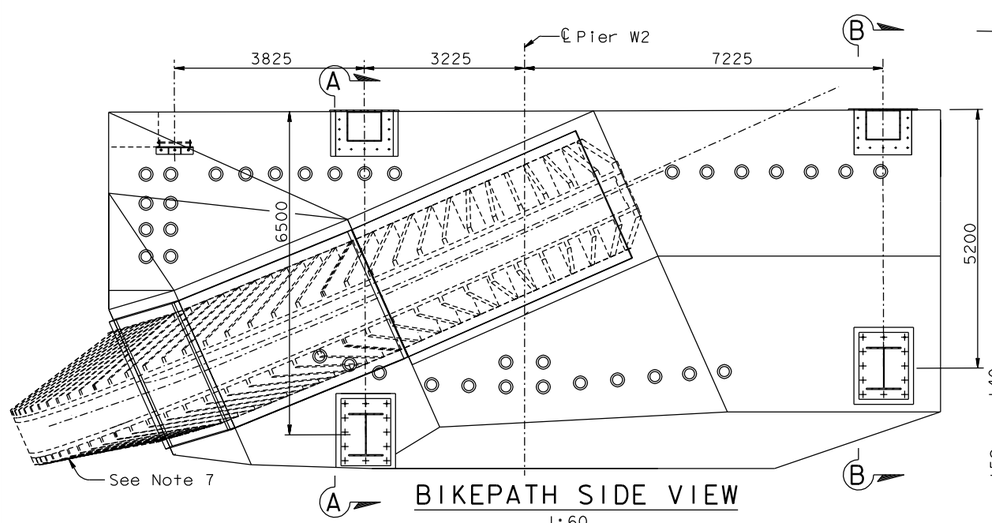

BIKEPATH SIDE VIEW

1:60

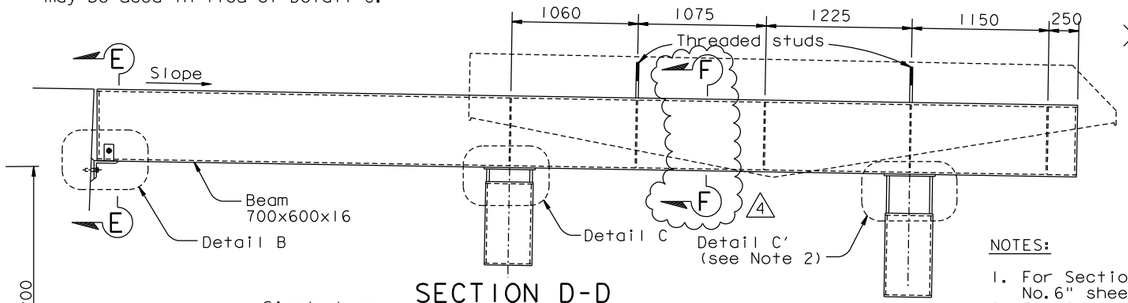

SECTION D-D

1:25

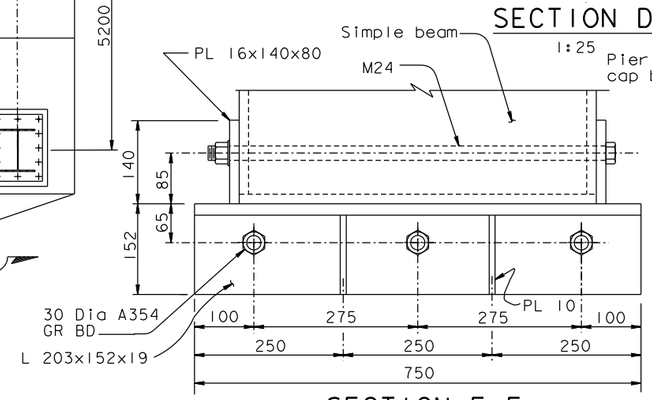

SECTION E-E

1:5

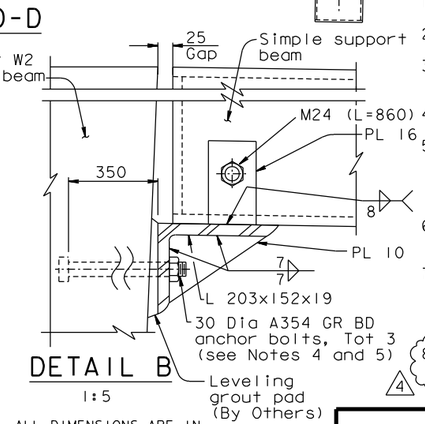

DETAIL B

1:5

ALL DIMENSIONS ARE IN MILLIMETERS UNLESS OTHERWISE SHOWN

NOTES:

1. For Section A-A, see "Bikepath Details No.6" sheet.
2. For Section B-B and Detail C', see "Bikepath Details No.7" sheet.
3. Cantilever Truss 1, Truss 2 and outrigger beams to be installed by Others after demolition of existing structure.
4. The tolerance for placement of the anchor bolts is ±25 mm.
5. The Contractor shall survey the as-built anchor bolt locations and prepare a template. This template shall be trial fit in the field prior to drilling the holes in the angle.
6. The Contractor shall furnish all anchor bolt components and shall provide corrosion protection covering exposed ends.
7. Views of the deviation saddle are for illustration only. For deviation saddle details, see "West Deviation Saddle Details" sheets.
8. For Section F-F, see "Bikepath Details No.4A" sheet. (4)

CONTRACT CHANGE ORDER NO. _____
SHEET ____ OF ____

REQUESTS FOR INFORMATION NOT ADDRESSED IN THIS CCO REMAIN IN FORCE

MARK	DATE	DESCRIPTIONS	BY	CH'D	CCO#
4	01/25/11	BIKEPATH STUD ISSUE	TH	CC	186
3	11/12/10	MISCELLANEOUS BIKEPATH DETAILS	CC	TH	172
2	08/20/10	BIKEPATH DETAILS	CC	TH	99
1	05/04/07	W2 CAP BEAM ISD RESOLUTION	AS	TH	34SI

REVISIONS

R. Valizadeh/V. Toan/Y.L./W.L./F.C.
DESIGN OVERSIGHT
SIGN OFF DATE 01/25/11

	BY	CHECKED
DESIGN	T. Ho	T. McMeans
DETAILS	R. Xu	P. Ritchie
QUANTITIES	C. Bernardo	S. Shi

PREPARED FOR THE STATE OF CALIFORNIA DEPARTMENT OF TRANSPORTATION

R. Manzanarez
PROJECT ENGINEER

BRIDGE NO. 34-0006L/R
KILOMETER POST 13.2/13.9

SAN FRANCISCO OAKLAND BAY BRIDGE
EAST SPAN SEISMIC SAFETY PROJECT
SELF-ANCHORED SUSPENSION BRIDGE
(SUPERSTRUCTURE & TOWER)

BIKEPATH DETAILS NO.5

Rev. Date: 5-18-98

ORIGINAL SCALE IN MILLIMETERS FOR REDUCED PLANS 0 10 20 30 40 50 60 70 80 90 100

CU 04
EA 0120F1

DISREGARD PRINTS BEARING EARLIER REVISION DATES

REVISION DATES (PRELIMINARY STAGE ONLY) 05/31/01 04/08/02 07/01/02 12/19/02 09/08/04 11/13/05

SHEET 412R4 OF

FILE => I:\bb\04-012001\sas\contract plans and cco\cco\cco#186\1-original 01-25-11\dgn\agbwd05.dgn

USERNAME => DWinrow DATE PLOTTED => 25 JAN 2011 TIME PLOTTED => 14:20:05

100% PS&E

DIST.	COUNTY	ROUTE	KILOMETER POST TOTAL PROJECT	SHEET NO.	TOTAL SHEETS
04	SF	80	13.2/13.9	832R3	1204

REGISTERED ENGINEER - CIVIL

12-06-04
PLANS APPROVAL DATE

The State of California or its officers or agents shall not be responsible for the accuracy or completeness of electronic copies of this plan sheet.

REGISTERED PROFESSIONAL ENGINEER Tien Hung Ho No. C 43990 Exp. 6/30/11 CIVIL STATE OF CALIFORNIA

T.Y. LIN / MOFFATT & NICHOL
825 BATTERY STREET
SAN FRANCISCO, CA 94111

Caltrans now has a web site! To get to the web site, go to: http://www.dot.ca.gov

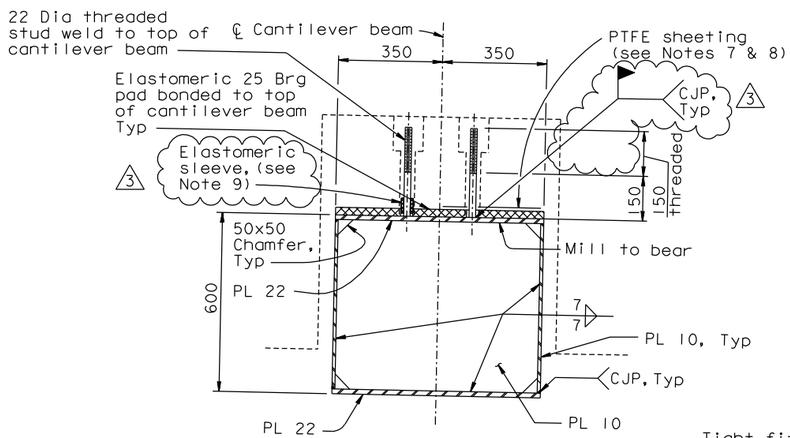

SECTION C-C
1:10

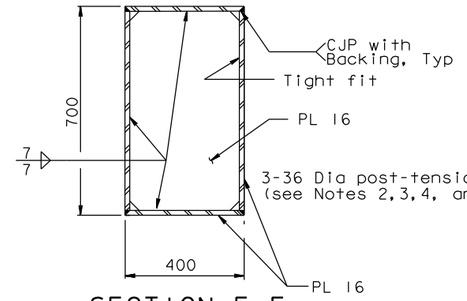

SECTION E-E
1:10

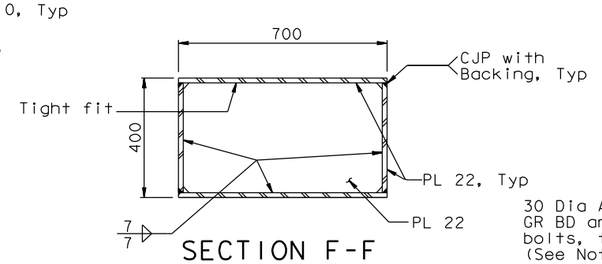

SECTION F-F
1:10

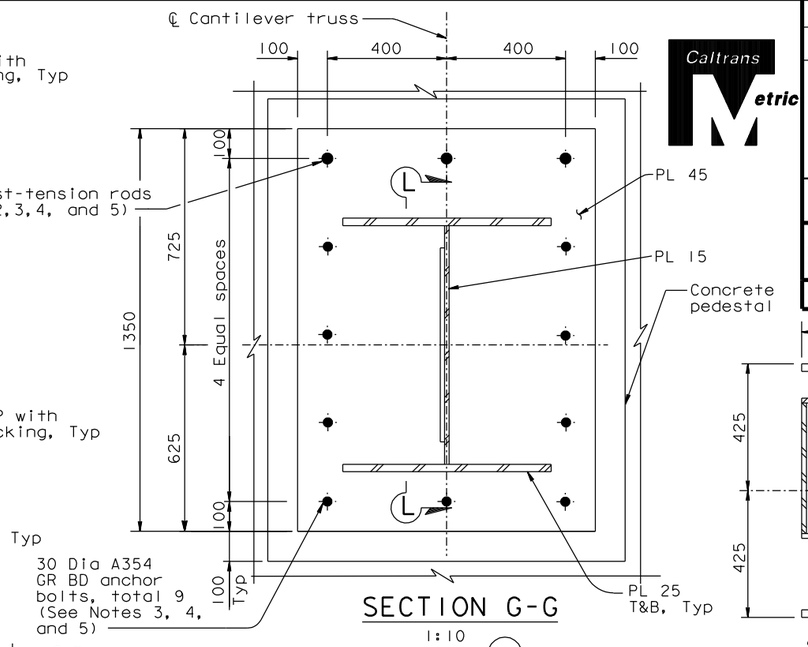

SECTION G-G
1:10

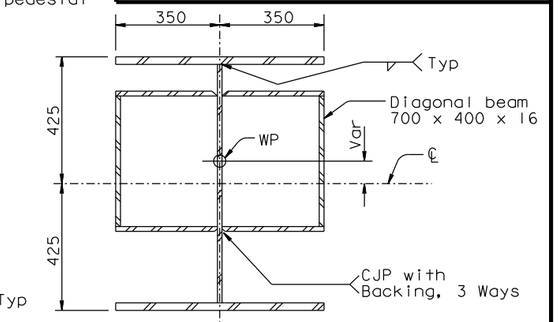

SECTION H-H
1:10

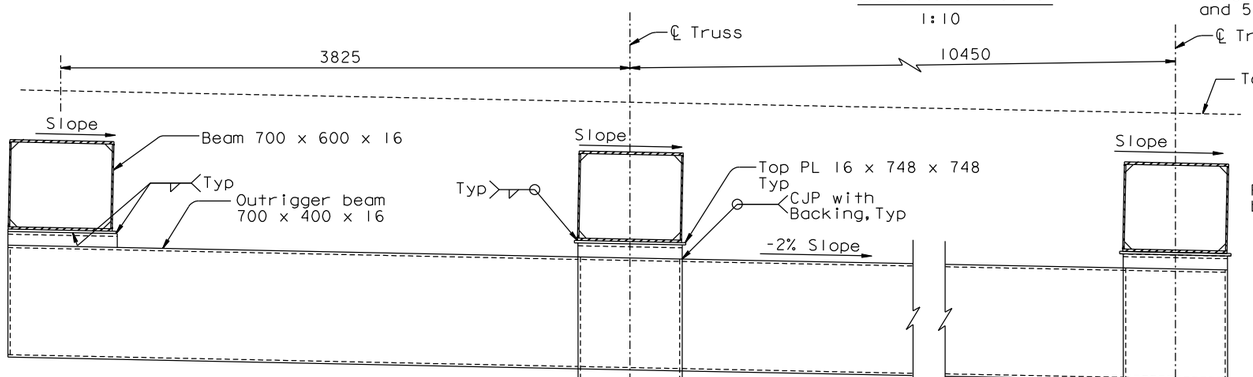

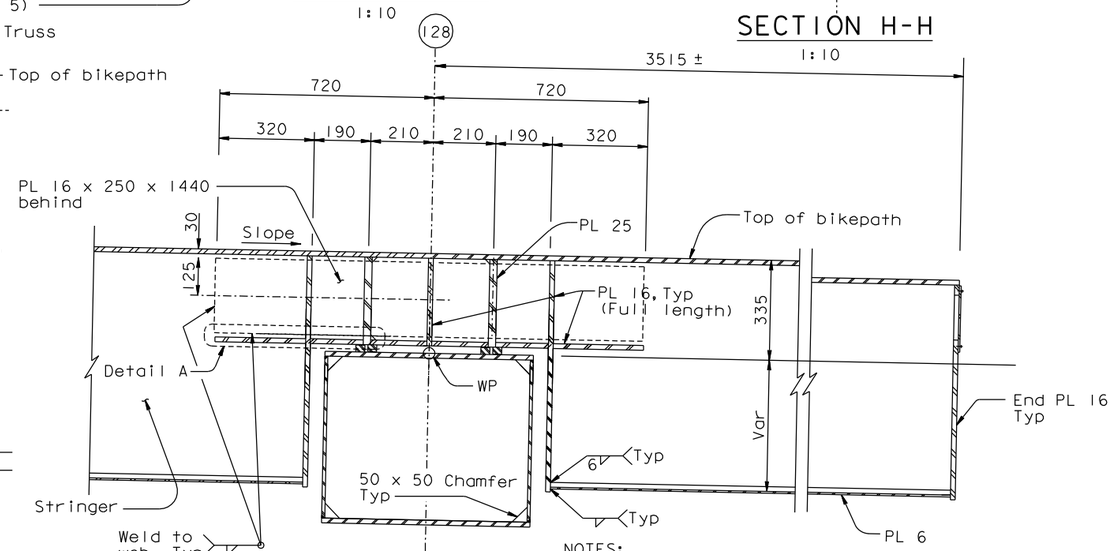

SECTION J-J
1:10
(See Note 6)

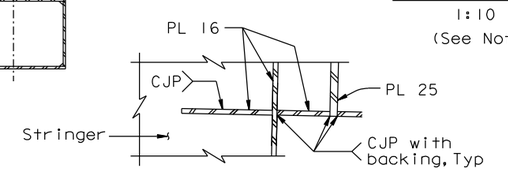

DETAIL A
1:10

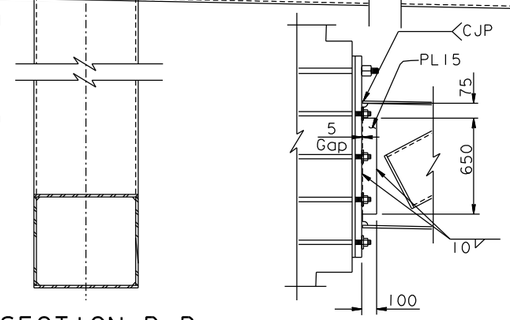

SECTION D-D
1:20

SECTION L-L
1:20

4. The Contractor shall survey the as-built PT rod and anchor bolt locations and prepare a template. This template shall be trial fit in the field prior to drilling the holes in the base plate.
5. The Contractor shall furnish all PT and anchor bolt components, and shall provide corrosion protection covering exposed ends.
6. For details not shown, see "Bikepath Details No.17, 18 & 19" sheets.
7. For limits of PTFE, see also "Elastomeric Bearing Pad" on "Bikepath Details No.4" sheet.
8. For PTFE sheeting, see similar Section A-A on "Bikepath Details No.1" and "Bikepath Details No.4" sheets.
9. For elastomeric sleeve detail, see "Bikepath Details No.4A" sheet.

3

NOTES:

1. For Detail D, see "Bikepath Details No.5" sheet.
2. PT rods are ASTM A722 high strength 36 Dia rods (Fu=1030 MPa), with standard galvanized steel ducts, unless specified otherwise. The jacking force of 734 KN to be applied by Others. The Contractor may substitute the PT duct with a PT supplier recommended debonding tape, subject to review and approval of the Engineer. If the PT duct substitution is approved by the Engineer, the spherical nut inside the W2 cap beam is not required.
3. The tolerance for placement of the PT rods and anchor bolts is ±25 mm.

CONTRACT CHANGE ORDER NO. ____
SHEET ____ OF ____

REQUESTS FOR INFORMATION NOT ADDRESSED IN THIS CCO REMAIN IN FORCE

ALL DIMENSIONS ARE IN MILLIMETERS UNLESS OTHERWISE SHOWN

MARK	DATE	DESCRIPTIONS	BY	CH'D	CCO#
3	01/25/11	BIKEPATH STUD ISSUE	TH	CC	186
2	08/20/10	BIKEPATH DETAILS	TH	CC	99
1	05/04/07	W2 CAP BEAM ISD RESOLUTION	JD	TH	34SI

REVISIONS

R. Valizadeh/V. Toan/Y.L./W.L./F.C.
DESIGN OVERSIGHT
SIGN OFF DATE 01/25/11

	BY	CHECKED
DESIGN	T. Ho	T. McMeans
DETAILS	R. Xu	P. Ritchie
QUANTITIES	C. Bernardo	S. Shi

PREPARED FOR THE STATE OF CALIFORNIA DEPARTMENT OF TRANSPORTATION

R. Manzanarez
PROJECT ENGINEER

BRIDGE NO. 34-0006L/R
KILOMETER POST 13.2/13.9

SAN FRANCISCO OAKLAND BAY BRIDGE
EAST SPAN SEISMIC SAFETY PROJECT
SELF-ANCHORED SUSPENSION BRIDGE
(SUPERSTRUCTURE & TOWER)

BIKEPATH DETAILS NO. 8

Rev. Date: 5-18-98

ORIGINAL SCALE IN MILLIMETERS FOR REDUCED PLANS 0 10 20 30 40 50 60 70 80 90 100

CU 04
EA 0120F1

DISREGARD PRINTS BEARING EARLIER REVISION DATES

REVISION DATES (PRELIMINARY STAGE ONLY) 05/31/01 04/08/02 07/01/02 12/18/02 11/13/05

SHEET 415R3 OF

FILE => I:\bb\04-012001\sas\contract plans and cco\cco\cco#186\1-original 01-25-11\dgn\agbwd08.dgn

100% PS&E

USERNAME => DWinrow DATE PLOTTED => 25 JAN 2011 TIME PLOTTED => 14:21:08

DIST.	COUNTY	ROUTE	KILOMETER POST TOTAL PROJECT	SHEET NO.	TOTAL SHEETS
04	SF	80	13.2/13.9	833R4	1204

Caltrans Metric

REGISTERED ENGINEER - CIVIL

12-6-04
PLANS APPROVAL DATE

REGISTERED PROFESSIONAL ENGINEER Tien Hung Ho No. C 43990 Exp. 6/30/11 CIVIL STATE OF CALIFORNIA

The State of California or its officers or agents shall not be responsible for the accuracy or completeness of electronic copies of this plan sheet.

T.Y. LIN / MOFFATT & NICHOL
825 BATTERY STREET
SAN FRANCISCO, CA 94111

Caltrans now has a web site! To get to the web site, go to: http://www.dot.ca.gov

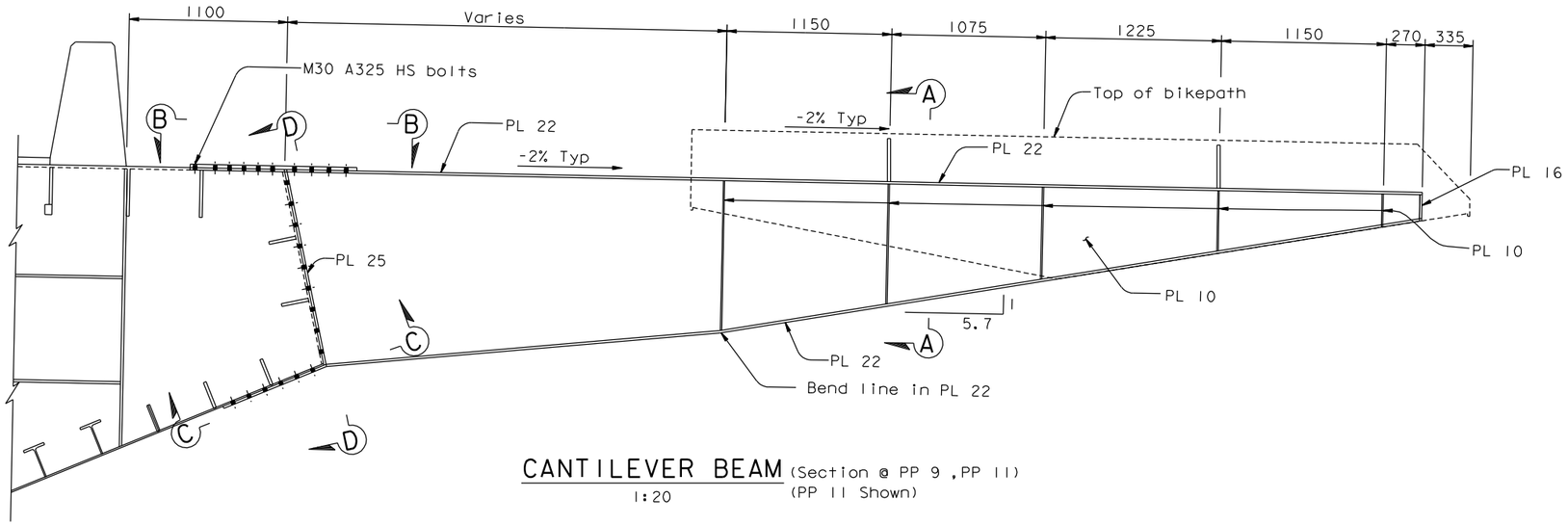

CANTILEVER BEAM (Section @ PP 9 ,PP 11)
1:20 (PP 11 Shown)

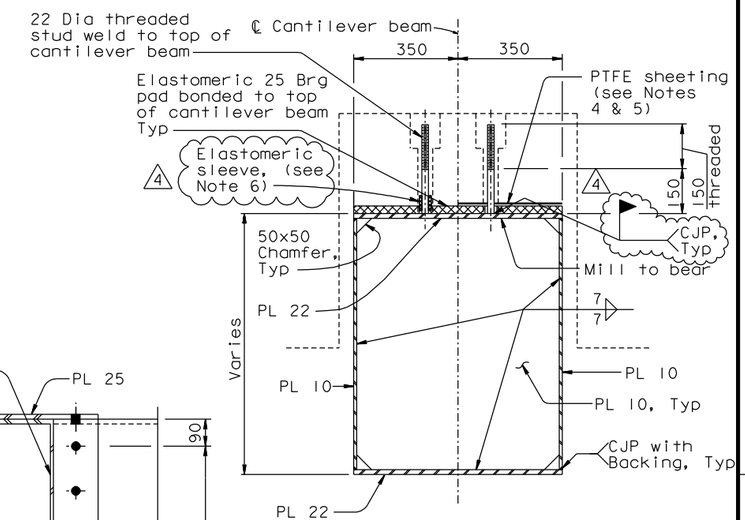

SECTION A-A
1:10

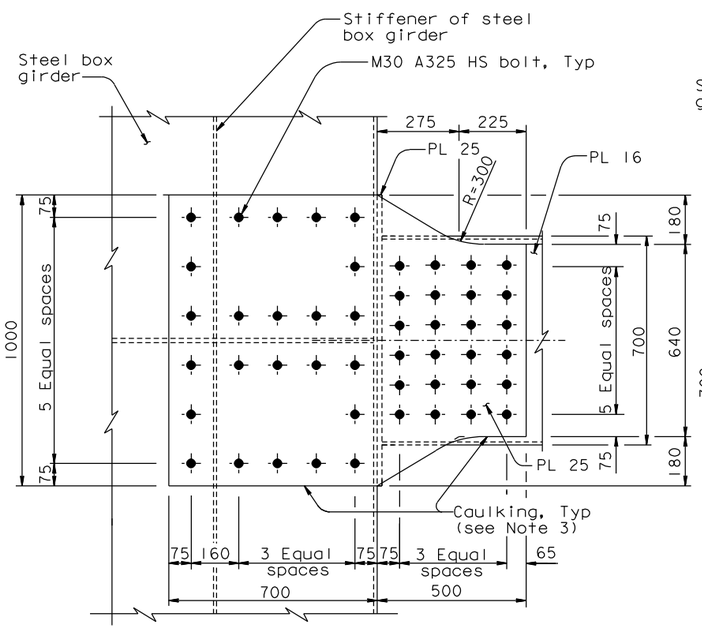

SECTION B-B
1:10

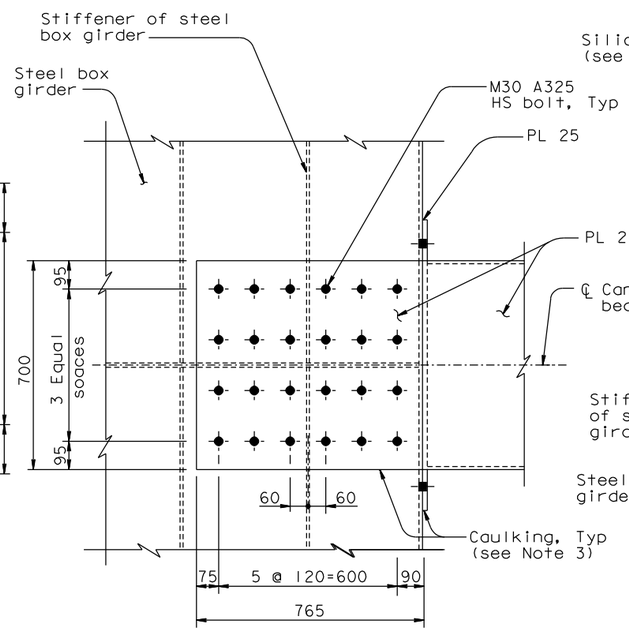

SECTION C-C
1:10

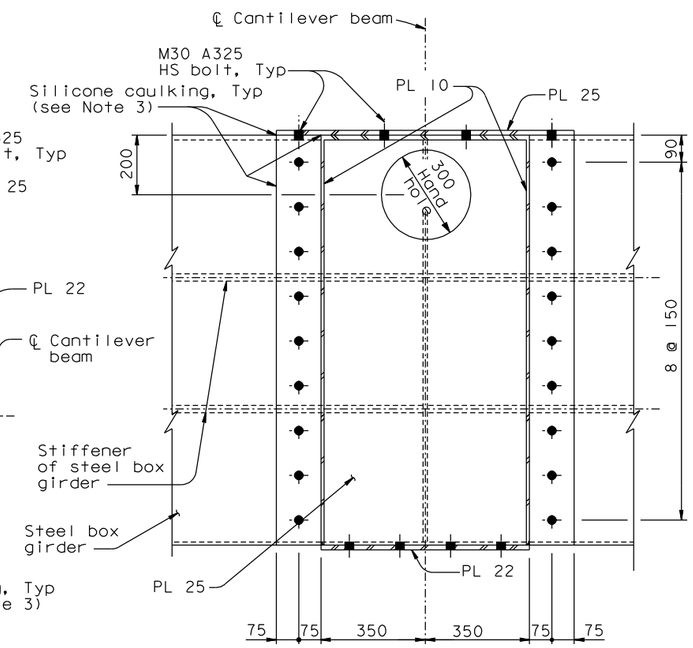

SECTION D-D
1:10

NOTES:

1. Bikepath deck similar to typical bikepath deck. For details, see "Bikepath Details No.3" sheet.
2. For details not shown, see "Bikepath Details No.1" sheet.
3. Caulking shall be provided along edges of bolted connection between bikepath cantilever beam and box girder.
4. For PTFE sheeting see similar Section A-A on "Bikepath Details No.4" sheet.
5. For limits of PTFE see also "Elastomeric Bearing Pad" on "Bikepath Details No.4" sheet.
6. For elastomeric sleeve detail, see "Bikepath Details No.4A" sheet. (4)

CONTRACT CHANGE ORDER NO. ____
SHEET ____ OF ____

REQUESTS FOR INFORMATION NOT ADDRESSED IN THIS CCO REMAIN IN FORCE

MARK	DATE	DESCRIPTIONS	BY	CH'D	CCO#
4	01/25/11	BIKEPATH STUD ISSUE	TH	CC	186
3	08/20/10	BIKEPATH DETAILS	TH	CC	99
2	07/07/08	CAULKING	AS	TH	66
1	07/20/07	BIKEPATH BRACKETS	GB	TH	33

REVISIONS

R. Valizadeh/V. Toan/Y.L./W.L./F.C.
DESIGN OVERSIGHT
SIGN OFF DATE 01/25/11

Rev. Date: 5-18-98

DESIGN	BY T. Ho	CHECKED T. McMeans	
DETAILS	BY R. Xu	CHECKED P. Ritchie	
QUANTITIES	BY C. Bernardo	CHECKED S. Shi	

PREPARED FOR THE STATE OF CALIFORNIA DEPARTMENT OF TRANSPORTATION

ALL DIMENSIONS ARE IN MILLIMETERS UNLESS OTHERWISE SHOWN

R. Manzanarez
PROJECT ENGINEER

BRIDGE NO. 34-0006L/R
KILOMETER POST 13.2/13.9

SAN FRANCISCO OAKLAND BAY BRIDGE
EAST SPAN SEISMIC SAFETY PROJECT
SELF-ANCHORED SUSPENSION BRIDGE
(SUPERSTRUCTURE & TOWER)

BIKEPATH DETAILS NO. 9

ORIGINAL SCALE IN MILLIMETERS FOR REDUCED PLANS 0 10 20 30 40 50 60 70 80 90 100

CU 04
EA 0120F1

DISREGARD PRINTS BEARING EARLIER REVISION DATES

REVISION DATES (PRELIMINARY STAGE ONLY) 05/31/01 04/08/02 07/01/02 12/18/02 11/13/05

SHEET 416R4 OF

FILE => I:\bb\04-012001\sas\contract plans and cco\cco\cco#186\1-original 01-25-11\dgn\agbwd09.dgn

USERNAME => DWinrow DATE PLOTTED => 25 JAN 2011 TIME PLOTTED => 14:22:03

100% PS&E

DIST.	COUNTY	ROUTE	KILOMETER POST TOTAL PROJECT	SHEET NO.	TOTAL SHEETS
04	SF	80	13.2/13.9	834R5	1204

REGISTERED ENGINEER - CIVIL

12-6-04
PLANS APPROVAL DATE

PROFESSIONAL ENGINEER — Tien Hung Ho, No. C 43990, Exp. 6/30/11, CIVIL, STATE OF CALIFORNIA

The State of California or its officers or agents shall not be responsible for the accuracy or completeness of electronic copies of this plan sheet.

T.Y. LIN / MOFFATT & NICHOL
825 BATTERY STREET
SAN FRANCISCO, CA 94111

Caltrans now has a web site! To get to the web site, go to: http://www.dot.ca.gov

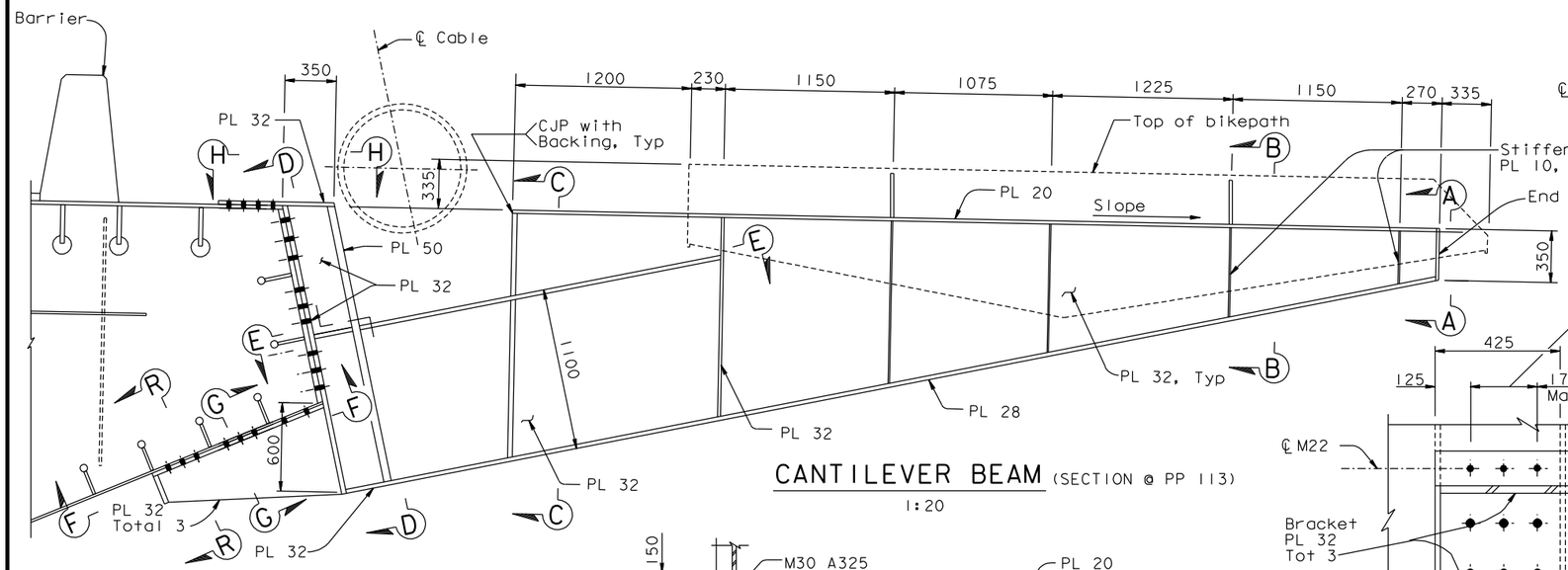

CANTILEVER BEAM (SECTION @ PP 113)
1:20

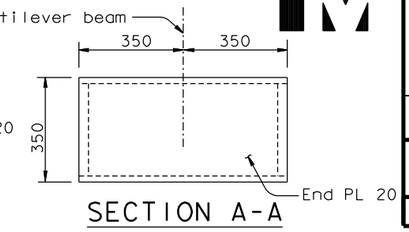

SECTION A-A
1:10

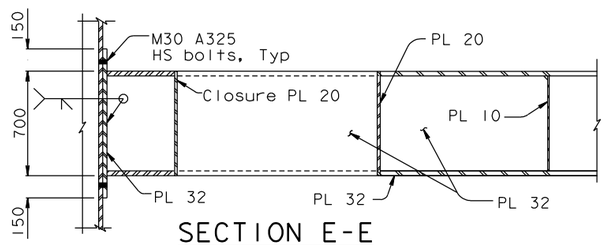

SECTION E-E
1:20

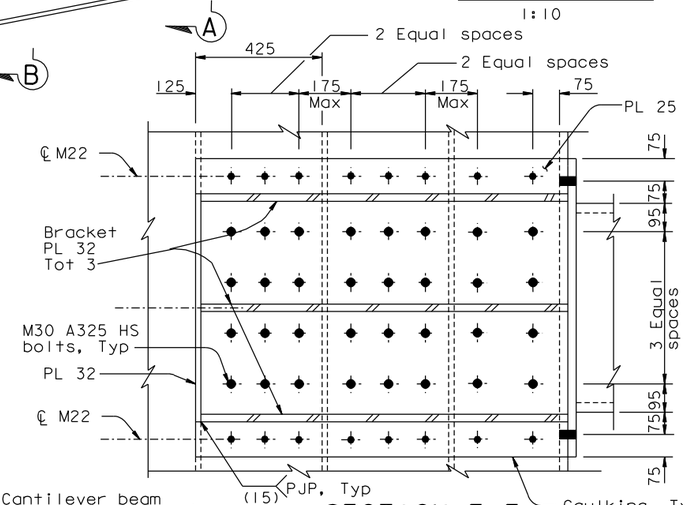

SECTION F-F
1:10

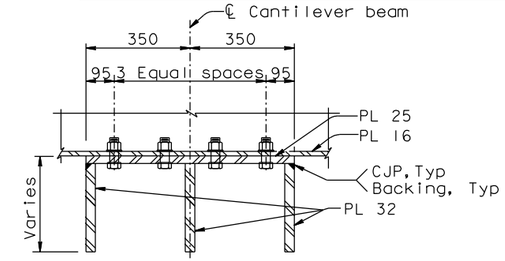

SECTION G-G
1:10

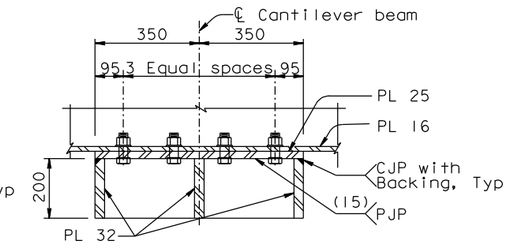

SECTION R-R
1:10

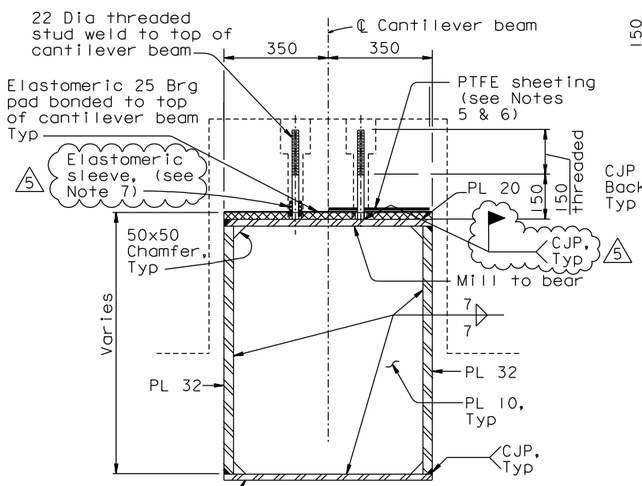

SECTION B-B
1:10

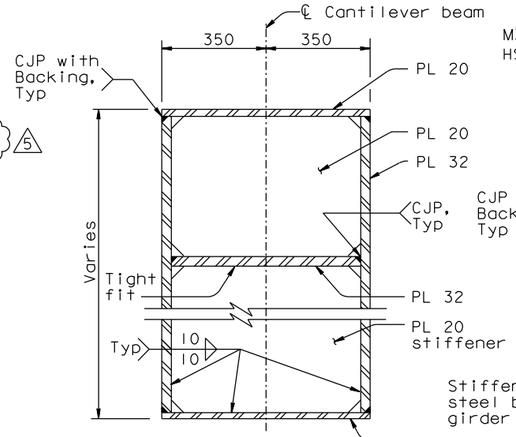

SECTION C-C
1:10

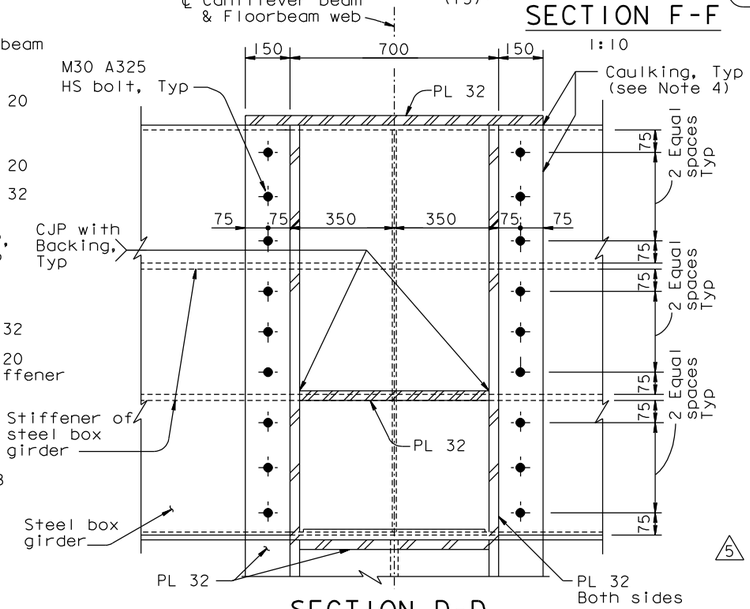

SECTION D-D
1:10

ALL DIMENSIONS ARE IN MILLIMETERS UNLESS OTHERWISE SHOWN

NOTES:

1. The cable location shown is based on the information provided in "Suspension Cable Layout" sheets. The Contractor shall verify these locations based on the "as built" cable profile described in "Construction Sequence" sheets. In the event of a conflict, bikepath bracket details may be revised and submitted to the Engineer for review and approval.
2. Bikepath deck similar to typical bikepath deck, for details, see "Bikepath Details No.3" sheets.
3. For Section H-H, see Section F-F of "Bikepath Details No.11" sheet.
4. Caulking shall be provided along all edges of bolted connection between bikepath cantilever beam and box girder.
5. For PTFE sheeting see similar Section A-A on "Bikepath Details No.4" sheet.
6. For limits of PTFE see also "Elastomeric Bearing Pad" on "Bikepath Details No.4" sheet.
7. For elastomeric sleeve detail, see "Bikepath Details No.4A" sheet. (5)

CONTRACT CHANGE ORDER NO. ____
SHEET ____ OF ____

REQUESTS FOR INFORMATION NOT ADDRESSED IN THIS CCO REMAIN IN FORCE

MARK	DATE	DESCRIPTIONS	BY	CH'D	CCO#
5	01/25/11	BIKEPATH STUD ISSUE	TH	CC	186
4	08/20/10	BIKEPATH DETAILS	TH	CC	99
3	12/23/08	BIKEPATH DETAILS	TH	MN	99
2	07/07/08	CAULKING	AS	TH	66
1	07/20/07	BIKEPATH BRACKETS	GB	TH	33

REVISIONS

R. Valizadeh/V. Toan/Y.L./W.L./F.C.
DESIGN OVERSIGHT
SIGN OFF DATE 01/25/11

	BY	CHECKED
DESIGN	T. Ho	T. McMeans
DETAILS	R. Xu	P. Ritchie
QUANTITIES	C. Bernardo	S. Shi

PREPARED FOR THE STATE OF CALIFORNIA DEPARTMENT OF TRANSPORTATION

R. Manzanarez
PROJECT ENGINEER

BRIDGE NO. 34-0006L/R
KILOMETER POST 13.2/13.9

SAN FRANCISCO OAKLAND BAY BRIDGE
EAST SPAN SEISMIC SAFETY PROJECT
SELF-ANCHORED SUSPENSION BRIDGE
(SUPERSTRUCTURE & TOWER)

BIKEPATH DETAILS NO. 10

Rev. Date: 5-18-98

ORIGINAL SCALE IN MILLIMETERS FOR REDUCED PLANS 0 10 20 30 40 50 60 70 80 90 100

CU 04
EA 0120F1

DISREGARD PRINTS BEARING EARLIER REVISION DATES

REVISION DATES (PRELIMINARY STAGE ONLY) 05/31/01 04/08/02 07/01/02 12/19/02

SHEET 417R5 OF

FILE => I:\bb\04-012001\sas\contract plans and cco\cco\cco#186\1-original 01-25-11\dgn\agbwd10.dgn

USERNAME => DWinrow DATE PLOTTED => 25 JAN 2011 TIME PLOTTED => 14:22:52

100% PS&E

DIST.	COUNTY	ROUTE	KILOMETER POST TOTAL PROJECT	SHEET NO.	TOTAL SHEETS
04	SF	80	13.2/13.9	835R4	1204

Caltrans Metric

REGISTERED ENGINEER - CIVIL

12-6-04

PLANS APPROVAL DATE

REGISTERED PROFESSIONAL ENGINEER Tien Hung Ho No. C 43990 Exp. 6/30/11 CIVIL STATE OF CALIFORNIA

The State of California or its officers or agents shall not be responsible for the accuracy or completeness of electronic copies of this plan sheet.

T.Y. LIN / MOFFATT & NICHOL
825 BATTERY STREET
SAN FRANCISCO, CA 94111

Caltrans now has a web site! To get to the web site, go to: http://www.dot.ca.gov

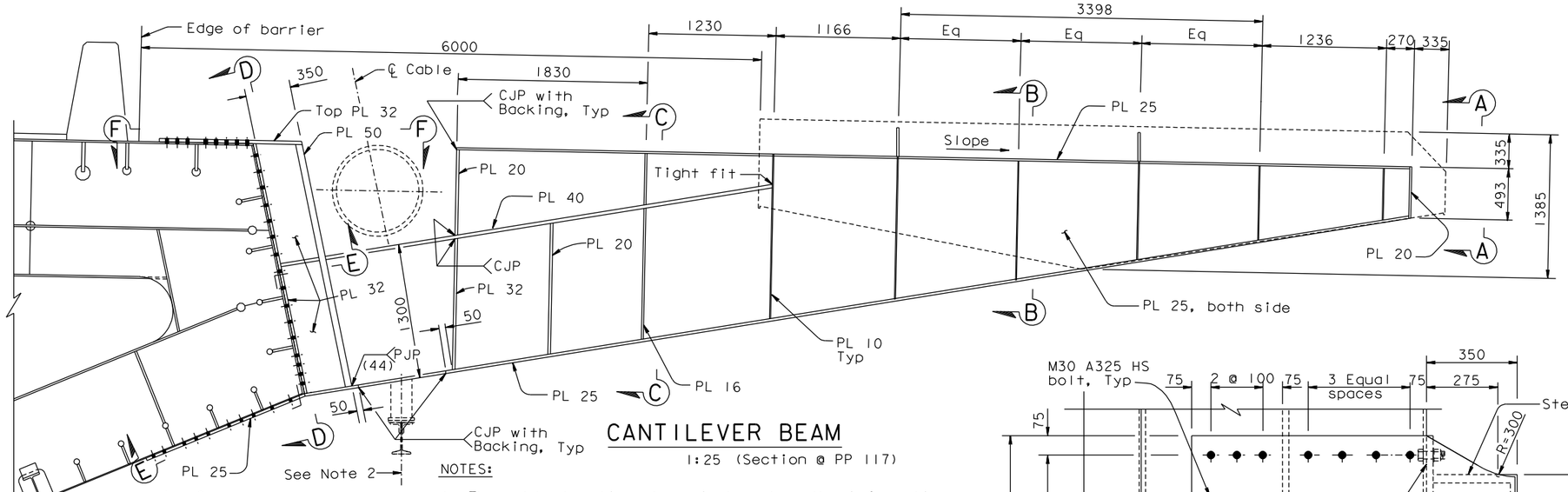

CANTILEVER BEAM

1:25 (Section @ PP 117)

NOTES:

1. The cable location shown is based on the information provided in "Suspension Cable Layout" sheets. The Contractor shall verify these locations based on the "as built" cable profile described in "Construction Sequence" sheets. In the event of a conflict, bikepath bracket details may be revised and submitted to the Engineer for review and approval.
2. For location and details of traveler rail support, see "Traveler Rail Details No.13" sheet.
3. Caulking shall be provided along all edges of bolted connection between bikepath cantilever beam and box girder.
4. For elastomeric sleeve detail, see "Bikepath Details No.4A" sheet.

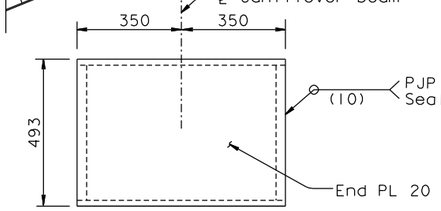

VIEW A-A

1:10

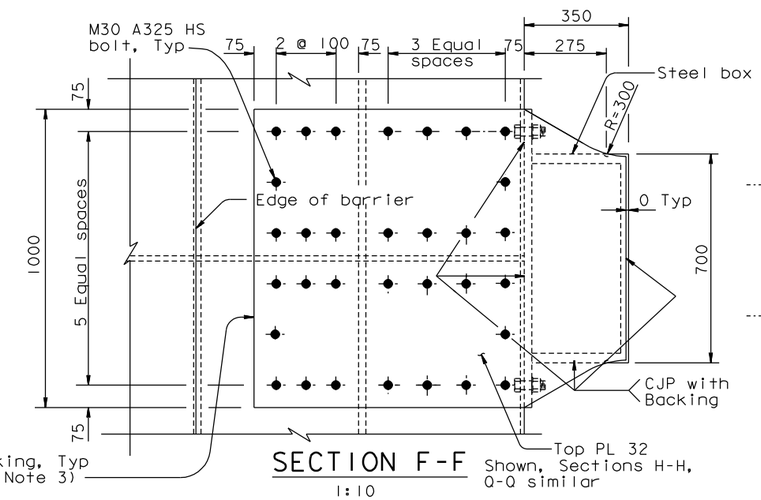

SECTION F-F

1:10

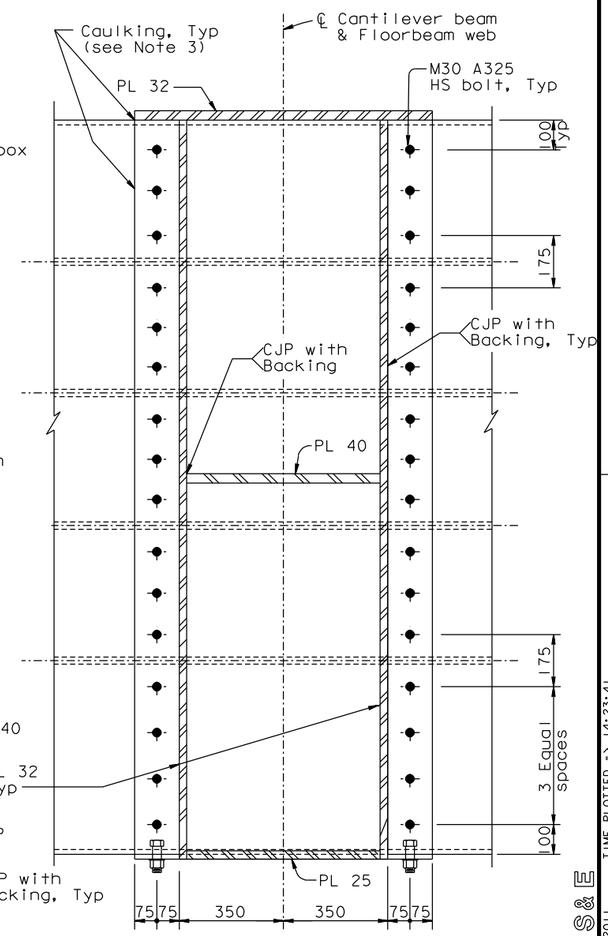

SECTION D-D

1:10

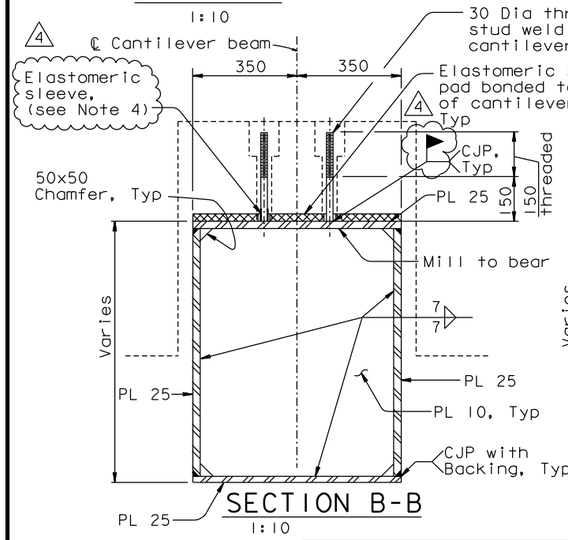

SECTION B-B

1:10

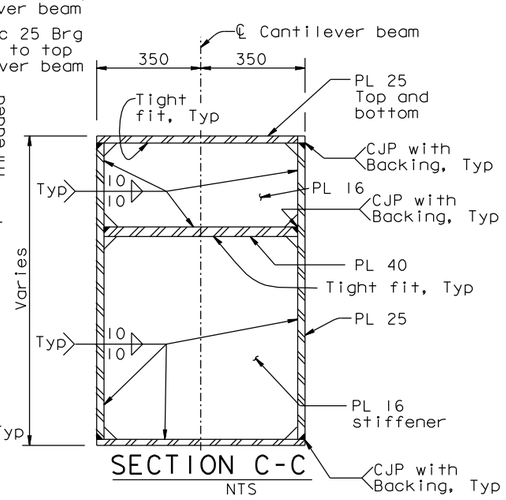

SECTION C-C

NTS

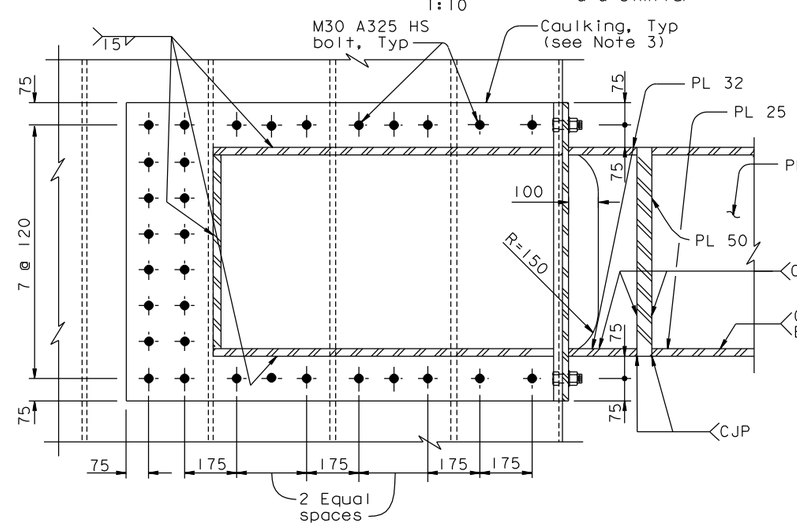

SECTION E-E

1:10

REQUESTS FOR INFORMATION NOT ADDRESSED IN THIS CCO REMAIN IN FORCE

MARK	DATE	DESCRIPTIONS	BY	CH'D	CCO#
4	01/25/11	BIKEPATH STUD ISSUE	TH	CC	186
3	08/20/10	BIKEPATH DETAILS	TH	CC	99
2	07/07/08	CAULKING	AS	TH	66
1	07/20/07	BIKEPATH BRACKETS	GB	TH	33

REVISIONS

CONTRACT CHANGE ORDER NO. ____
SHEET ____ OF ____

R. Valizadeh/V. Toan/Y.L./W.L./F.C.
DESIGN OVERSIGHT
SIGN OFF DATE 01/25/11

Rev. Date: 5-18-98

	BY	CHECKED
DESIGN	T. Ho	T. McMeans
DETAILS	R. Xu	P. Ritchie
QUANTITIES	C. Bernardo	S. Shi

PREPARED FOR THE STATE OF CALIFORNIA DEPARTMENT OF TRANSPORTATION

ORIGINAL SCALE IN MILLIMETERS FOR REDUCED PLANS 0 10 20 30 40 50 60 70 80 90 100

ALL DIMENSIONS ARE IN MILLIMETERS UNLESS OTHERWISE SHOWN

R. Manzanarez
PROJECT ENGINEER

BRIDGE NO. 34-0006L/R
KILOMETER POST 13.2/13.9

CU 04
EA 0120F1

DISREGARD PRINTS BEARING EARLIER REVISION DATES

REVISION DATES (PRELIMINARY STAGE ONLY) 05/24/01 04/08/02 07/01/02 12/19/02 11/13/05

SAN FRANCISCO OAKLAND BAY BRIDGE
EAST SPAN SEISMIC SAFETY PROJECT
SELF-ANCHORED SUSPENSION BRIDGE
(SUPERSTRUCTURE & TOWER)

BIKEPATH DETAILS NO. 11

SHEET 418R4 OF

FILE => I:\bb\04-012001\sas\contract plans and cco\cco\cco#186\1-original 01-25-11\dgn\agbwd11.dgn

USERNAME => DWinrow DATE PLOTTED => 25 JAN 2011 TIME PLOTTED => 14:23:41

100 % PS&E

DIST.	COUNTY	ROUTE	KILOMETER POST TOTAL PROJECT	SHEET NO.	TOTAL SHEETS
04	SF	80	13.2/13.9	836R5	1204

REGISTERED ENGINEER - CIVIL

12-6-04
PLANS APPROVAL DATE

REGISTERED PROFESSIONAL ENGINEER Tien Hung Ho No. C 43990 Exp. 06/30/11 CIVIL STATE OF CALIFORNIA

The State of California or its officers or agents shall not be responsible for the accuracy or completeness of electronic copies of this plan sheet.

T.Y. LIN / MOFFATT & NICHOL
825 BATTERY STREET
SAN FRANCISCO, CA 94111

Caltrans now has a web site! To get to the web site, go to: http://www.dot.ca.gov

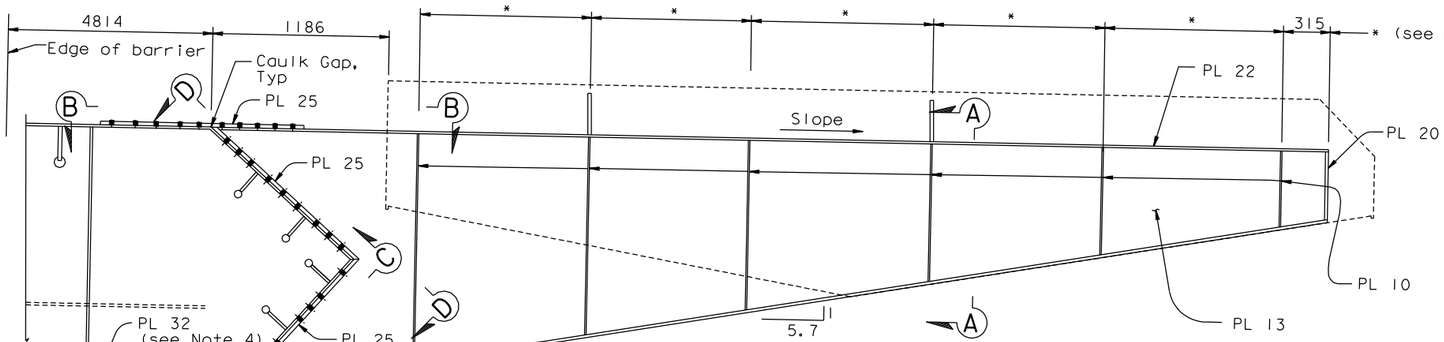

CANTILEVER BEAM (PP 121)
1:20

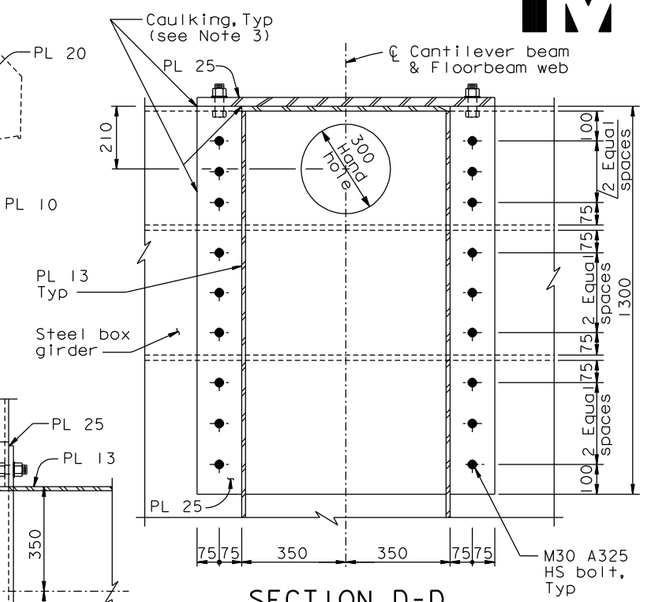

SECTION D-D
1:10

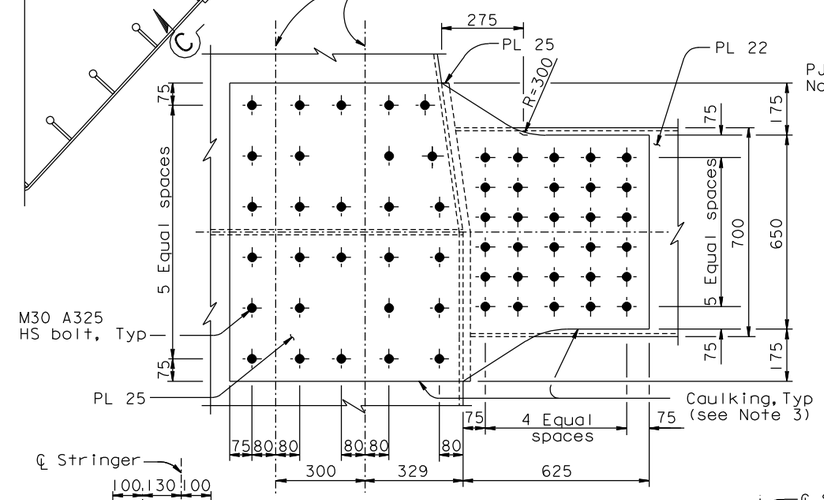

VIEW B-B
1:10

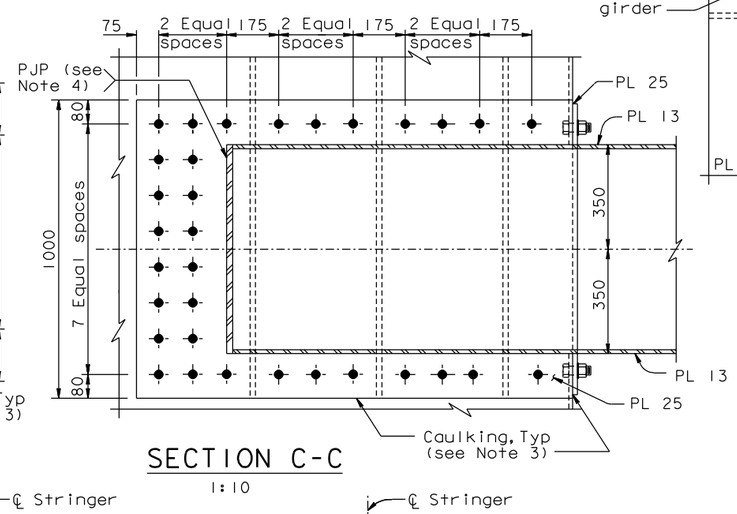

SECTION C-C
1:10

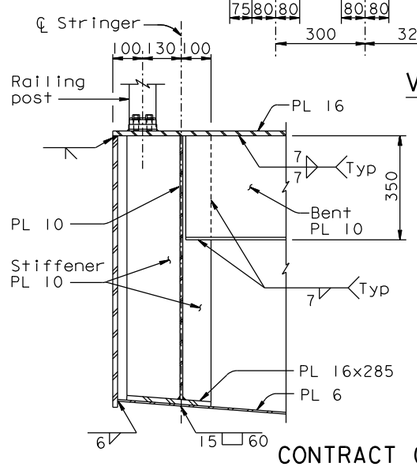

DETAIL E
1:10

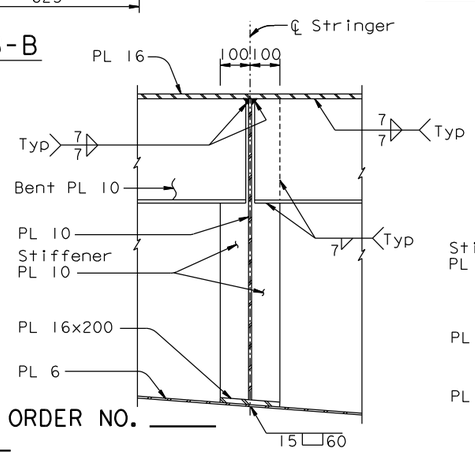

DETAIL F
1:10

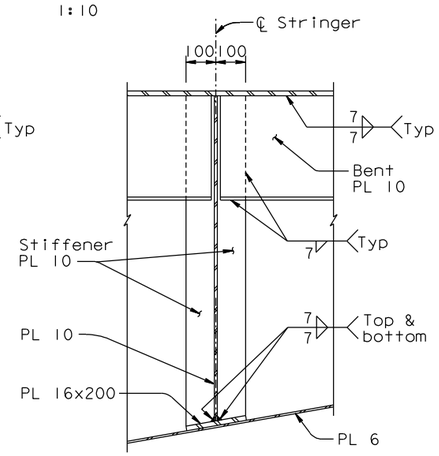

DETAIL G
1:10

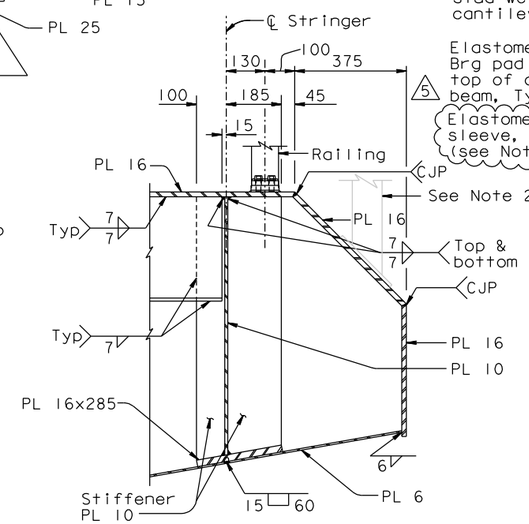

DETAIL H
1:10

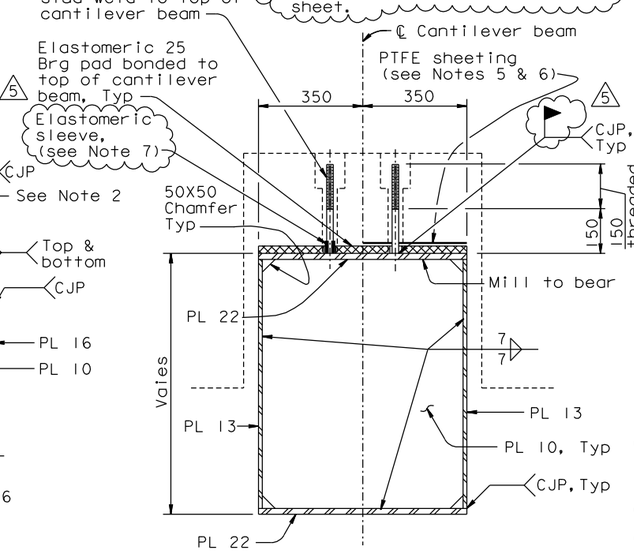

SECTION A-A
1:10

NOTES:

1. Stiffener plate spacing to match bikepath stringer spacing, see "Bikepath Framing Details No.5" sheet.
2. For call box support locations and details, see "Road Plans".
3. Caulking shall be provided along all edges of bolted connection between bikepath cantilever beam and box girder.
4. For bikepath bracket stiffener, see Note 6 on "Floorbeam At East Transition No.4" sheet.
5. PTFE sheeting, see similar Section A-A on "Bikepath Details No.1" and "Bikepath Details No.4" sheets.
6. For limits of PTFE, see also "Elastomeric Bearing Pad" on "Bikepath Details No.4" sheet.
7. For elastomeric sleeve detail, see "Bikepath Details No.4A" sheet. (5)

CONTRACT CHANGE ORDER NO. ____
SHEET ____ OF ____

REQUESTS FOR INFORMATION NOT ADDRESSED IN THIS CCO REMAIN IN FORCE

MARK	DATE	DESCRIPTIONS	BY	CH'D	CCO#
5	01/25/11	BIKEPATH STUD ISSUE	TH	CC	186
4	09/24/10	BIKEPATH DETAILS	TH	CC	99
3	08/20/10	BIKEPATH DETAILS	TH	CC	99
2	07/07/08	CAULKING	AS	TH	66
1	07/20/07	BIKEPATH BRACKETS	GB	TH	33

REVISIONS

ALL DIMENSIONS ARE IN MILLIMETERS UNLESS OTHERWISE SHOWN

R. Valizadeh/V. Toan/Y.L./W.L./F.C.
DESIGN OVERSIGHT
SIGN OFF DATE 01/25/11

DESIGN	BY T. Ho	CHECKED T. McMeans	
DETAILS	BY R. Xu	CHECKED P. Ritchie	
QUANTITIES	BY C. Bernardo	CHECKED S. Shi	

PREPARED FOR THE STATE OF CALIFORNIA DEPARTMENT OF TRANSPORTATION

R. Manzanarez
PROJECT ENGINEER

BRIDGE NO. 34-0006L/R
KILOMETER POST 13.2/13.9

SAN FRANCISCO OAKLAND BAY BRIDGE
EAST SPAN SEISMIC SAFETY PROJECT
SELF-ANCHORED SUSPENSION BRIDGE
(SUPERSTRUCTURE & TOWER)

BIKEPATH DETAILS NO. 12

Rev. Date: 5-18-98

ORIGINAL SCALE IN MILLIMETERS FOR REDUCED PLANS 0 10 20 30 40 50 60 70 80 90 100

CU 04
EA 0120F1

DISREGARD PRINTS BEARING EARLIER REVISION DATES

REVISION DATES (PRELIMINARY STAGE ONLY) 05/31/01 04/08/02 07/01/02 12/18/02 11/13/05

SHEET 419R5 OF

FILE => I:\bb\04-0120F1\sas\contract plans and cco\cco\cco#186\1-original 01-25-11\dgn\agbwd12.dgn

USERNAME => DWinrow DATE PLOTTED => 25 JAN 2011 TIME PLOTTED => 14:26:07

100% PS&E

DIST.	COUNTY	ROUTE	KILOMETER POST TOTAL PROJECT	SHEET NO.	TOTAL SHEETS
04	SF	80	13.2/13.9	838R5	1204

Caltrans Metric

REGISTERED ENGINEER - CIVIL

12-6-04

PLANS APPROVAL DATE

REGISTERED PROFESSIONAL ENGINEER Tien Hung Ho No. C 43990 Exp. 6/30/11 CIVIL STATE OF CALIFORNIA

The State of California or its officers or agents shall not be responsible for the accuracy or completeness of electronic copies of this plan sheet.

T.Y. LIN / MOFFATT & NICHOL
825 BATTERY STREET
SAN FRANCISCO, CA 94111

Caltrans now has a web site! To get to the web site, go to: http://www.dot.ca.gov

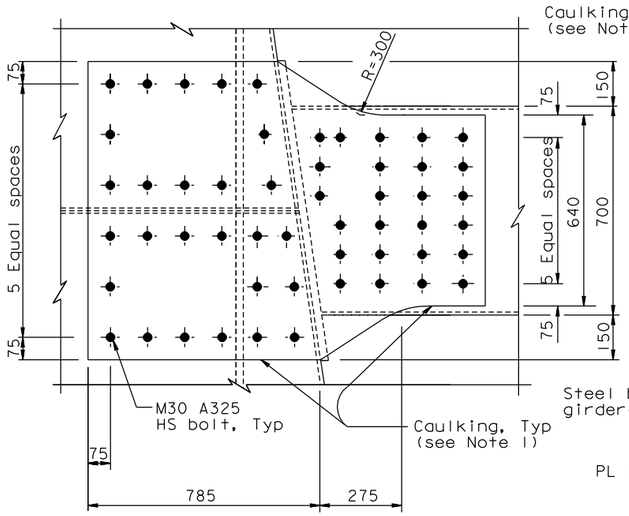

VIEW J-J
1:10

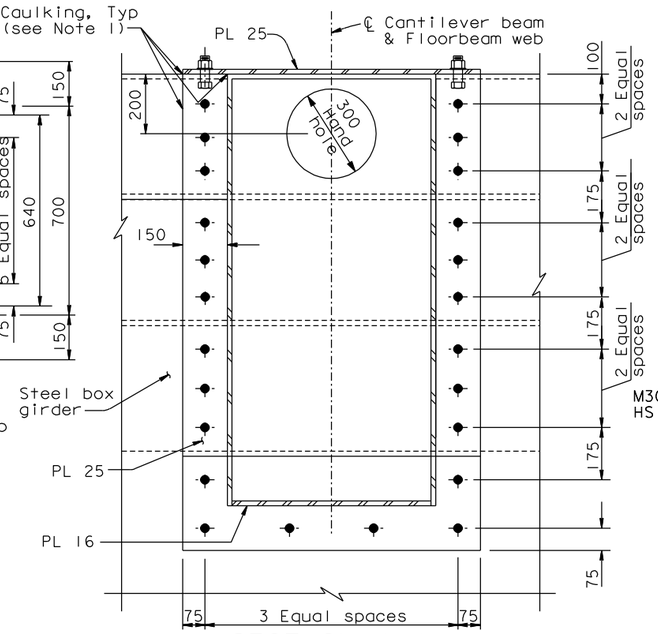

SECTION K-K
1:10

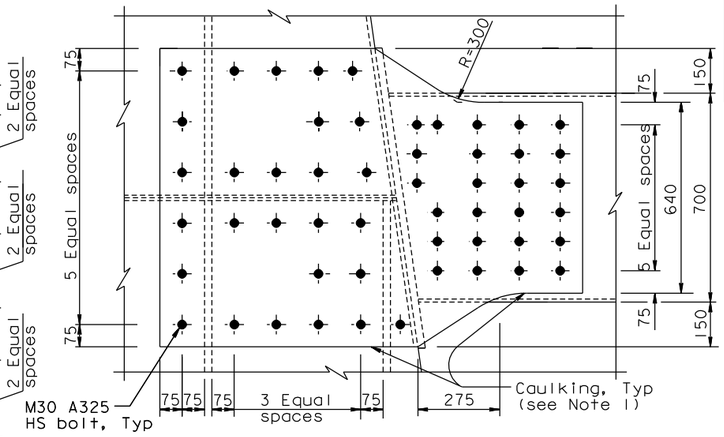

VIEW L-L
1:10

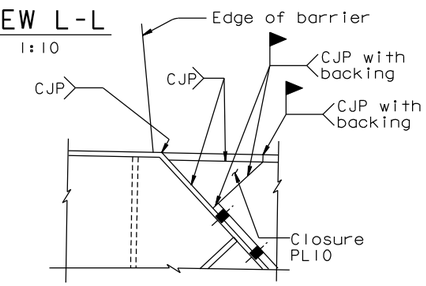

DETAIL A
1:5

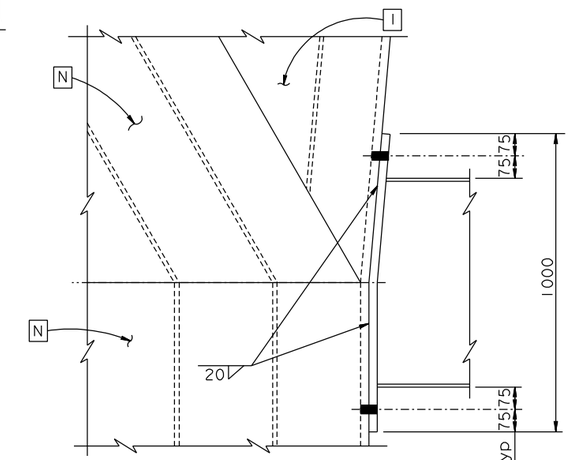

SECTION P-P
1:10

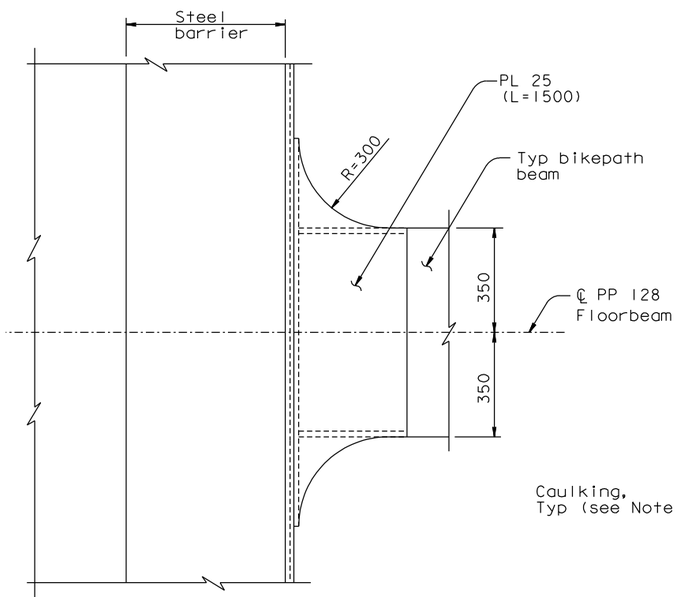

VIEW M-M
1:10

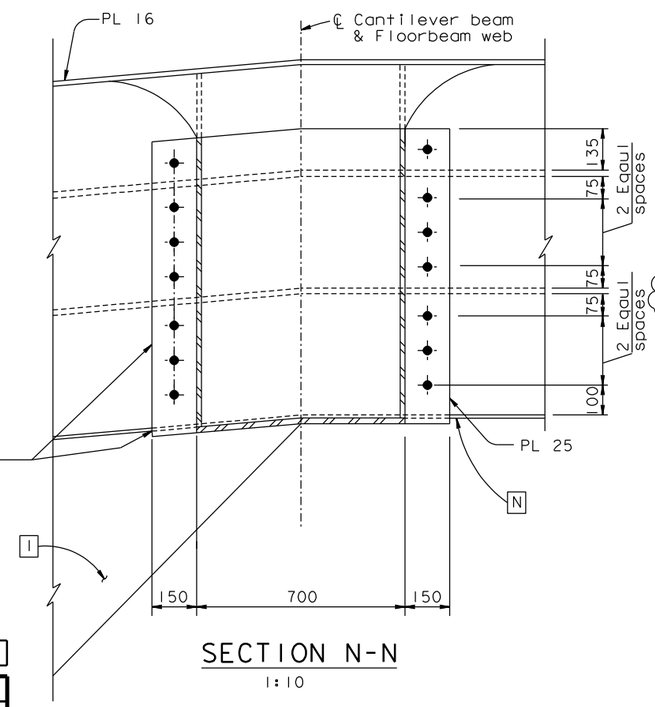

SECTION N-N
1:10

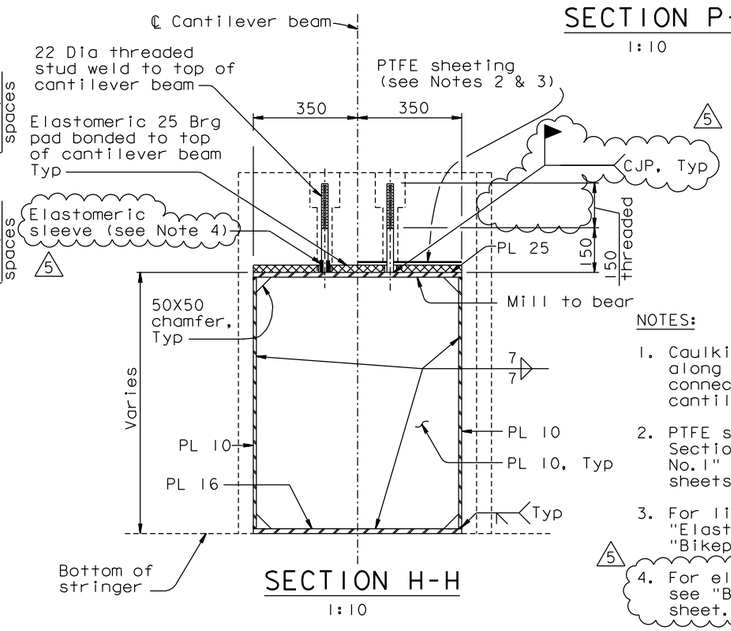

SECTION H-H
1:10

NOTES:

1. Caulking shall be provided along all edges of bolted connection between bikepath cantilever beam and box girder.
2. PTFE sheeting, see similar Section A-A on "Bikepath Details No. 1" and "Bikepath Details No. 4" sheets.
3. For limits of PTFE, see also "Elastomeric Bearing Pad" on "Bikepath Details No. 4" sheet.
4. For elastomeric sleeve detail, see "Bikepath Details No. 4A" sheet.

ALL DIMENSIONS ARE IN MILLIMETERS UNLESS OTHERWISE SHOWN

CONTRACT CHANGE ORDER NO. ____
SHEET ____ OF ____

REQUESTS FOR INFORMATION NOT ADDRESSED IN THIS CCO REMAIN IN FORCE

MARK	DATE	DESCRIPTIONS	BY	CH'D	CCO#
5	01/25/11	BIKEPATH STUD ISSUE	TH	CC	186
4	08/20/10	BIKEPATH DETAILS	TH	CC	99
3	09/25/09	BIKEPATH DETAILS	TH	HT	99
2	07/07/08	CAULKING	AS	TH	66
1	07/20/07	BIKEPATH BRACKETS	GB	TH	33

REVISIONS

R. Valizadeh/V. Toan/Y.L./W.L./F.C.
DESIGN OVERSIGHT
SIGN OFF DATE 01/29/11

DESIGN	BY T. Ho	CHECKED T. McMeans	
DETAILS	BY R. Xu	CHECKED P. Ritchie	
QUANTITIES	BY C. Bernardo	CHECKED S. Shi	

PREPARED FOR THE STATE OF CALIFORNIA DEPARTMENT OF TRANSPORTATION

R. Manzanarez
PROJECT ENGINEER

BRIDGE NO. 34-0006L/R
KILOMETER POST 13.2/13.9

SAN FRANCISCO OAKLAND BAY BRIDGE
EAST SPAN SEISMIC SAFETY PROJECT
SELF-ANCHORED SUSPENSION BRIDGE (SUPERSTRUCTURE & TOWER)

BIKEPATH DETAILS NO. 14

Rev. Date: 5-18-98

ORIGINAL SCALE IN MILLIMETERS FOR REDUCED PLANS 0 10 20 30 40 50 60 70 80 90 100

CU 04
EA 0120F1

DISREGARD PRINTS BEARING EARLIER REVISION DATES

REVISION DATES (PRELIMINARY STAGE ONLY) 05/31/01 04/08/02 07/04/02 12/18/02 11/13/05

SHEET 421R5 OF

FILE => I:\bb\04-012001\sas\contract plans and cco\cco\cco#186\1-original 01-25-11\dgn\agbwd14.dgn

USERNAME => DWinrow DATE PLOTTED => 25 JAN 2011 TIME PLOTTED => 14:29:22

100% PS&E

DIST.	COUNTY	ROUTE	KILOMETER POST TOTAL PROJECT	SHEET NO.	TOTAL SHEETS
04	SF	80	13.2/13.9	840SIRI	1204

REGISTERED ENGINEER - CIVIL

08-20-10

PLANS APPROVAL DATE

The State of California or its officers or agents shall not be responsible for the accuracy or completeness of electronic copies of this plan sheet.

REGISTERED PROFESSIONAL ENGINEER Marwan N. Nader No. C 054426 Exp. 12/31/11 CIVIL STATE OF CALIFORNIA

T.Y. LIN / MOFFATT & NICHOL
825 BATTERY STREET
SAN FRANCISCO, CA 94111

Caltrans now has a web site! To get to the web site, go to: http://www.dot.ca.gov

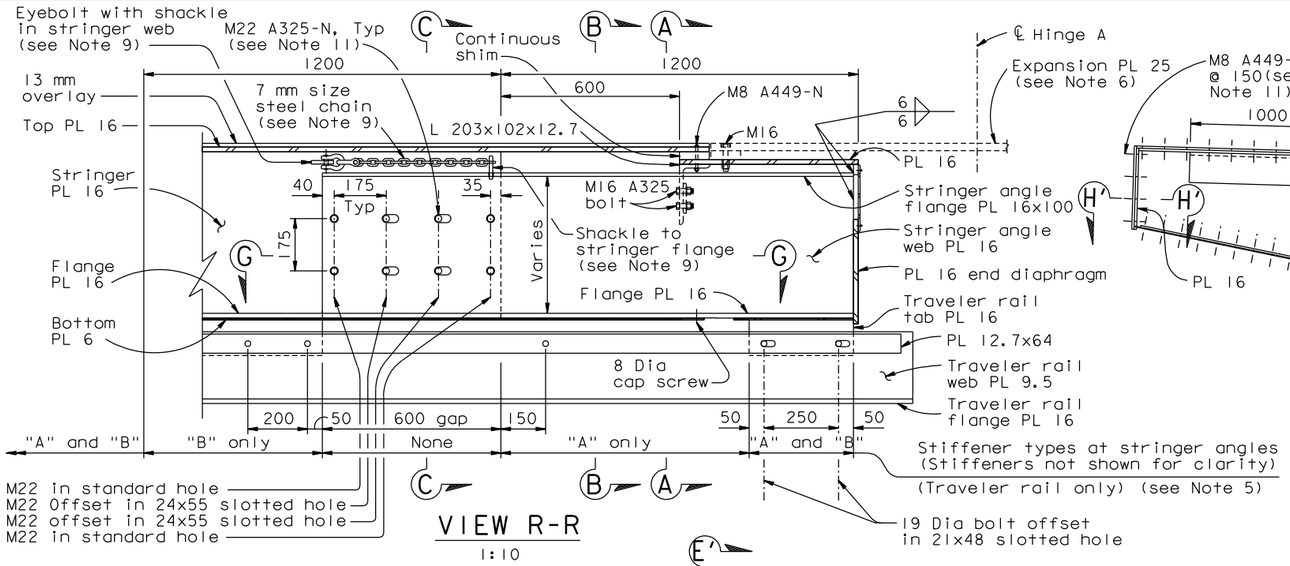

VIEW R-R
1:10

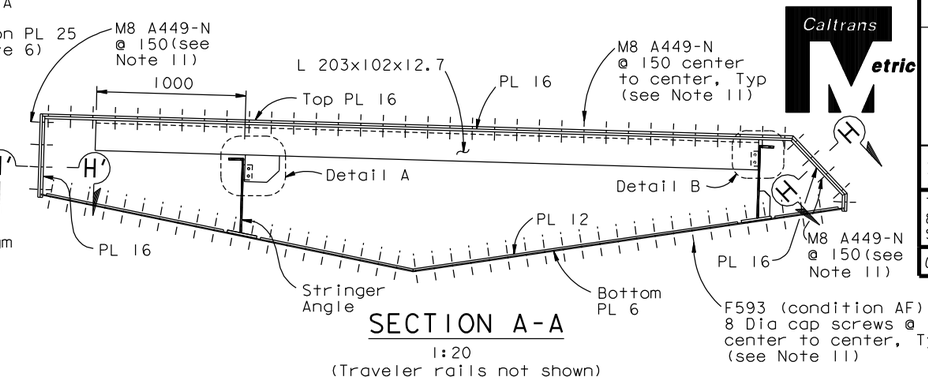

SECTION A-A
1:20
(Traveler rails not shown)

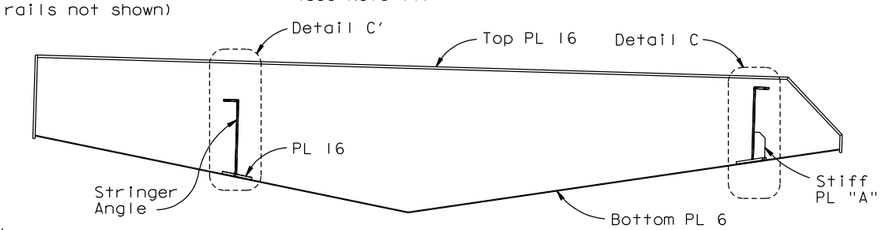

SECTION B-B
1:20
(Traveler rails not shown)

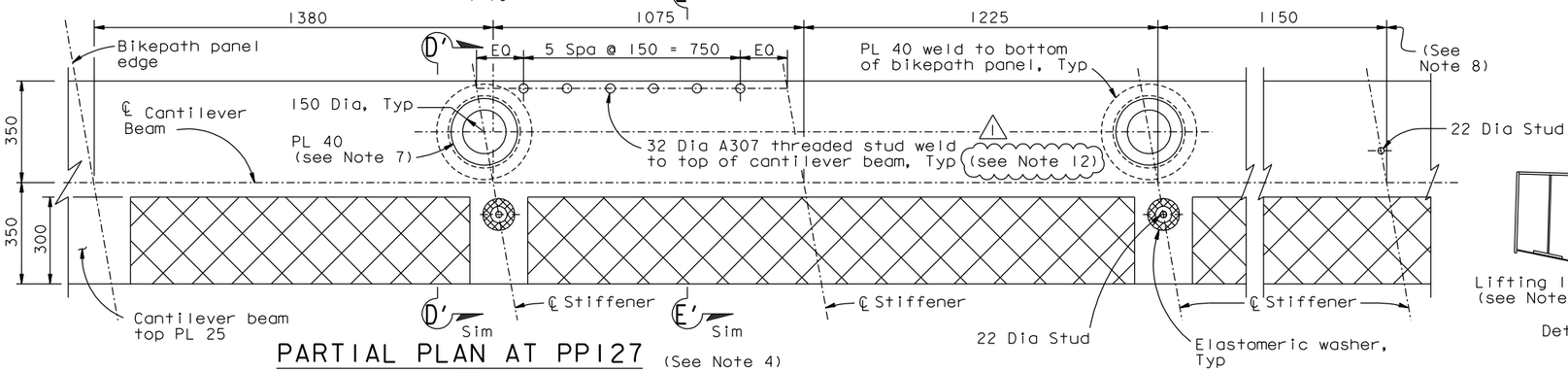

PARTIAL PLAN AT PP127 (See Note 4)
1:20

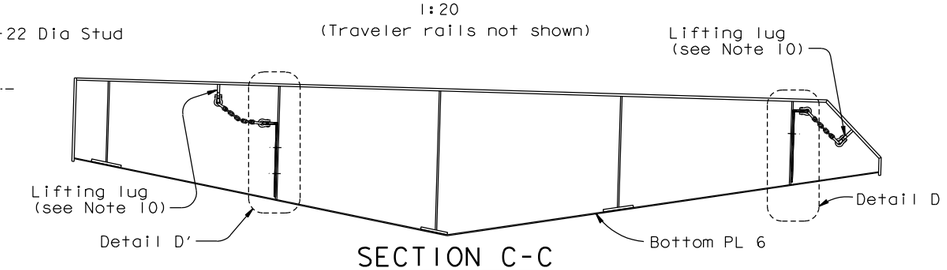

SECTION C-C
1:20
(Traveler rails not shown)

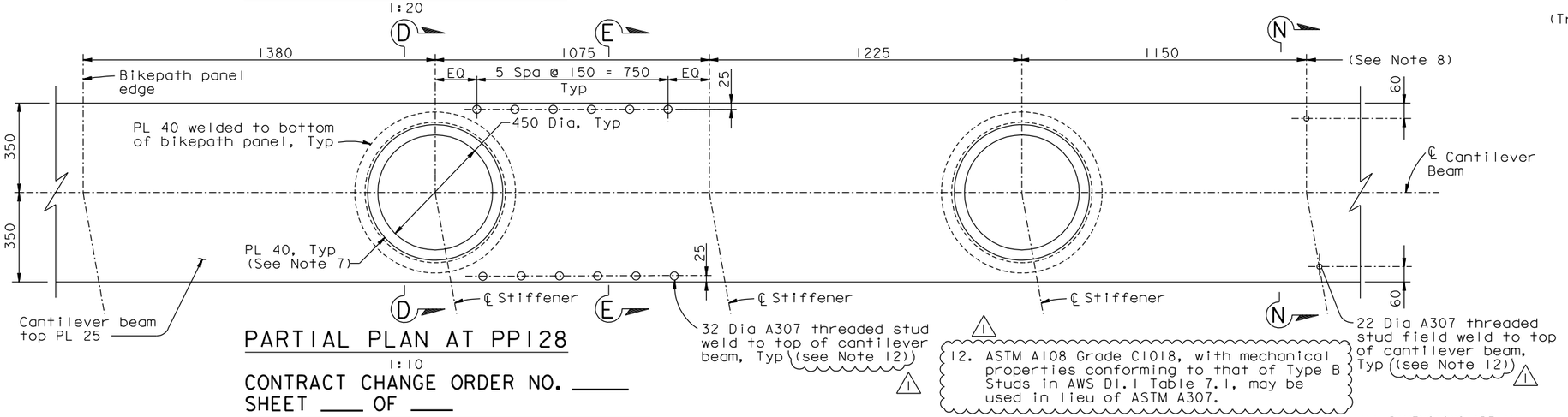

PARTIAL PLAN AT PP128
1:10

12. ASTM A108 Grade C1018, with mechanical properties conforming to that of Type B Studs in AWS D1.1 Table 7.1, may be used in lieu of ASTM A307.

NOTES:

1. For informatin not shown, see "Bikepath Details No.1" through "Bikepath Details No.4", "Bikepath Details No.13" and "E2/E3 Bikepath Traveler Rails" sheets.
2. For Sections D-D & E-E, see "Bikepath Details No.18" sheet.
3. For Sections F-F, G-G, H-H & N-N and Details A, B, C & D, see "Bikepath Details No.19" sheet.
4. Provide tie down studs per " Bikepath Details No.4" sheet.
5. For stringer angle stiffeners at traveler rails see "Bikepath Details No.19" sheet.
6. For Details not shown, see "Bikepath Details No.15" and "Bikepath Details No.15A" sheets.
7. 3 mm HDPE epoxy bonded to top of PL 40.
8. Stiffener plate spacing are shown for information only. Stiffener plate spacing to match bikepath stringer spacing.
9. Eyebolts, shackles and chains shall be hot-dipped galvanized and have a working load capacity of 16 kN.
10. For lifting lug details, see "Tower Access Details No.9" sheet.
11. Bolts shall be installed with threads included in the shear plane.

CONTRACT CHANGE ORDER NO. _____
SHEET ____ OF ____

REQUESTS FOR INFORMATION NOT ADDRESSED IN THIS CCO REMAIN IN FORCE

ALL DIMENSIONS ARE IN MILLIMETERS UNLESS OTHERWISE SHOWN

R. Valizadeh/V. Toan/Y.L./W.L./F.C.
DESIGN OVERSIGHT
Roya Valizadeh / Vong Toan / Y. Liu
SIGN OFF DATE 02/04/11

MARK	DATE	DESCRIPTIONS	BY	CH'D	CCO#
1	02/04/11	BIKEPATH STUD ISSUE	CC	MN	186
0	08/20/10	BIKEPATH DETAILS	RB	MN	99

REVISIONS

	BY	CHECKED
DESIGN	G. Baker	M. Nader
DETAILS	R. Boundouki	M. Benoit
QUANTITIES	R. Boundouki	A. Baumberger

PREPARED FOR THE STATE OF CALIFORNIA DEPARTMENT OF TRANSPORTATION

R. Manzanarez
PROJECT ENGINEER

BRIDGE NO. 34-0006L/R
KILOMETER POST 13.2/13.9

SAN FRANCISCO OAKLAND BAY BRIDGE
EAST SPAN SEISMIC SAFETY PROJECT
SELF-ANCHORED SUSPENSION BRIDGE
(SUPERSTRUCTURE & TOWER)

BIKEPATH DETAILS NO. 17

Rev. Date: 5-18-98

ORIGINAL SCALE IN MILLIMETERS FOR REDUCED PLANS 0 10 20 30 40 50 60 70 80 90 100

CU 04
EA 0120F1

DISREGARD PRINTS BEARING EARLIER REVISION DATES

REVISION DATES (PRELIMINARY STAGE ONLY): 08/20/10

SHEET 423SIRI OF

FILE => I:\bb\04-012001\sas\contract plans and cco\cco\cco#186\2-revision 02-04-11\dgn\agbwd16a.dgn

USERNAME => arivera DATE PLOTTED => 03 FEB 2011 TIME PLOTTED => 11:22:57

100 % PS&E

DIST.	COUNTY	ROUTE	KILOMETER POST TOTAL PROJECT	SHEET NO.	TOTAL SHEETS
04	SF	80	13.2/13.9	840S2R1	1204

Caltrans Metric

REGISTERED ENGINEER - CIVIL

08-20-10

PLANS APPROVAL DATE

REGISTERED PROFESSIONAL ENGINEER Marwan N. Nader No. C 054426 Exp. 12/31/11 CIVIL STATE OF CALIFORNIA

The State of California or its officers or agents shall not be responsible for the accuracy or completeness of electronic copies of this plan sheet.

T.Y. LIN / MOFFATT & NICHOL
825 BATTERY STREET
SAN FRANCISCO, CA 94111

Caltrans now has a web site! To get to the web site, go to: http://www.dot.ca.gov

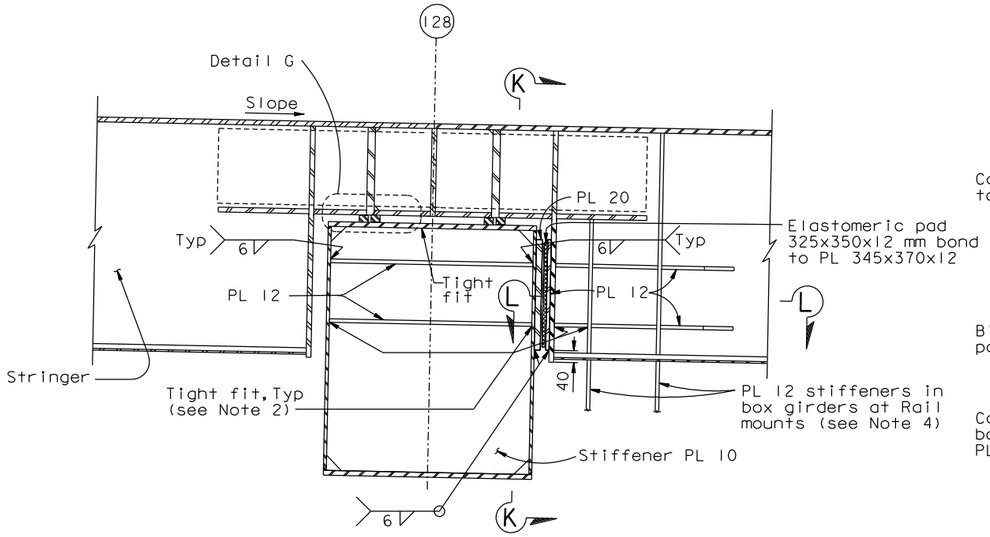

SECTION D-D (Section D'-D' similar)

1:10

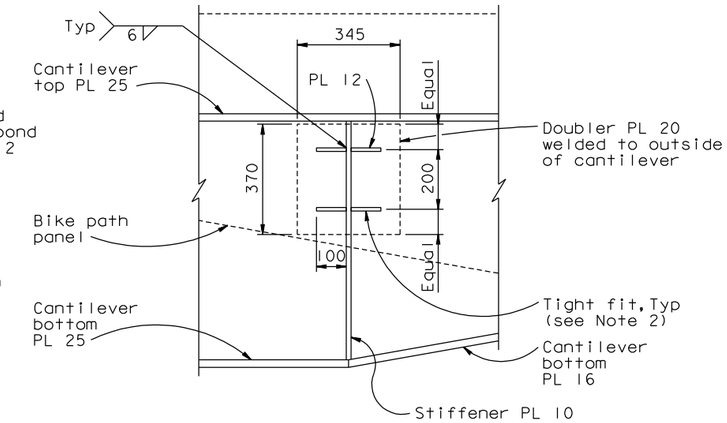

SECTION K-K

1:10

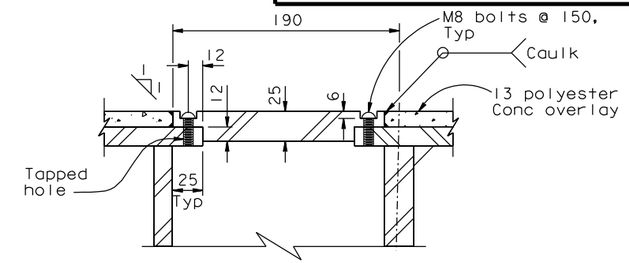

DETAIL F

1:2.5

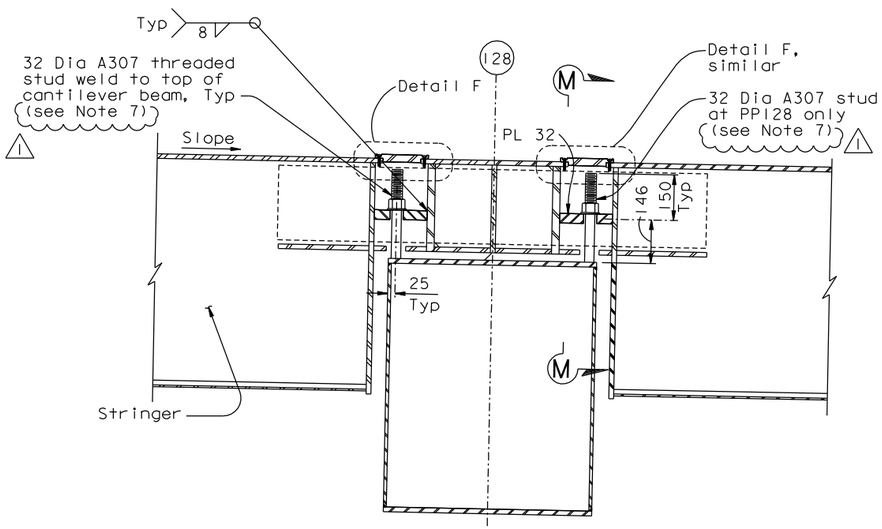

SECTION E-E (Section E'-E' similar)

1:10

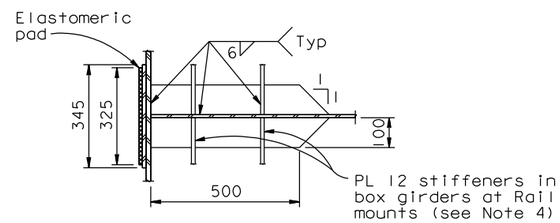

SECTION L-L

1:10

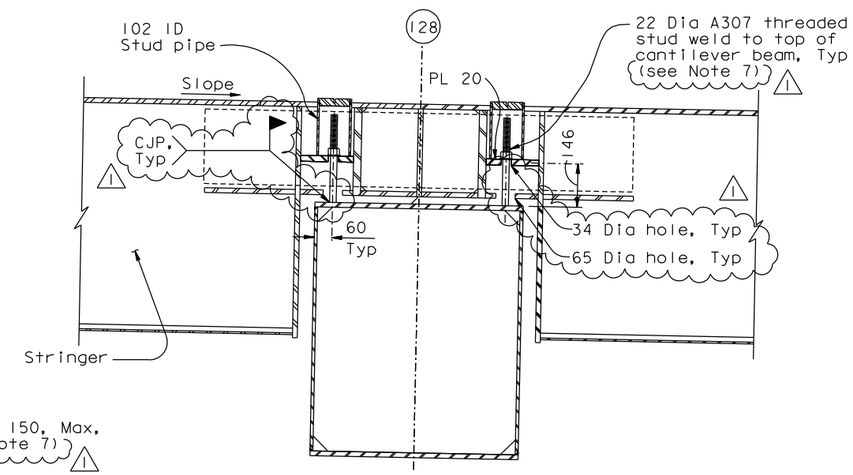

SECTION N-N (See Note 3)

1:10

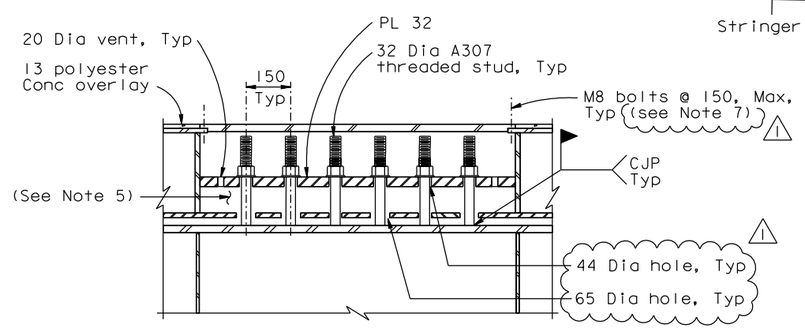

SECTION M-M

1:10

NOTES:

1. For information not shown, see "Bikepath Details No.1 through "Bikepath Details No.4", "Bikepath Details No.13" and "E2/E3 Bikepath Traveler Rails" sheets.
2. Plate shall be tight-fit prior to welding.
3. For Details not shown, see Section H-H on "Bikepath Details No.14" sheet.
4. For information not shown, see "E2/E3 Bikepath Traveler Rails-03" sheet.
5. After installation of bikepath panel, fill space with expandable polyurethane foam filler.
6. For Detail G, see "Bikepath Details No.19" sheet.
7. ASTM A108 Grade C1018, with mechanical properties conforming to that of Type B Studs in AWS D1.1 Table 7.1, may be used in lieu of ASTM A307.

CONTRACT CHANGE ORDER NO. ____
SHEET ____ OF ____

REQUESTS FOR INFORMATION NOT ADDRESSED IN THIS CCO REMAIN IN FORCE

ALL DIMENSIONS ARE IN MILLIMETERS UNLESS OTHERWISE SHOWN

R. Valizadeh/V. Toan/Y.L./W.L./F.C.
DESIGN OVERSIGHT
Roya Valizadeh / Vong Toan / Y. Liu
SIGN OFF DATE 02/04/11

MARK	DATE	DESCRIPTIONS	BY	CH'D	CCO#
1	02/04/11	BIKEPATH STUD ISSUE	CC	MN	186
0	08/20/10	BIKEPATH DETAILS	RB	MN	99

REVISIONS

DESIGN	BY G. Baker	CHECKED M. Nader	
DETAILS	BY R. Boundouki	CHECKED M. Benoit	
QUANTITIES	BY R. Boundouki	CHECKED A. Baumberger	

PREPARED FOR THE STATE OF CALIFORNIA DEPARTMENT OF TRANSPORTATION

R. Manzanarez
PROJECT ENGINEER

BRIDGE NO. 34-0006L/R
KILOMETER POST 13.2/13.9

SAN FRANCISCO OAKLAND BAY BRIDGE
EAST SPAN SEISMIC SAFETY PROJECT
SELF-ANCHORED SUSPENSION BRIDGE
(SUPERSTRUCTURE & TOWER)

BIKEPATH DETAILS NO. 18

Rev. Date: 5-18-98

ORIGINAL SCALE IN MILLIMETERS FOR REDUCED PLANS 0 10 20 30 40 50 60 70 80 90 100

CU 04
EA 0120F1

DISREGARD PRINTS BEARING EARLIER REVISION DATES 08/20/10

REVISION DATES (PRELIMINARY STAGE ONLY)

SHEET 432S2R1 OF

FILE => I:\bb\04-012001\sas\contract plans and cco\cco\cco#186\2-revision 02-04-11\dgn\agbwd16b.dgn

100% PS&E

USERNAME => arivera DATE PLOTTED => 03 FEB 2011 TIME PLOTTED => 11:23:48