DIST.	COUNTY	ROUTE	KILOMETER POST TOTAL PROJECT	SHEET NO.	TOTAL SHEETS
04	SF	80	13.2/13.9	840S2R1	1204

Caltrans Metric

REGISTERED ENGINEER - CIVIL

08-20-10

PLANS APPROVAL DATE

REGISTERED PROFESSIONAL ENGINEER Marwan N. Nader No. C 054426 Exp. 12/31/11 CIVIL STATE OF CALIFORNIA

The State of California or its officers or agents shall not be responsible for the accuracy or completeness of electronic copies of this plan sheet.

T.Y. LIN / MOFFATT & NICHOL
825 BATTERY STREET
SAN FRANCISCO, CA 94111

Caltrans now has a web site! To get to the web site, go to: http://www.dot.ca.gov

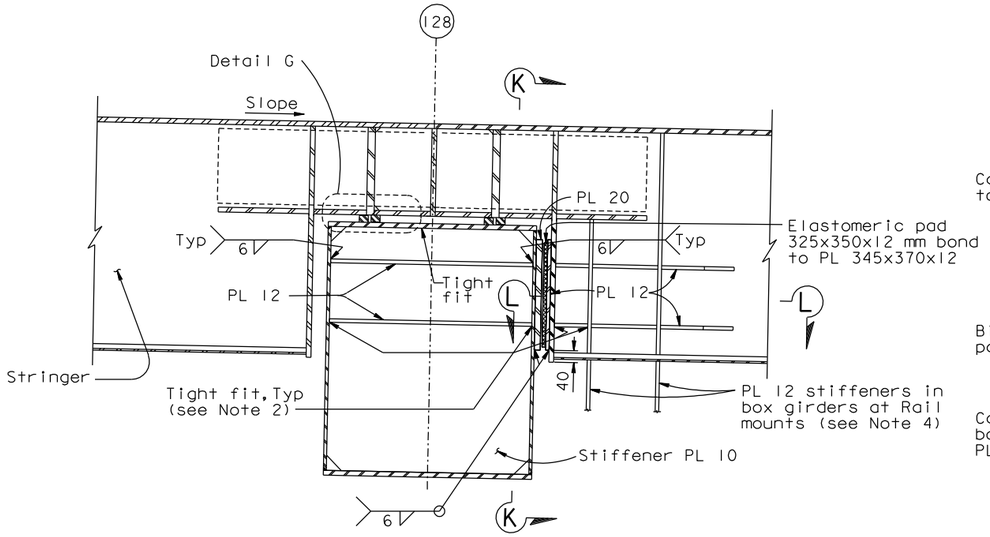

SECTION D-D (Section D'-D' similar)

1:10

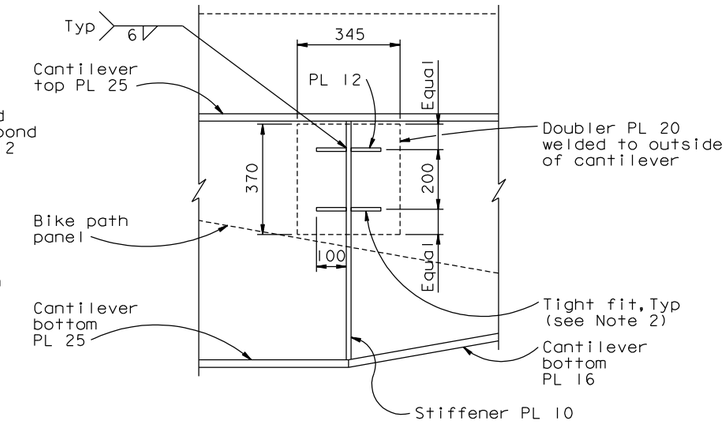

SECTION K-K

1:10

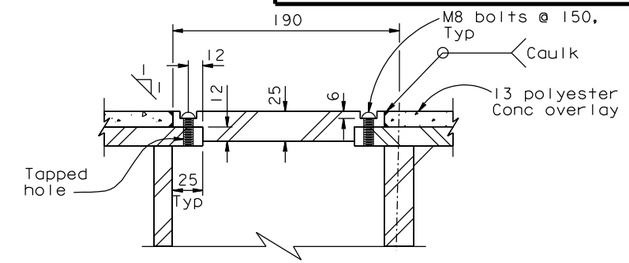

DETAIL F

1:2.5

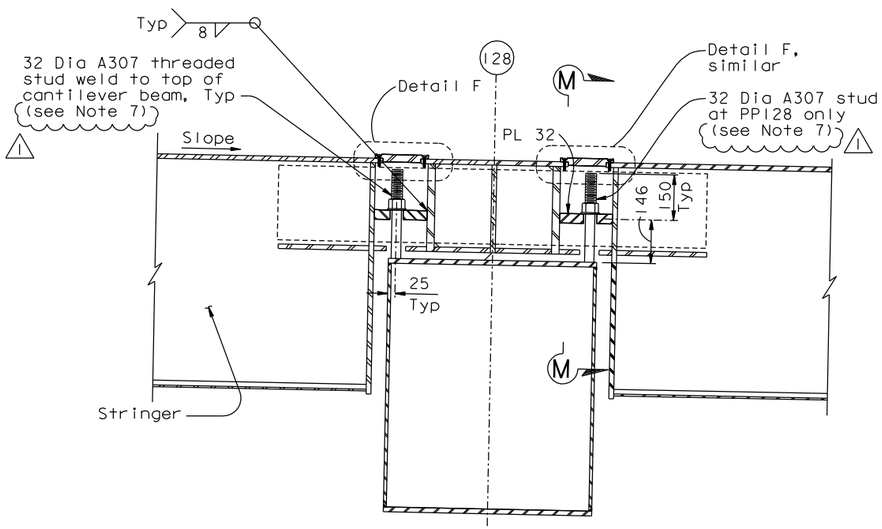

SECTION E-E (Section E'-E' similar)

1:10

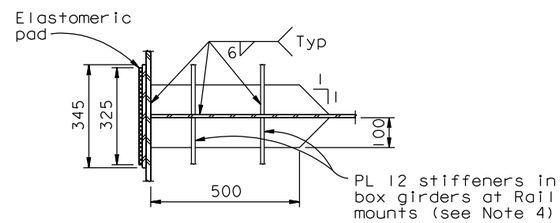

SECTION L-L

1:10

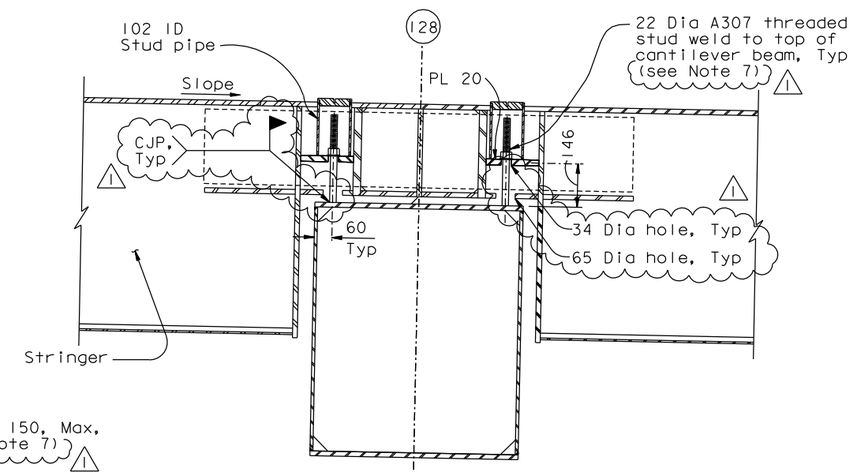

SECTION N-N (See Note 3)

1:10

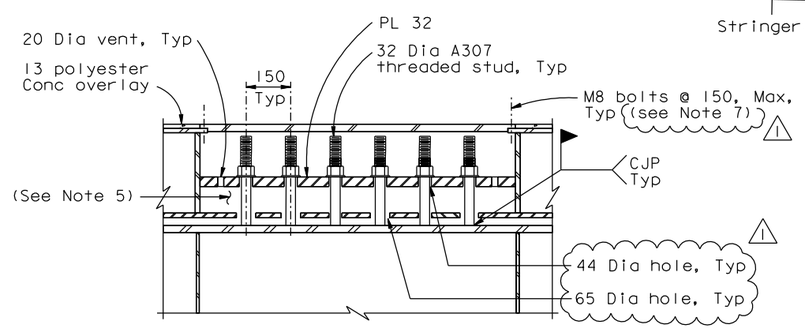

SECTION M-M

1:10

NOTES:

1. For information not shown, see "Bikepath Details No.1 through "Bikepath Details No.4", "Bikepath Details No.13" and "E2/E3 Bikepath Traveler Rails" sheets.
2. Plate shall be tight-fit prior to welding.
3. For Details not shown, see Section H-H on "Bikepath Details No.14" sheet.
4. For information not shown, see "E2/E3 Bikepath Traveler Rails-03" sheet.
5. After installation of bikepath panel, fill space with expandable polyurethane foam filler.
6. For Detail G, see "Bikepath Details No.19" sheet.
7. ASTM A108 Grade C1018, with mechanical properties conforming to that of Type B Studs in AWS D1.1 Table 7.1, may be used in lieu of ASTM A307.

CONTRACT CHANGE ORDER NO. ____
SHEET ____ OF ____

REQUESTS FOR INFORMATION NOT ADDRESSED IN THIS CCO REMAIN IN FORCE

ALL DIMENSIONS ARE IN MILLIMETERS UNLESS OTHERWISE SHOWN

R. Valizadeh/V. Toan/Y.L./W.L./F.C.
DESIGN OVERSIGHT
Roya Valizadeh / Vong Toan / Y. Liu
SIGN OFF DATE 02/04/11

MARK	DATE	DESCRIPTIONS	BY	CH'D	CCO#
1	02/04/11	BIKEPATH STUD ISSUE	CC	MN	186
0	08/20/10	BIKEPATH DETAILS	RB	MN	99

REVISIONS

DESIGN	BY G. Baker	CHECKED M. Nader	
DETAILS	BY R. Boundouki	CHECKED M. Benoit	
QUANTITIES	BY R. Boundouki	CHECKED A. Baumberger	

PREPARED FOR THE STATE OF CALIFORNIA DEPARTMENT OF TRANSPORTATION

R. Manzanarez
PROJECT ENGINEER

BRIDGE NO. 34-0006L/R
KILOMETER POST 13.2/13.9

SAN FRANCISCO OAKLAND BAY BRIDGE
EAST SPAN SEISMIC SAFETY PROJECT
SELF-ANCHORED SUSPENSION BRIDGE
(SUPERSTRUCTURE & TOWER)

BIKEPATH DETAILS NO. 18

Rev. Date: 5-18-98

ORIGINAL SCALE IN MILLIMETERS FOR REDUCED PLANS 0 10 20 30 40 50 60 70 80 90 100

CU 04
EA 0120F1

DISREGARD PRINTS BEARING EARLIER REVISION DATES 08/20/10

REVISION DATES (PRELIMINARY STAGE ONLY)

SHEET 432S2R1 OF

FILE => I:\bb\04-012001\sas\contract plans and cco\cco\cco#186\2-revision 02-04-11\dgn\agbwd16b.dgn

100% PS&E

USERNAME => arivera DATE PLOTTED => 03 FEB 2011 TIME PLOTTED => 11:23:48