| DIST. | COUNTY | ROUTE | KILOMETER POST TOTAL PROJECT | SHEET NO. | TOTAL SHEETS |
|---|---|---|---|---|---|
| 04 | SF | 80 | 13.2/13.9 | 840SIRI | 1204 |

REGISTERED ENGINEER - CIVIL

08-20-10

PLANS APPROVAL DATE

*The State of California or its officers or agents shall not be responsible for the accuracy or completeness of electronic copies of this plan sheet.*

REGISTERED PROFESSIONAL ENGINEER Marwan N. Nader No. C 054426 Exp. 12/31/11 CIVIL STATE OF CALIFORNIA

T.Y. LIN / MOFFATT & NICHOL
825 BATTERY STREET
SAN FRANCISCO, CA 94111

*Caltrans now has a web site! To get to the web site, go to: http://www.dot.ca.gov*

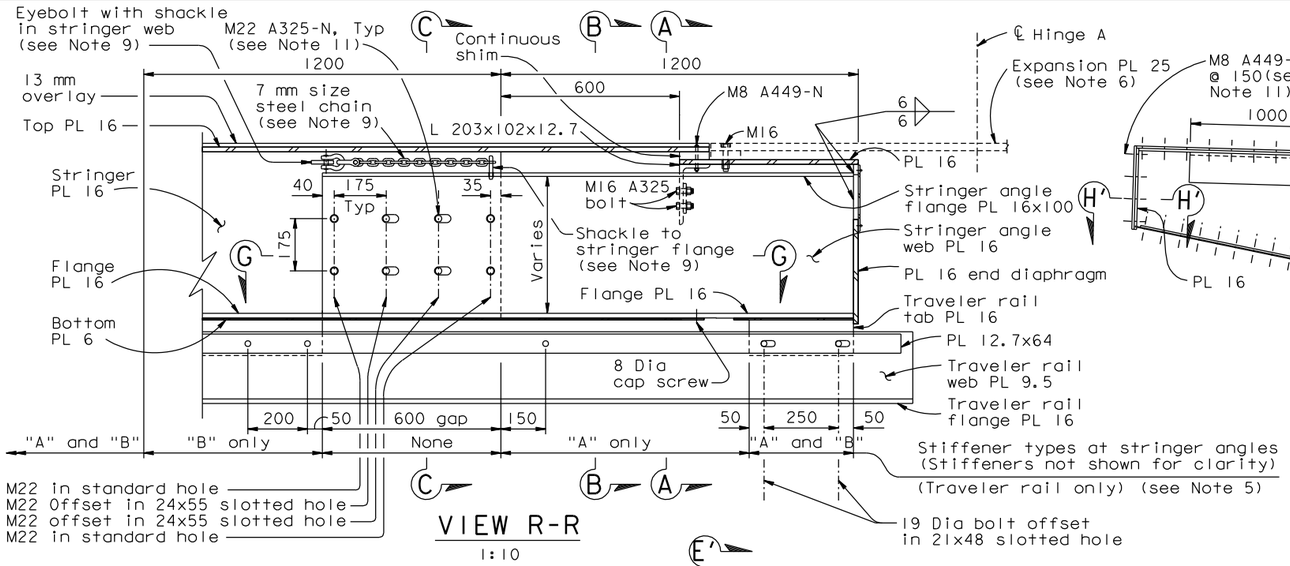


VIEW R-R
1:10

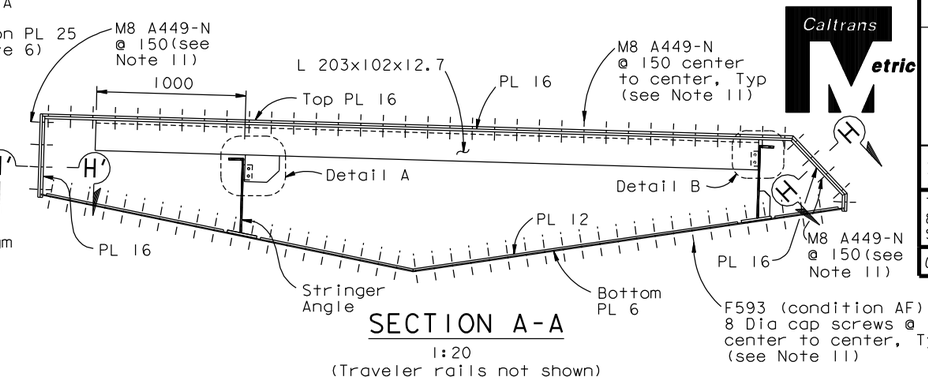


SECTION A-A
1:20
(Traveler rails not shown)

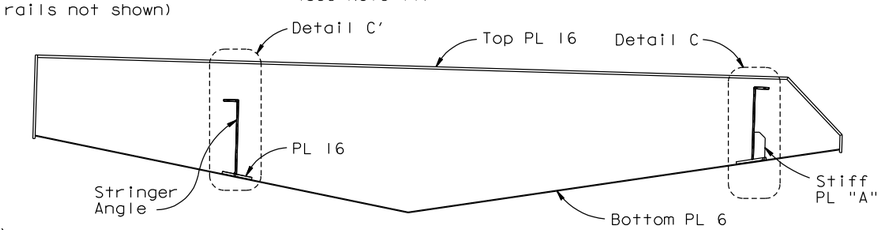


SECTION B-B
1:20
(Traveler rails not shown)

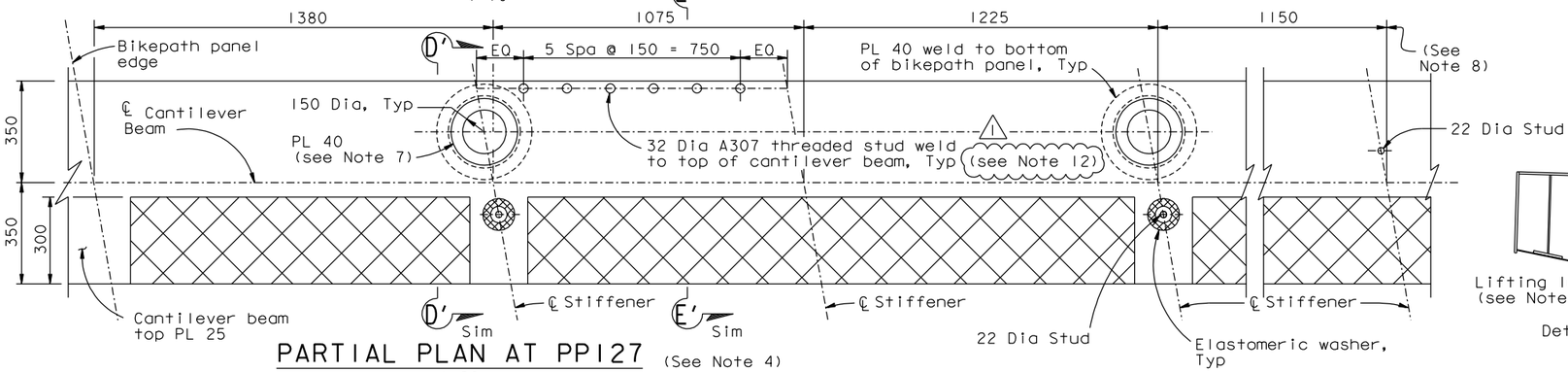


PARTIAL PLAN AT PP127 (See Note 4)
1:20

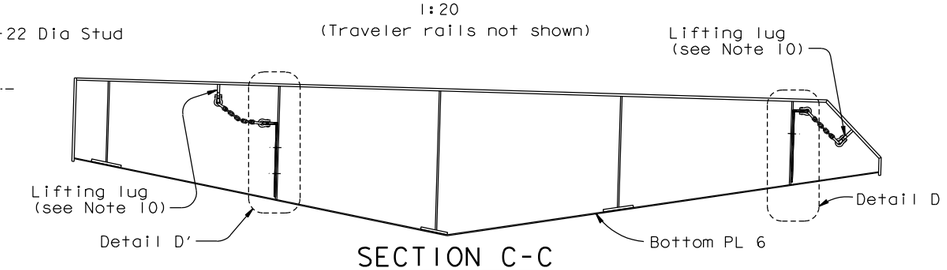


SECTION C-C
1:20
(Traveler rails not shown)

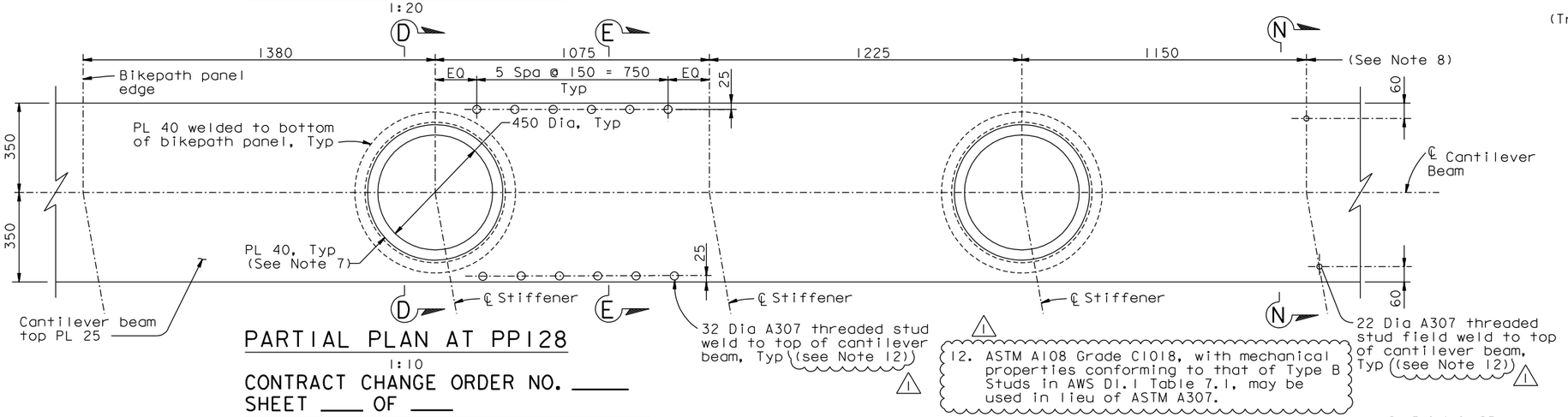


PARTIAL PLAN AT PP128
1:10

12. ASTM A108 Grade C1018, with mechanical properties conforming to that of Type B Studs in AWS D1.1 Table 7.1, may be used in lieu of ASTM A307.

NOTES:

1. For informatin not shown, see "Bikepath Details No.1" through "Bikepath Details No.4", "Bikepath Details No.13" and "E2/E3 Bikepath Traveler Rails" sheets.
2. For Sections D-D & E-E, see "Bikepath Details No.18" sheet.
3. For Sections F-F, G-G, H-H & N-N and Details A, B, C & D, see "Bikepath Details No.19" sheet.
4. Provide tie down studs per " Bikepath Details No.4" sheet.
5. For stringer angle stiffeners at traveler rails see "Bikepath Details No.19" sheet.
6. For Details not shown, see "Bikepath Details No.15" and "Bikepath Details No.15A" sheets.
7. 3 mm HDPE epoxy bonded to top of PL 40.
8. Stiffener plate spacing are shown for information only. Stiffener plate spacing to match bikepath stringer spacing.
9. Eyebolts, shackles and chains shall be hot-dipped galvanized and have a working load capacity of 16 kN.
10. For lifting lug details, see "Tower Access Details No.9" sheet.
11. Bolts shall be installed with threads included in the shear plane.

CONTRACT CHANGE ORDER NO. _____
SHEET ____ OF ____

*REQUESTS FOR INFORMATION NOT ADDRESSED IN THIS CCO REMAIN IN FORCE*

ALL DIMENSIONS ARE IN MILLIMETERS UNLESS OTHERWISE SHOWN

R. Valizadeh/V. Toan/Y.L./W.L./F.C.
DESIGN OVERSIGHT
Roya Valizadeh / Vong Toan / Y. Liu
SIGN OFF DATE 02/04/11

| MARK | DATE | DESCRIPTIONS | BY | CH'D | CCO# |
|---|---|---|---|---|---|
| 1 | 02/04/11 | BIKEPATH STUD ISSUE | CC | MN | 186 |
| 0 | 08/20/10 | BIKEPATH DETAILS | RB | MN | 99 |

REVISIONS

| | BY | CHECKED |
|---|---|---|
| DESIGN | G. Baker | M. Nader |
| DETAILS | R. Boundouki | M. Benoit |
| QUANTITIES | R. Boundouki | A. Baumberger |

**PREPARED FOR THE STATE OF CALIFORNIA DEPARTMENT OF TRANSPORTATION**

R. Manzanarez
PROJECT ENGINEER

BRIDGE NO. 34-0006L/R
KILOMETER POST 13.2/13.9

SAN FRANCISCO OAKLAND BAY BRIDGE
EAST SPAN SEISMIC SAFETY PROJECT
SELF-ANCHORED SUSPENSION BRIDGE
(SUPERSTRUCTURE & TOWER)

# BIKEPATH DETAILS NO. 17

Rev. Date: 5-18-98

ORIGINAL SCALE IN MILLIMETERS FOR REDUCED PLANS 0 10 20 30 40 50 60 70 80 90 100

CU 04
EA 0120F1

DISREGARD PRINTS BEARING EARLIER REVISION DATES

REVISION DATES (PRELIMINARY STAGE ONLY): 08/20/10

SHEET 423SIRI OF

FILE => I:\bb\04-012001\sas\contract plans and cco\cco\cco#186\2-revision 02-04-11\dgn\agbwd16a.dgn

USERNAME => arivera DATE PLOTTED => 03 FEB 2011 TIME PLOTTED => 11:22:57

100 % PS&E