DIST.	COUNTY	ROUTE	KILOMETER POST TOTAL PROJECT	SHEET NO.	TOTAL SHEETS
04	SF	80	13.2/13.9	838R5	1204

Caltrans Metric

REGISTERED ENGINEER - CIVIL

12-6-04

PLANS APPROVAL DATE

REGISTERED PROFESSIONAL ENGINEER Tien Hung Ho No. C 43990 Exp. 6/30/11 CIVIL STATE OF CALIFORNIA

The State of California or its officers or agents shall not be responsible for the accuracy or completeness of electronic copies of this plan sheet.

T.Y. LIN / MOFFATT & NICHOL
825 BATTERY STREET
SAN FRANCISCO, CA 94111

Caltrans now has a web site! To get to the web site, go to: http://www.dot.ca.gov

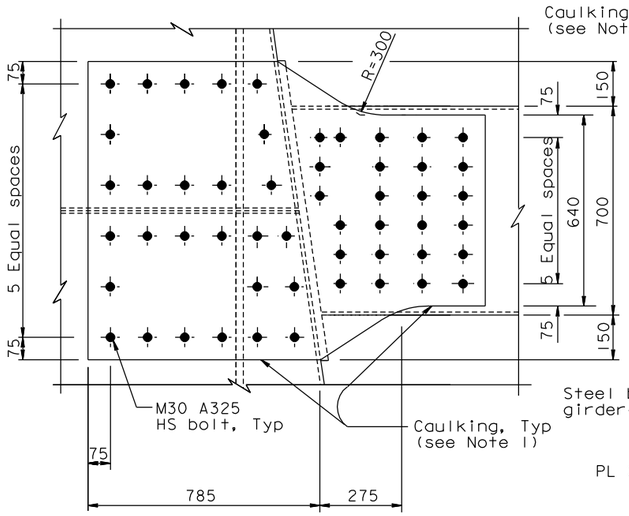

VIEW J-J
1:10

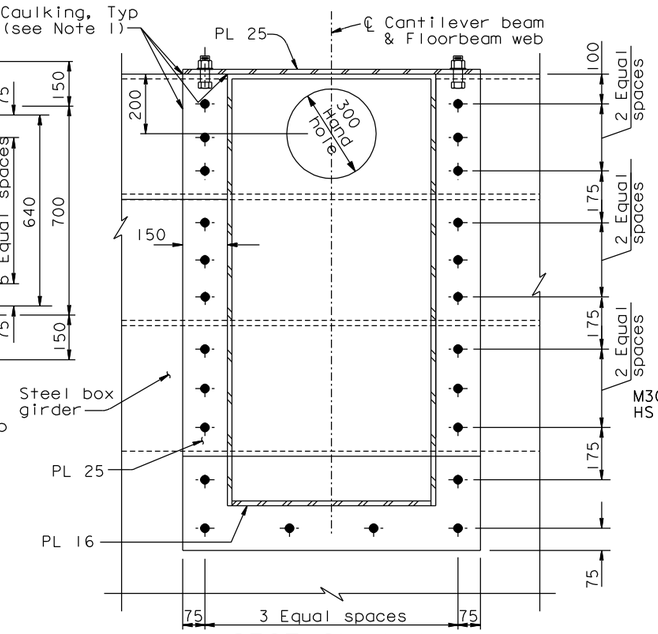

SECTION K-K
1:10

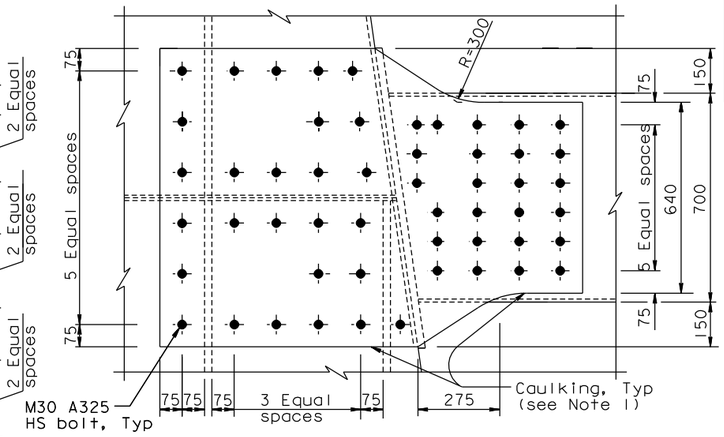

VIEW L-L
1:10

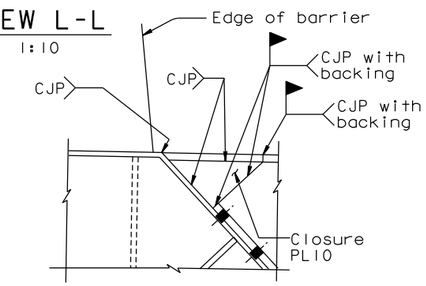

DETAIL A
1:5

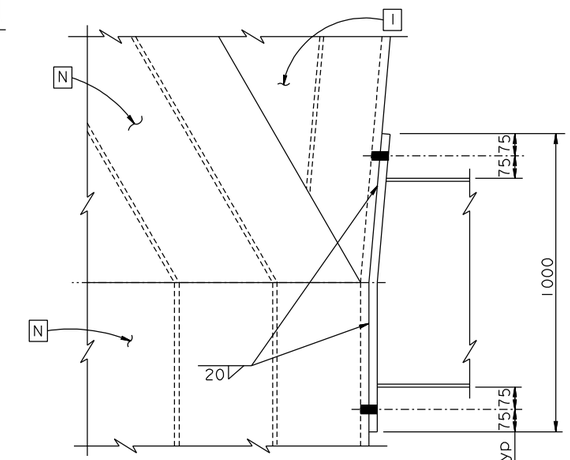

SECTION P-P
1:10

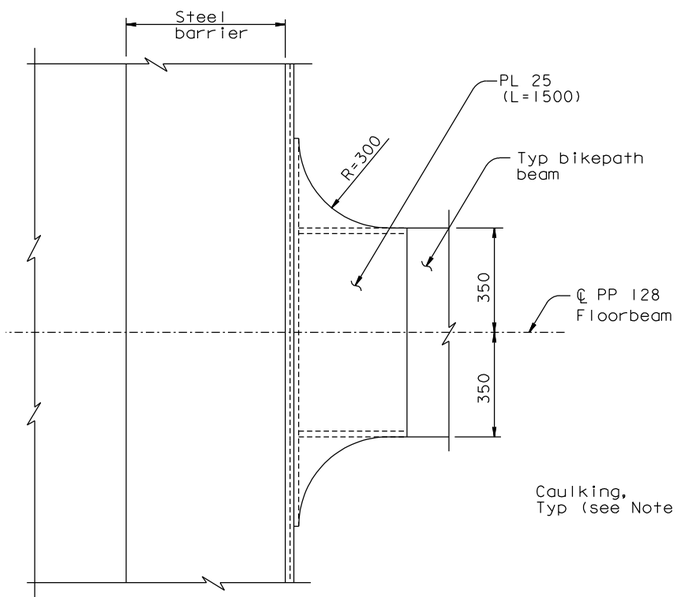

VIEW M-M
1:10

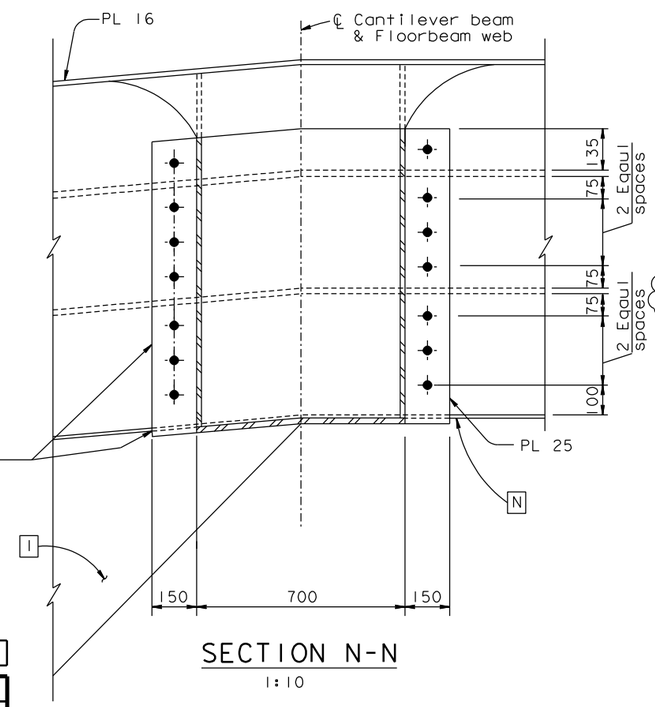

SECTION N-N
1:10

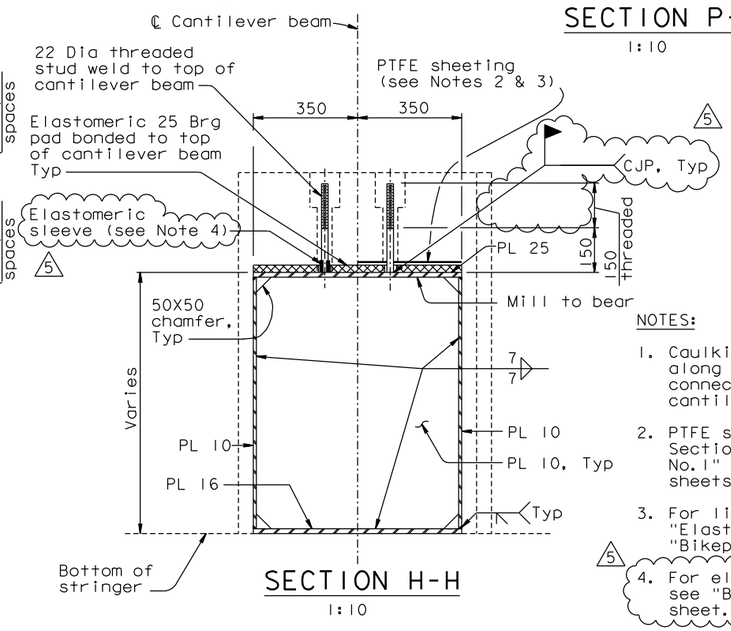

SECTION H-H
1:10

NOTES:

1. Caulking shall be provided along all edges of bolted connection between bikepath cantilever beam and box girder.
2. PTFE sheeting, see similar Section A-A on "Bikepath Details No. 1" and "Bikepath Details No. 4" sheets.
3. For limits of PTFE, see also "Elastomeric Bearing Pad" on "Bikepath Details No. 4" sheet.
4. For elastomeric sleeve detail, see "Bikepath Details No. 4A" sheet.

ALL DIMENSIONS ARE IN MILLIMETERS UNLESS OTHERWISE SHOWN

CONTRACT CHANGE ORDER NO. ____
SHEET ____ OF ____

REQUESTS FOR INFORMATION NOT ADDRESSED IN THIS CCO REMAIN IN FORCE

MARK	DATE	DESCRIPTIONS	BY	CH'D	CCO#
5	01/25/11	BIKEPATH STUD ISSUE	TH	CC	186
4	08/20/10	BIKEPATH DETAILS	TH	CC	99
3	09/25/09	BIKEPATH DETAILS	TH	HT	99
2	07/07/08	CAULKING	AS	TH	66
1	07/20/07	BIKEPATH BRACKETS	GB	TH	33

REVISIONS

R. Valizadeh/V. Toan/Y.L./W.L./F.C.
DESIGN OVERSIGHT
SIGN OFF DATE 01/29/11

DESIGN	BY T. Ho	CHECKED T. McMeans	
DETAILS	BY R. Xu	CHECKED P. Ritchie	
QUANTITIES	BY C. Bernardo	CHECKED S. Shi	

PREPARED FOR THE STATE OF CALIFORNIA DEPARTMENT OF TRANSPORTATION

R. Manzanarez
PROJECT ENGINEER

BRIDGE NO. 34-0006L/R
KILOMETER POST 13.2/13.9

SAN FRANCISCO OAKLAND BAY BRIDGE
EAST SPAN SEISMIC SAFETY PROJECT
SELF-ANCHORED SUSPENSION BRIDGE (SUPERSTRUCTURE & TOWER)

BIKEPATH DETAILS NO. 14

Rev. Date: 5-18-98

ORIGINAL SCALE IN MILLIMETERS FOR REDUCED PLANS 0 10 20 30 40 50 60 70 80 90 100

CU 04
EA 0120F1

DISREGARD PRINTS BEARING EARLIER REVISION DATES

REVISION DATES (PRELIMINARY STAGE ONLY) 05/31/01 04/08/02 07/04/02 12/18/02 11/13/05

SHEET 421R5 OF

FILE => I:\bb\04-012001\sas\contract plans and cco\cco\cco#186\1-original 01-25-11\dgn\agbwd14.dgn

USERNAME => DWinrow DATE PLOTTED => 25 JAN 2011 TIME PLOTTED => 14:29:22

100% PS&E