Caltrans now has a web site! To get to the web site, go to: http://www.dot.ca.gov

DIST.	COUNTY	ROUTE	KILOMETER POST TOTAL PROJECT	SHEET NO.	TOTAL SHEETS
04	SF	80	13.2/13.9	829R4	1204

REGISTERED ENGINEER - CIVIL

12-6-04
PLANS APPROVAL DATE

The State of California or its officers or agents shall not be responsible for the accuracy or completeness of electronic copies of this plan sheet.

REGISTERED PROFESSIONAL ENGINEER Tien Hung Ho No. C 43990 Exp. 6/30/11 CIVIL STATE OF CALIFORNIA

T.Y. LIN / MOFFATT & NICHOL
825 BATTERY STREET
SAN FRANCISCO, CA 94111

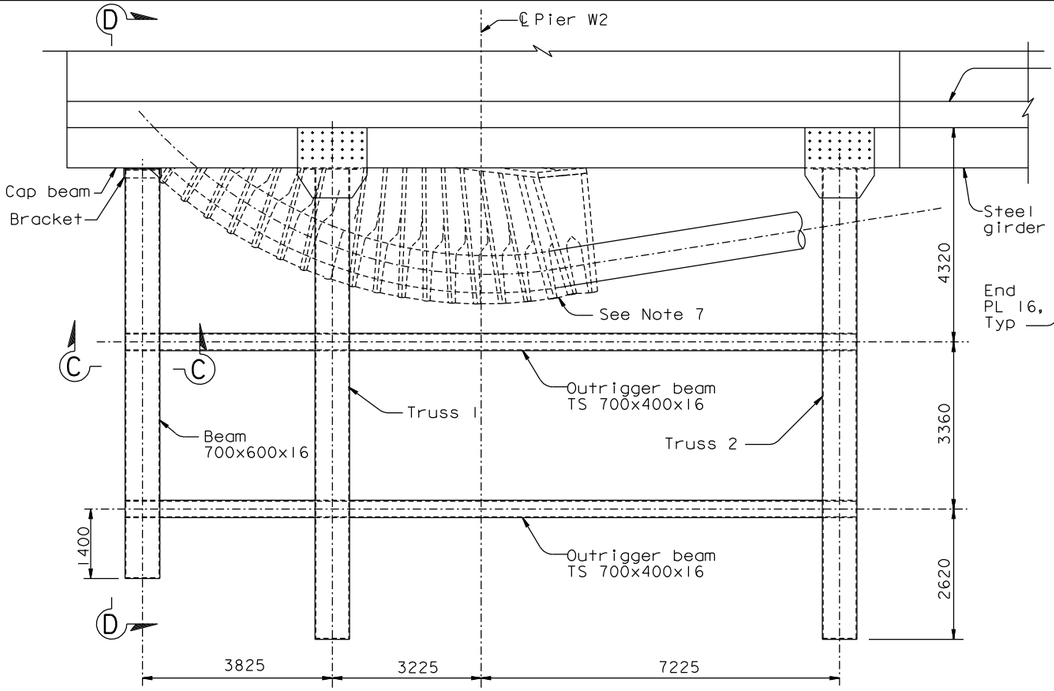

BIKEPATH PARTIAL PLAN AT CAP BEAM

1:60

NOTE: Stringer not shown, for clarity

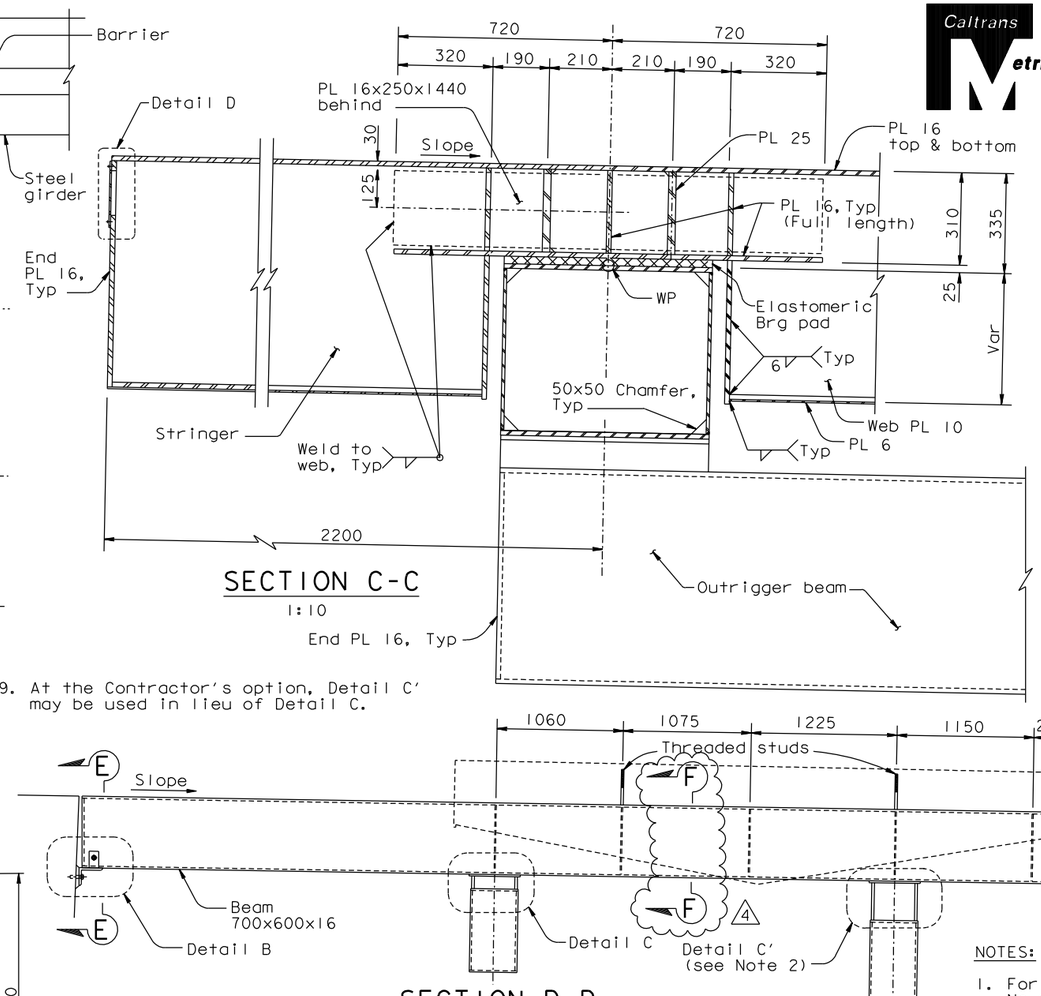

SECTION C-C

1:10

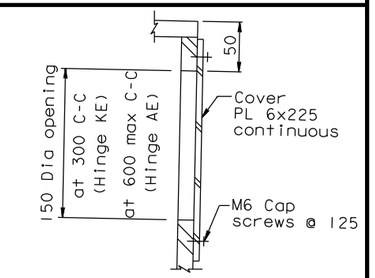

DETAIL D

1:3

9. At the Contractor's option, Detail C' may be used in lieu of Detail C.

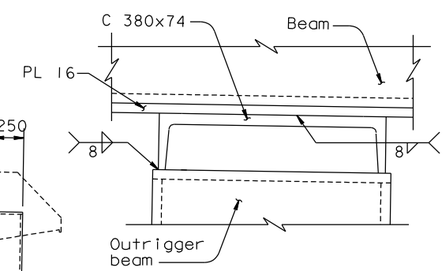

DETAIL C

1:5 (See Note 9)

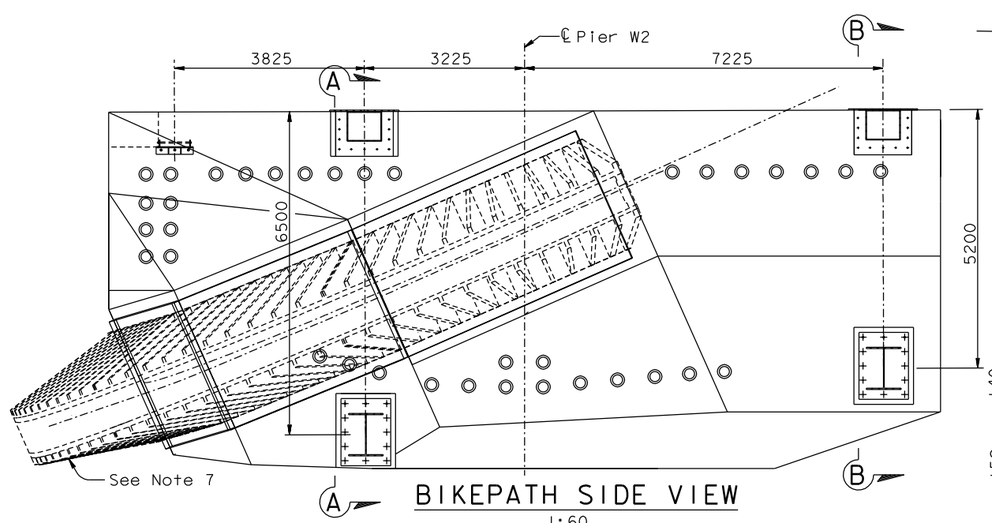

BIKEPATH SIDE VIEW

1:60

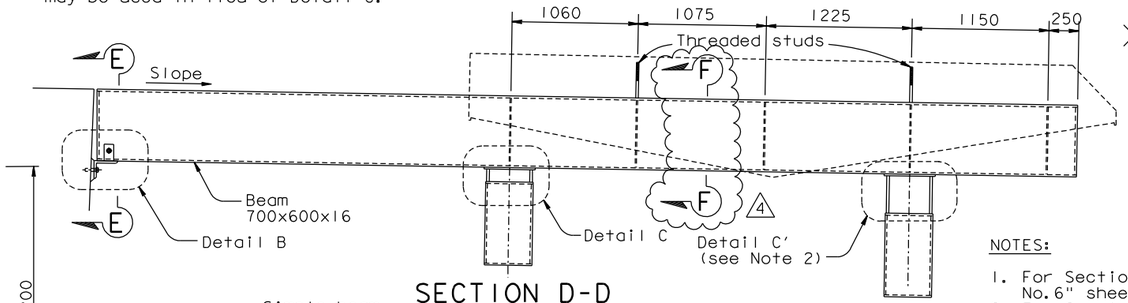

SECTION D-D

1:25

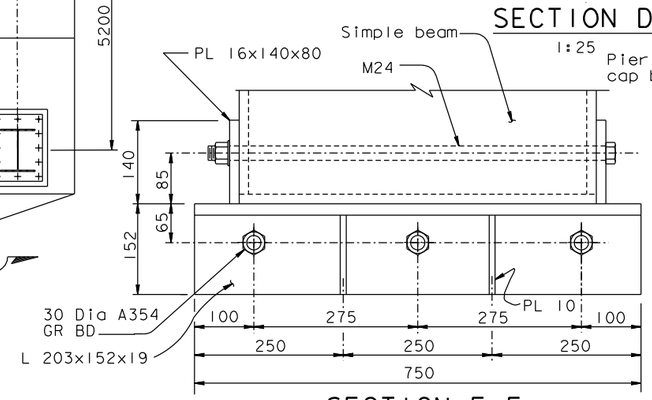

SECTION E-E

1:5

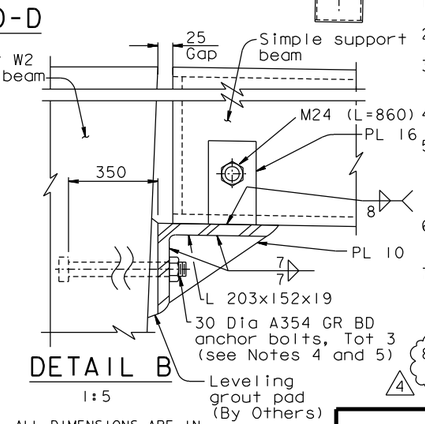

DETAIL B

1:5

ALL DIMENSIONS ARE IN MILLIMETERS UNLESS OTHERWISE SHOWN

NOTES:

1. For Section A-A, see "Bikepath Details No.6" sheet.
2. For Section B-B and Detail C', see "Bikepath Details No.7" sheet.
3. Cantilever Truss 1, Truss 2 and outrigger beams to be installed by Others after demolition of existing structure.
4. The tolerance for placement of the anchor bolts is ±25 mm.
5. The Contractor shall survey the as-built anchor bolt locations and prepare a template. This template shall be trial fit in the field prior to drilling the holes in the angle.
6. The Contractor shall furnish all anchor bolt components and shall provide corrosion protection covering exposed ends.
7. Views of the deviation saddle are for illustration only. For deviation saddle details, see "West Deviation Saddle Details" sheets.
8. For Section F-F, see "Bikepath Details No.4A" sheet. (4)

CONTRACT CHANGE ORDER NO. _____
SHEET ____ OF ____

REQUESTS FOR INFORMATION NOT ADDRESSED IN THIS CCO REMAIN IN FORCE

MARK	DATE	DESCRIPTIONS	BY	CH'D	CCO#
4	01/25/11	BIKEPATH STUD ISSUE	TH	CC	186
3	11/12/10	MISCELLANEOUS BIKEPATH DETAILS	CC	TH	172
2	08/20/10	BIKEPATH DETAILS	CC	TH	99
1	05/04/07	W2 CAP BEAM ISD RESOLUTION	AS	TH	34SI

REVISIONS

R. Valizadeh/V. Toan/Y.L./W.L./F.C.
DESIGN OVERSIGHT
SIGN OFF DATE 01/25/11

	BY	CHECKED
DESIGN	T. Ho	T. McMeans
DETAILS	R. Xu	P. Ritchie
QUANTITIES	C. Bernardo	S. Shi

PREPARED FOR THE STATE OF CALIFORNIA DEPARTMENT OF TRANSPORTATION

R. Manzanarez
PROJECT ENGINEER

BRIDGE NO. 34-0006L/R
KILOMETER POST 13.2/13.9

SAN FRANCISCO OAKLAND BAY BRIDGE
EAST SPAN SEISMIC SAFETY PROJECT
SELF-ANCHORED SUSPENSION BRIDGE
(SUPERSTRUCTURE & TOWER)

BIKEPATH DETAILS NO.5

Rev. Date: 5-18-98

ORIGINAL SCALE IN MILLIMETERS FOR REDUCED PLANS 0 10 20 30 40 50 60 70 80 90 100

CU 04
EA 0120F1

DISREGARD PRINTS BEARING EARLIER REVISION DATES

REVISION DATES (PRELIMINARY STAGE ONLY) 05/31/01 04/08/02 07/01/02 12/19/02 09/08/04 11/13/05

SHEET 412R4 OF

FILE => I:\bb\04-012001\sas\contract plans and cco\cco\cco#186\1-original 01-25-11\dgn\agbwd05.dgn

USERNAME => DWinrow DATE PLOTTED => 25 JAN 2011 TIME PLOTTED => 14:20:05

100% PS&E