Caltrans now has a web site! To get to the web site, go to: http://www.dot.ca.gov

Caltrans Metric

DIST.	COUNTY	ROUTE	KILOMETER POST TOTAL PROJECT	SHEET NO.	TOTAL SHEETS
04	SF	80	13.2/13.9	732R2	1204

George Baker
REGISTERED ENGINEER - CIVIL
12-6-04
PLANS APPROVAL DATE

REGISTERED PROFESSIONAL ENGINEER George S. Baker No. C 57112 Exp. 12/31/05 CIVIL STATE OF CALIFORNIA

The State of California or its officers or agents shall not be responsible for the accuracy or completeness of electronic copies of this plan sheet.

T.Y. LIN / MOFFATT & NICHOL
825 BATTERY STREET
SAN FRANCISCO, CA 94111

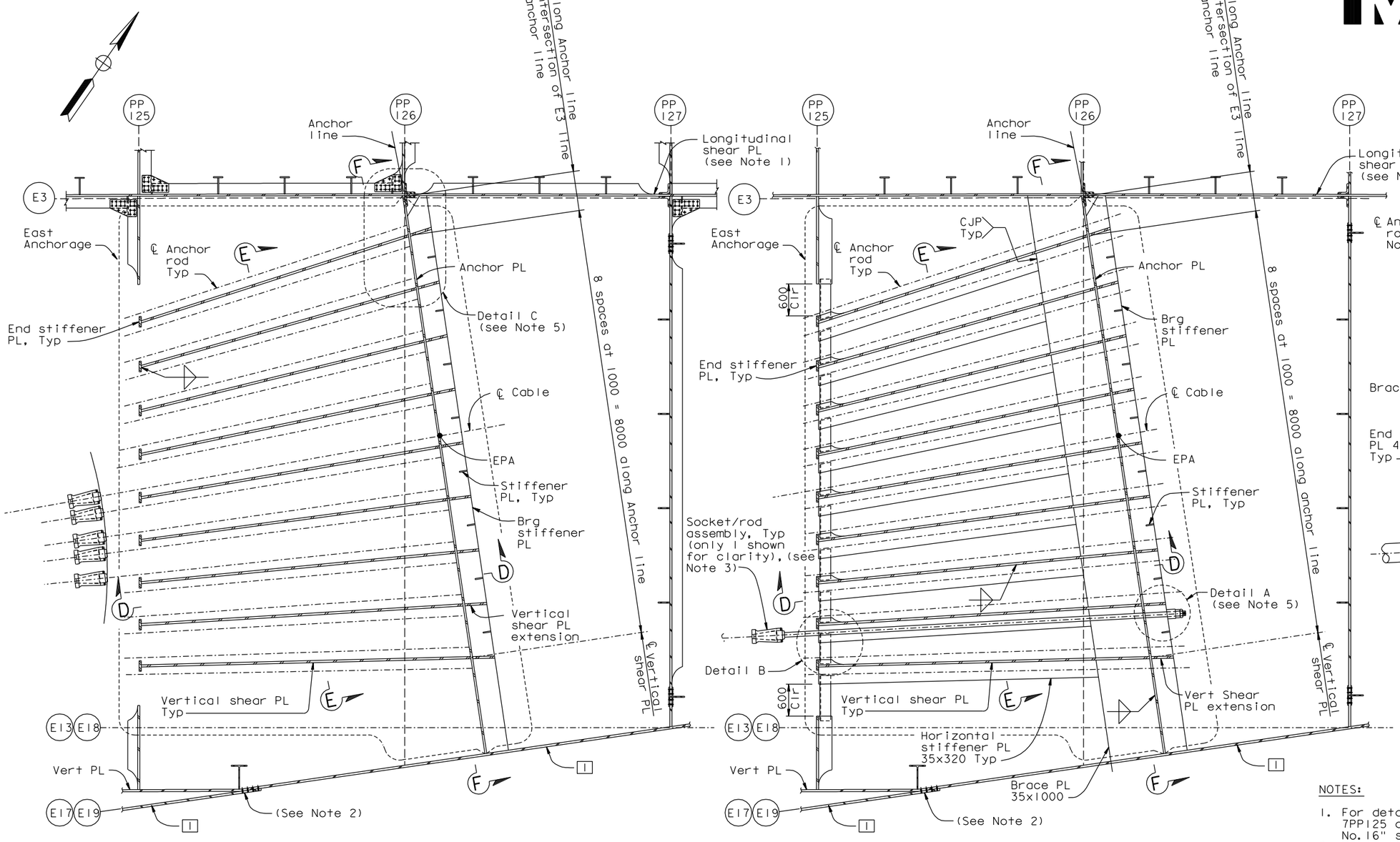

AT LEVEL OF TYPICAL BEARING STIFFENER

AT LEVEL OF BRACE PLATE

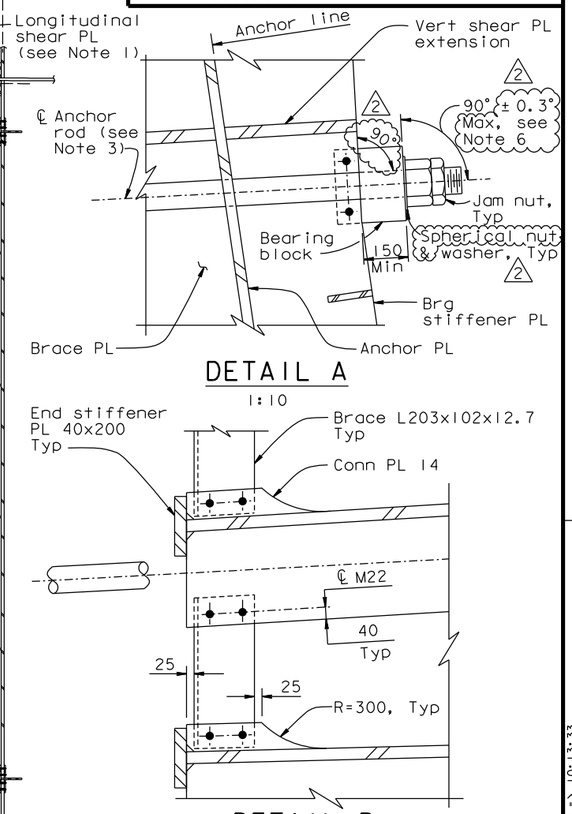

DETAIL A
1:10

DETAIL B
1:10

NOTES:

1. For details of longitudinal shear plate between 7PP125 and PP127, see "Girder At East Transition No.16" sheet.
2. For details of splice connection at girder plate 1 and vertical plate convergence, see "Girder At East Transition Details" sheets.
3. For strand socket and anchor rod details, see "East Cable Anchorage Details" sheet.
4. For Detail C and Sections D-D, E-E and F-F, see "East Cable Anchorage "E" Line Layout No.3" sheet.
5. Machining of bearing stiffener not shown in plan view.

6. The bearing blocks shall be aligned with the bearing stiffener plates. The angle between the bearing block and the anchor rod may vary (up to 90° ± 0.3° Max) due to the averaging of the bearing stiffeners orientation across each row of anchors.

ALL DIMENSIONS ARE IN MILLIMETERS UNLESS OTHERWISE SHOWN

REGISTERED PROFESSIONAL ENGINEER Marwan N. Nader No. C 054426 Exp. 12/31/11 CIVIL STATE OF CALIFORNIA

FOR REVISIONS ONLY

CONTRACT CHANGE ORDER NO. _____
SHEET ___ OF ___

REQUESTS FOR INFORMATION NOT ADDRESSED IN THIS CCO REMAIN IN FORCE

PLAN SECTION C-C
1:40

100% PS&E

R. Valizadeh/V. Toan/Y.L./W.L./F.C.
DESIGN OVERSIGHT
Reza Valizadeh / Vong Toan / Y. Liu
SIGN OFF DATE 04/08/11

MARK	DATE	DESCRIPTIONS	BY	CH'D	CCO#
2	04/08/11	SUSPENSION CABLE MISCELLANEOUS DETAILS	GB	MN	185
1	01/28/11	MISCELLANEOUS CABLE SYSTEM DETAILS	GB	MN	37S1

REVISIONS

	BY	CHECKED
DESIGN	G. Baker	J. Kuliki
DETAILS	M. Gulyas	T. McMeans
QUANTITIES	M. Gulyas	M. Roberts

PREPARED FOR THE STATE OF CALIFORNIA DEPARTMENT OF TRANSPORTATION

R. Manzanarez
PROJECT ENGINEER

BRIDGE NO. 34-0006L/R
KILOMETER POST 13.2/13.9

SAN FRANCISCO OAKLAND BAY BRIDGE
EAST SPAN SEISMIC SAFETY PROJECT
SELF-ANCHORED SUSPENSION BRIDGE
(SUPERSTRUCTURE & TOWER)
EAST CABLE ANCHORAGE "E" LINE LAYOUT NO. 2

Rev. Date: 5-18-98

ORIGINAL SCALE IN MILLIMETERS FOR REDUCED PLANS 0 10 20 30 40 50 60 70 80 90 100

CU 04
EA 0120F1

DISREGARD PRINTS BEARING EARLIER REVISION DATES

REVISION DATES (PRELIMINARY STAGE ONLY) 01/15/99 05/15/99 08/02/99 05/31/01 04/08/02 07/01/02 12/19/02

SHEET 315R2 OF

FILE => I:\bb\04-0120F1\sas\contract plans and cco\cco\cco*185\4-update 04-08-11\dgn\agan105.dgn

USERNAME => DWinrow DATE PLOTTED => 07 APR 2011 TIME PLOTTED => 10:13:33

DIST.	COUNTY	ROUTE	KILOMETER POST TOTAL PROJECT	SHEET NO.	TOTAL SHEETS
04	SF	80	13.2/13.9	733R3	1204

Caltrans Metric

George Baker
REGISTERED ENGINEER - CIVIL
12-6-04
PLANS APPROVAL DATE

REGISTERED PROFESSIONAL ENGINEER George S. Baker No. C57112 Exp. 12/31/05 CIVIL STATE OF CALIFORNIA

The State of California or its officers or agents shall not be responsible for the accuracy or completeness of electronic copies of this plan sheet.

T.Y. LIN / MOFFATT & NICHOL
825 BATTERY STREET
SAN FRANCISCO, CA 94111

Caltrans now has a web site! To get to the web site, go to: http://www.dot.ca.gov

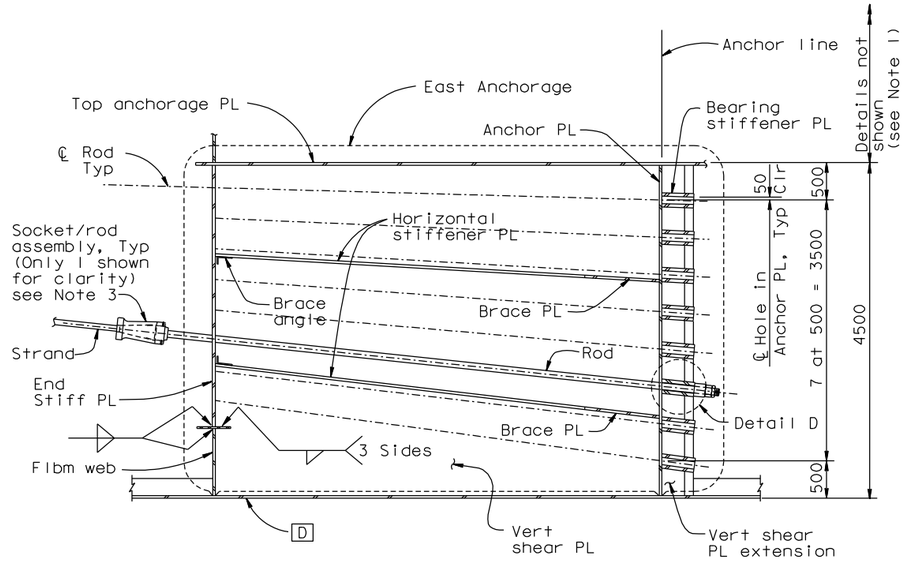

SECTION D-D
1:40

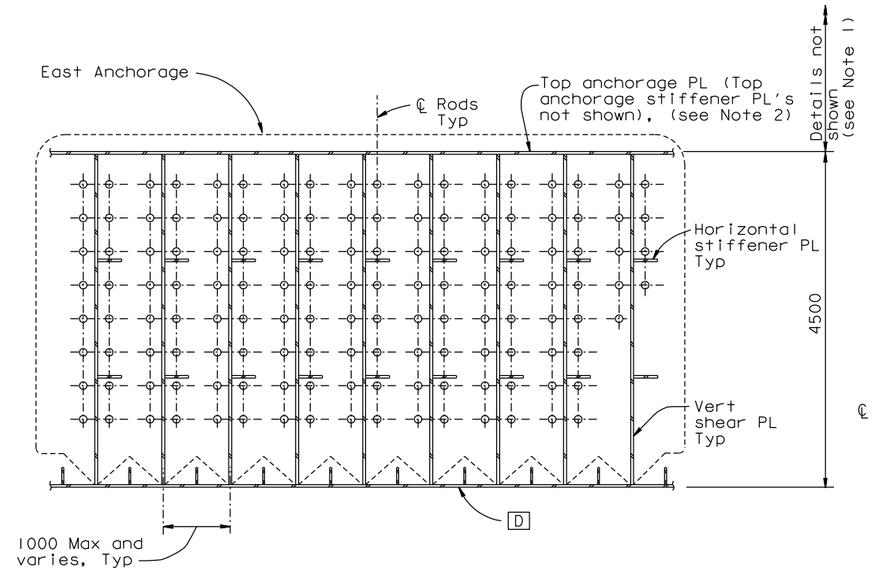

SECTION E-E
1:40

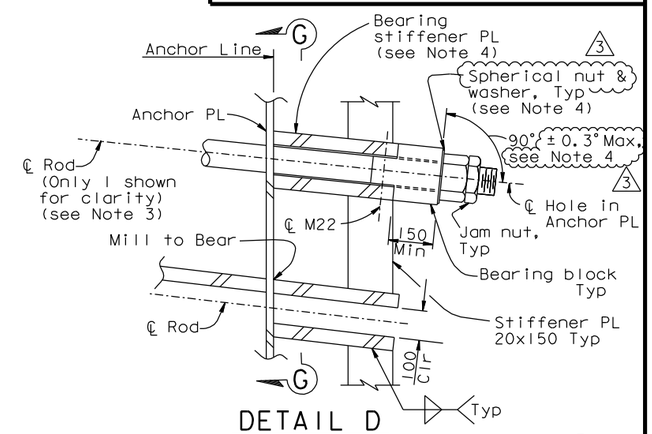

DETAIL D
1:10

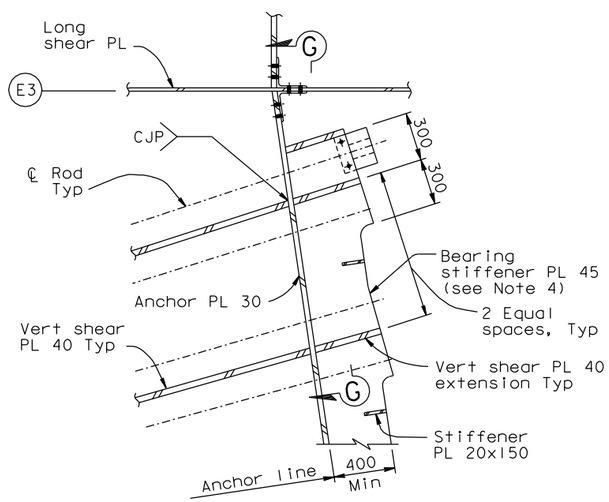

DETAIL C
1:20

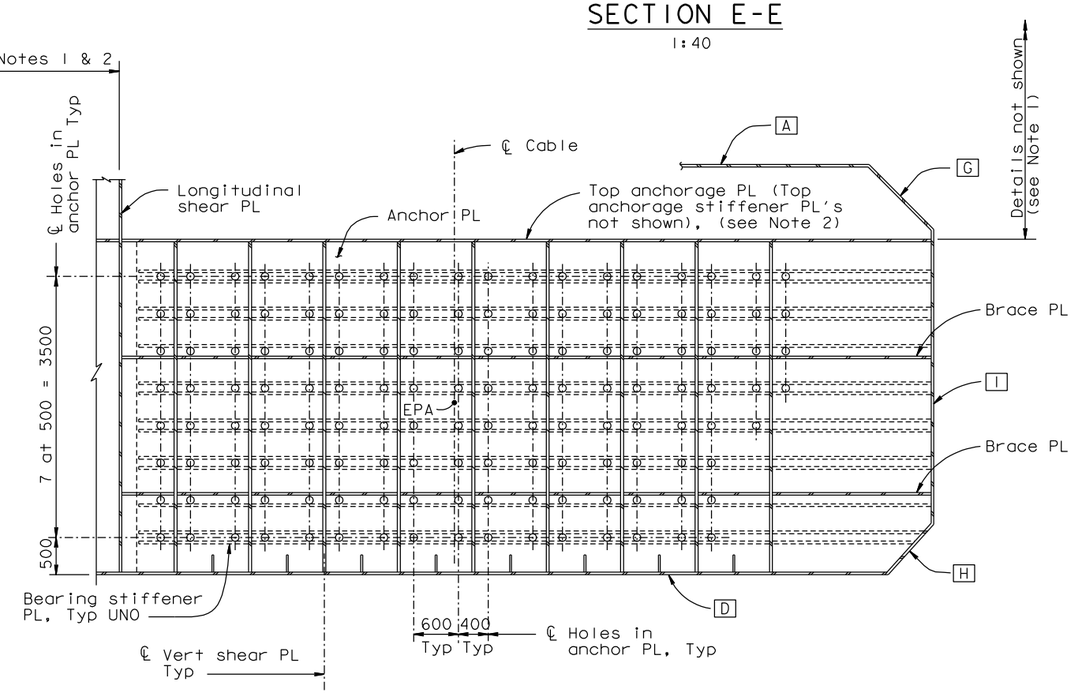

SECTION F-F
1:40

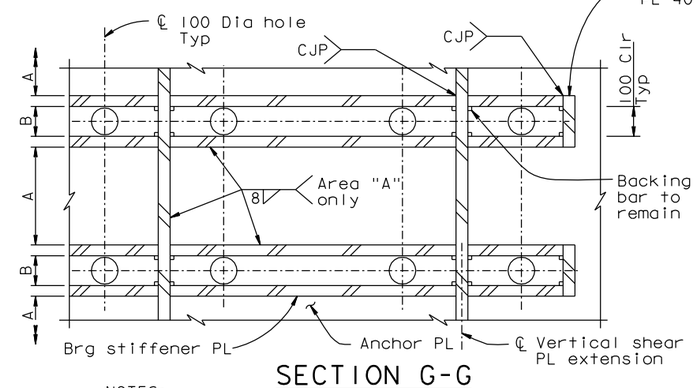

SECTION G-G
1:10

NOTES:

1. For girder details not shown, see "Girder At East Transition" sheets.
2. For top anchorage plate details not shown, see "Crossbeam at East Anchorage" and "Girder At East Transition" sheets.
3. For strand socket, transition anchor rod and bearing block details, see "East Cable Anchorage Details" sheet.
4. Bearing stiffener plates shall be machined to level the bearing block under the nut. Washers may be beveled to 1°. The installation tolerance for the bearing block/anchor rod angle is ±1°. Also see Note 6 on "East Cable Anchorage "E" Line Layout No. 2" sheet.

3

Daniel J. Turner
REGISTERED PROFESSIONAL ENGINEER Daniel J. Turner No. C 65033 Exp. 06/30/11 CIVIL STATE OF CALIFORNIA

FOR REVISIONS ONLY

CONTRACT CHANGE ORDER NO. _____
SHEET ____ OF ____

REQUESTS FOR INFORMATION NOT ADDRESSED IN THIS CCO REMAIN IN FORCE

MARK	DATE	DESCRIPTIONS	BY	CH'D	CCO#
3	03/25/11	SUSPENSION CABLE MISCELLANEOUS DETAILS	DT	GB	185
2	01/28/11	MISCELLANEOUS CABLE SYSTEM DETAILS	DT	GB	37S1
1	08/28/09	BEARING BLOCKS	DT	GB	78

REVISIONS

R. Valizadeh/V. Toan/Y.L./W.L./F.C.
DESIGN OVERSIGHT
Roya Valizadeh / Vong Toan / Y. Liu
SIGN OFF DATE 03/29/11

Rev. Date: 5-18-98

DESIGN	BY G. Baker	CHECKED J. Kulike	
DETAILS	BY M. Guylas	CHECKED T. McMeans	
QUANTITIES	BY M. Guylas	CHECKED M. Roberts	

PREPARED FOR THE STATE OF CALIFORNIA DEPARTMENT OF TRANSPORTATION

R. Manzanarez
PROJECT ENGINEER

ALL DIMENSIONS ARE IN MILLIMETERS UNLESS OTHERWISE SHOWN

BRIDGE NO. 34-0006L/R
KILOMETER POST 13.2/13.9

SAN FRANCISCO OAKLAND BAY BRIDGE
EAST SPAN SEISMIC SAFETY PROJECT
SELF-ANCHORED SUSPENSION BRIDGE
(SUPERSTRUCTURE & TOWER)

EAST CABLE ANCHORAGE "E" LINE LAYOUT NO. 3

ORIGINAL SCALE IN MILLIMETERS FOR REDUCED PLANS 0 10 20 30 40 50 60 70 80 90 100

CU 04
EA 0120F1

DISREGARD PRINTS BEARING EARLIER REVISION DATES

REVISION DATES (PRELIMINARY STAGE ONLY) 01/15/99 05/15/99 08/05/99 05/31/01 04/08/02 07/04/02 12/18/02 11/13/05

SHEET 316R3 OF

FILE => I:\bb\04-012001\sas\contract plans and cco\cco\cco*185\3-revision 03-25-11\dgn\agan106.dgn

USERNAME => DWinrow DATE PLOTTED => 25 MAR 2011 TIME PLOTTED => 08:42:10

100% PS&E

NOTES:

1. For details of longitudinal shear plate between PI25 and PP127, see "Girder At East Transition No.16" sheet.
2. For details of splice connection at girder plate and vertical plate convergence, see "East Cable Anchorage Details" sheet.
3. For strand socket and anchor rod details, see "East Cable Anchorage Details" sheet.
4. For Detail C and Sections D-D, E-E and F-F, see "East Cable Anchorage "W" Line Layout No.3" sheet.
5. Machining of bearing stiffener not shown in plan view.
6. The bearing blocks shall be aligned with the bearing stiffener plates. The angle between the bearing block and the anchor rod may vary (up to 90° ±0.3° Max) due to the averaging of the bearing stiffeners orientation across each row of anchors. (2)

Caltrans Metric

DIST.	COUNTY	ROUTE	KILOMETER POST TOTAL PROJECT	SHEET NO.	TOTAL SHEETS
04	SF	80	13.2/13.9	735R2	1204

George Baker
REGISTERED ENGINEER - CIVIL
12-6-04
PLANS APPROVAL DATE

REGISTERED PROFESSIONAL ENGINEER George S. Baker No. C57112 Exp. 12/31/05 CIVIL STATE OF CALIFORNIA

The State of California or its officers or agents shall not be responsible for the accuracy or completeness of electronic copies of this plan sheet.

T.Y. LIN / MOFFATT & NICHOL
825 BATTERY STREET
SAN FRANCISCO, CA 94111

Caltrans now has a web site! To get to the web site, go to: http://www.dot.ca.gov

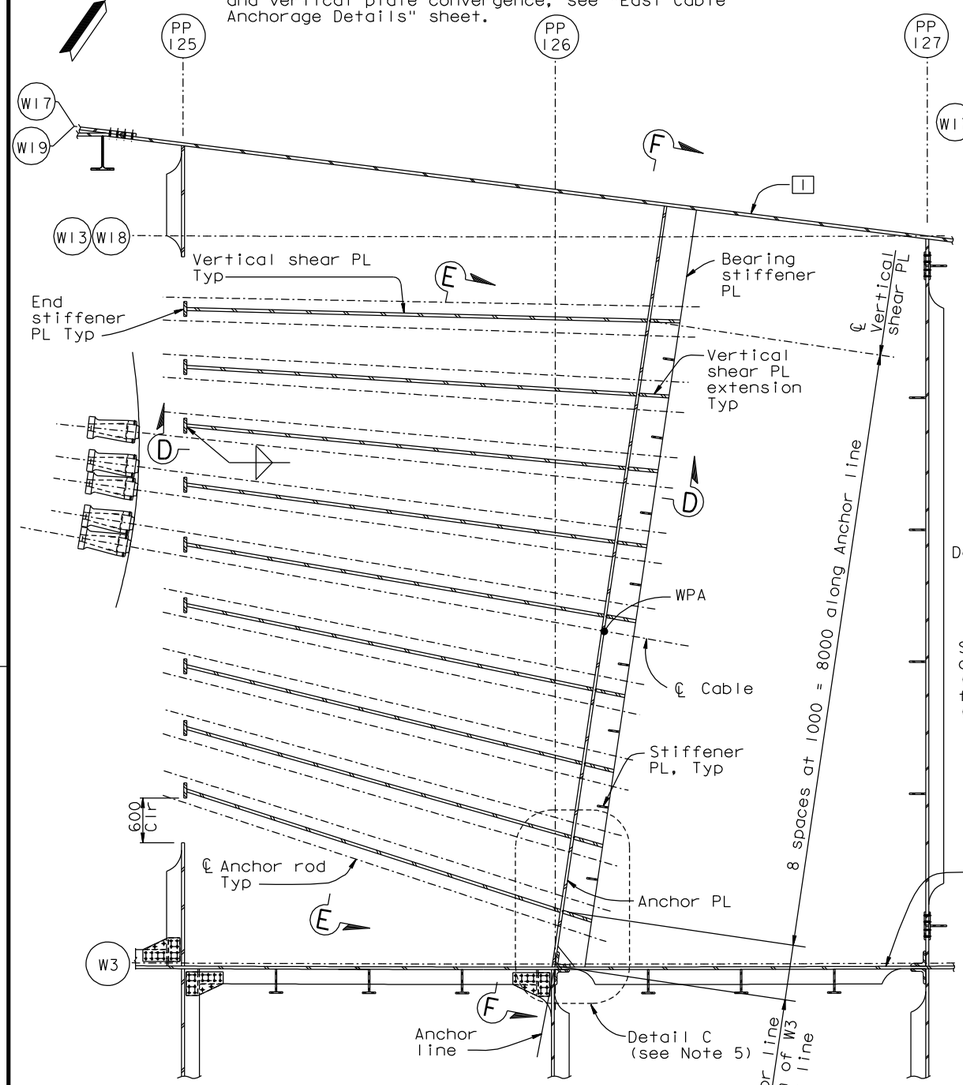

AT LEVEL OF TYPICAL BEARING STIFFENER

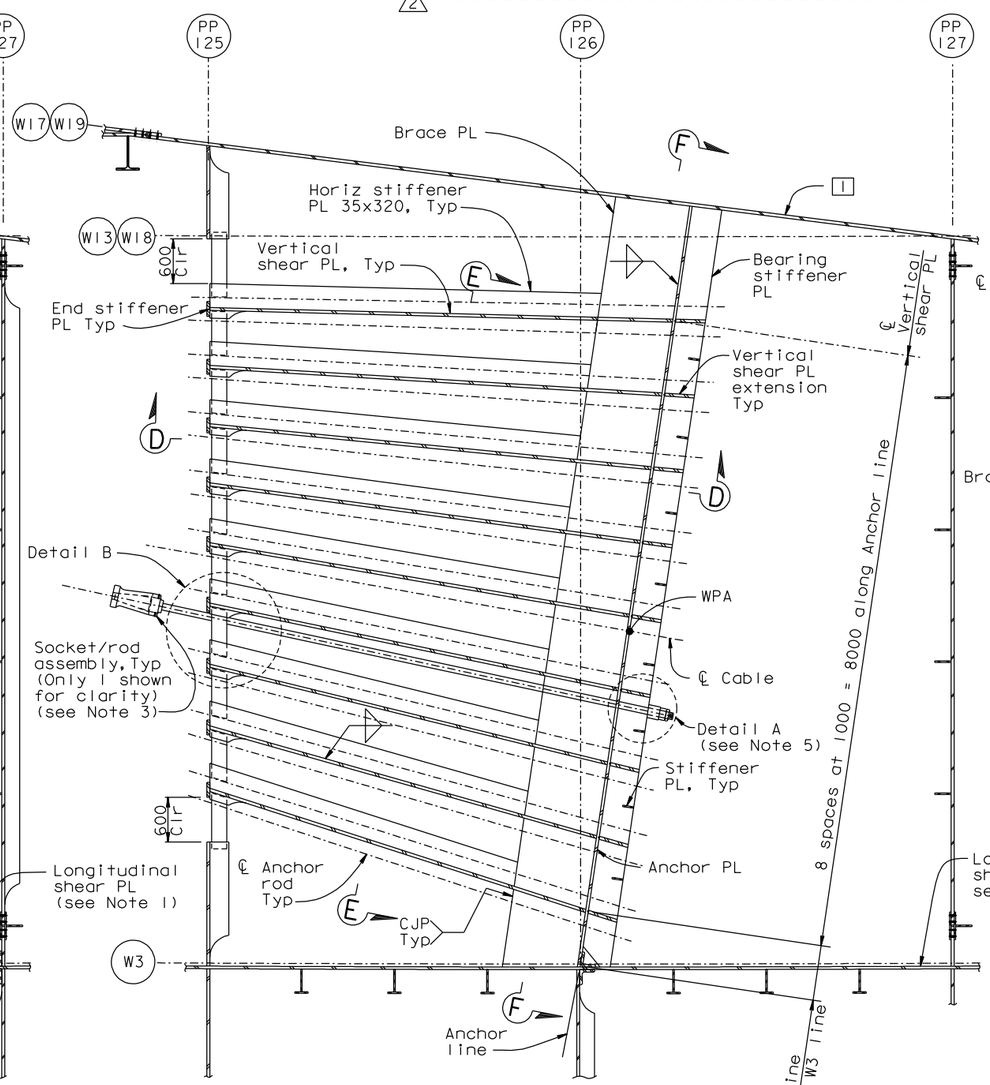

AT LEVEL OF BRACE PLATE

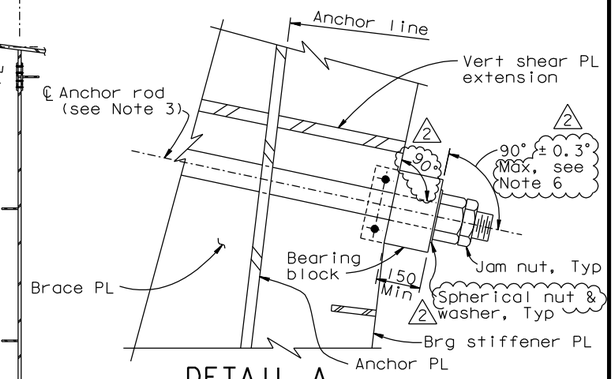

DETAIL A
1:10

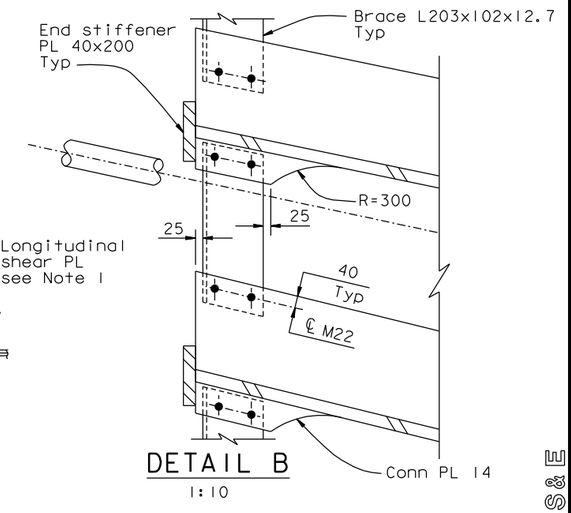

DETAIL B
1:10

PLAN SECTION C-C
1:40

ALL DIMENSIONS ARE IN MILLIMETERS UNLESS OTHERWISE SHOWN

REGISTERED PROFESSIONAL ENGINEER Marwan N. Nader No. C 054426 Exp. 12/31/11 CIVIL STATE OF CALIFORNIA

FOR REVISIONS ONLY

CONTRACT CHANGE ORDER NO. ____
SHEET ___ OF ___

REQUESTS FOR INFORMATION NOT ADDRESSED IN THIS CCO REMAIN IN FORCE

R. Valizadeh/V. Toan/Y.L./W.L./F.C.
DESIGN OVERSIGHT
Roya Valizadeh / Vong Toan / Y Lui
SIGN OFF DATE 04/08/11

MARK	DATE	DESCRIPTIONS	BY	CH'D	CCO#
2	04/08/11	SUSPENSION CABLE MISCELLANEOUS DETAILS	GB	MN	185
1	01/28/11	MISCELLANEOUS CABLE SYSTEM DETAILS	GB	MN	37S1

REVISIONS

	BY	CHECKED
DESIGN	G. Baker	J. Kuliki
DETAILS	M. Gulyas	T. McMeans
QUANTITIES	M. Gulyas	M. Roberts

PREPARED FOR THE STATE OF CALIFORNIA DEPARTMENT OF TRANSPORTATION

R. Manzanarez
PROJECT ENGINEER

BRIDGE NO. 34-0006L/R
KILOMETER POST 13.2/13.9

SAN FRANCISCO OAKLAND BAY BRIDGE
EAST SPAN SEISMIC SAFETY PROJECT
SELF-ANCHORED SUSPENSION BRIDGE
(SUPERSTRUCTURE & TOWER)
EAST CABLE ANCHORAGE "W" LINE LAYOUT NO.2

Rev. Date: 5-18-98

ORIGINAL SCALE IN MILLIMETERS FOR REDUCED PLANS 0 10 20 30 40 50 60 70 80 90 100

CU 04
EA 0120F1

DISREGARD PRINTS BEARING EARLIER REVISION DATES
REVISION DATES (PRELIMINARY STAGE ONLY) 01/18/99 05/25/99 08/02/99 05/14/01 04/08/02 01/07/02 12/19/02

SHEET 318R2 OF

FILE => I:\bb\04-012001\sas\contract plans and cco\cco\cco#185\4-update 04-08-11\dgn\agan108.dgn

100% PS&E

USERNAME => DWinrow DATE PLOTTED => 07 APR 2011 TIME PLOTTED => 10:14:48

DIST.	COUNTY	ROUTE	KILOMETER POST TOTAL PROJECT	SHEET NO.	TOTAL SHEETS
04	SF	80	13.2/13.9	736R3	1204

George Baker
REGISTERED ENGINEER - CIVIL
12-6-04
PLANS APPROVAL DATE

REGISTERED PROFESSIONAL ENGINEER George S. Baker No. C57112 Exp. 12/31/05 CIVIL STATE OF CALIFORNIA

The State of California or its officers or agents shall not be responsible for the accuracy or completeness of electronic copies of this plan sheet.

T.Y. LIN / MOFFATT & NICHOL
825 BATTERY STREET
SAN FRANCISCO, CA 94111

Caltrans now has a web site! To get to the web site, go to: http://www.dot.ca.gov

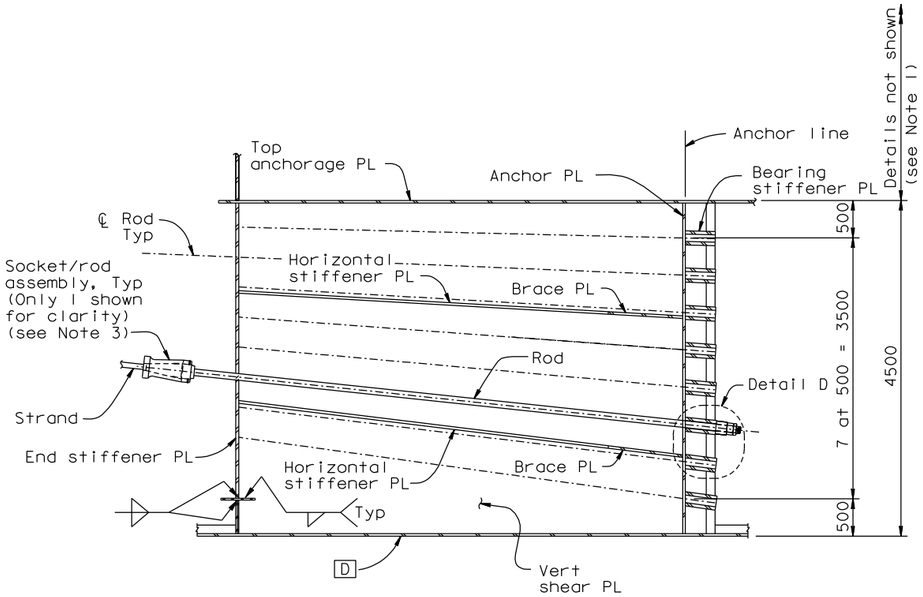

SECTION D-D
1:40

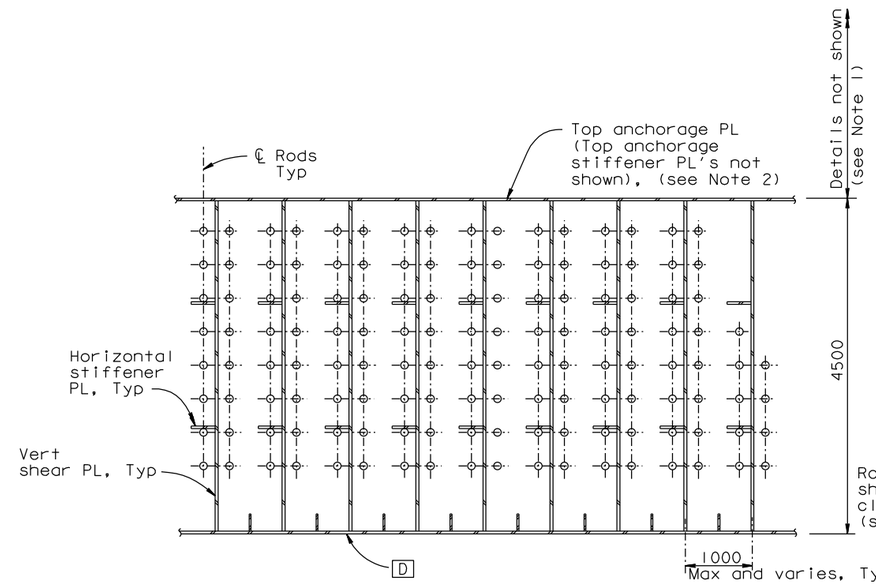

SECTION E-E
1:40

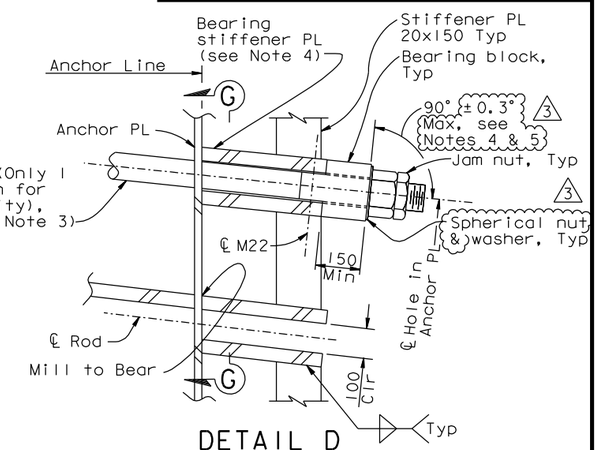

DETAIL D
1:10

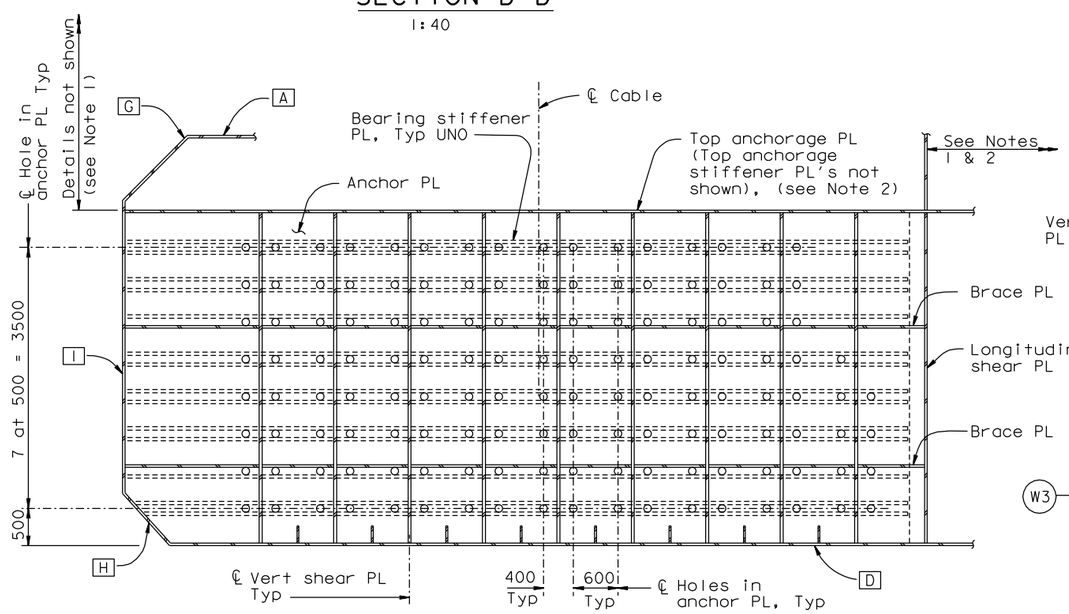

SECTION F-F
1:40

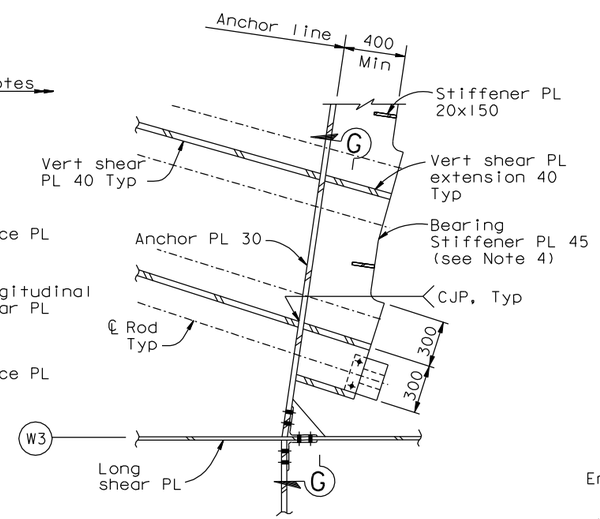

DETAIL C
1:20

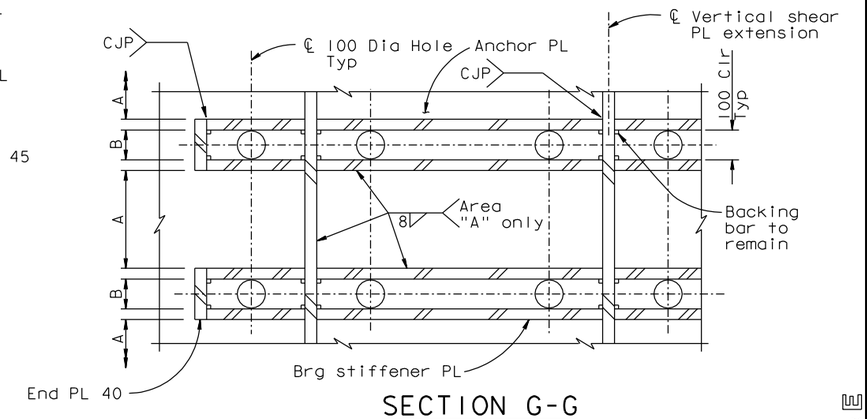

SECTION G-G
1:10

NOTES:

1. For girder details not shown, see "Girder At East Transition" sheets.
2. For top anchorage plate details not shown, see "Crossbeam At East Anchorage" and "Girder At East Transition" sheets.
3. For strand socket, transition anchor rod and bearing block details, see "East Cable Anchorage Details" sheet.
4. Bearing stiffeners plates shall be machined to level the bearing block under the nut. Washers may be beveled to 1°. The installation tolerance for the bearing block/anchor rod angle is ±1°. Also see Note 6 on "East Cable Anchorage "W" Line Layout No.2" sheet.
5. The bearing blocks shall be aligned with the bearing stiffener plates. The angle between the bearing block and the anchor rod may vary (up to 90° ±0.3° Max) due to the averaging of the bearing stiffeners across each row of anchors.

ALL DIMENSIONS ARE IN MILLIMETERS UNLESS OTHERWISE SHOWN

Daniel J. Turner
REGISTERED PROFESSIONAL ENGINEER Daniel J. Turner No. C 65033 Exp. 06/30/11 CIVIL STATE OF CALIFORNIA
FOR REVISIONS ONLY

CONTRACT CHANGE ORDER NO. _____
SHEET ____ OF ____

REQUESTS FOR INFORMATION NOT ADDRESSED IN THIS CCO REMAIN IN FORCE

MARK	DATE	DESCRIPTIONS	BY	CH'D	CCO#
3	03/25/11	SUSPENSION CABLE MISCELLANEOUS DETAILS	DT	GB	185
2	01/28/11	MISCELLANEOUS CABLE SYSTEM DETAILS	DT	GB	37S1
1	08/28/09	BEARING BLOCKS	DT	GB	78

REVISIONS

R. Valizadeh/V. Toan/Y.L./W.L./F.C.
DESIGN OVERSIGHT
Roya Valizadeh / Vong Toan / Y. Liu
SIGN OFF DATE 03/29/11

	BY	CHECKED
DESIGN	G. Baker	J. Kuliki
DETAILS	M. Gulyas	T. McMeans
QUANTITIES	M. Gulyas	M. Roberts

PREPARED FOR THE STATE OF CALIFORNIA DEPARTMENT OF TRANSPORTATION

R. Manzanarez
PROJECT ENGINEER

BRIDGE NO. 34-0006L/R
KILOMETER POST 13.2/13.9

SAN FRANCISCO OAKLAND BAY BRIDGE
EAST SPAN SEISMIC SAFETY PROJECT
SELF-ANCHORED SUSPENSION BRIDGE
(SUPERSTRUCTURE & TOWER)

EAST CABLE ANCHORAGE "W" LINE LAYOUT NO. 3

Rev. Date: 5-18-98

ORIGINAL SCALE IN MILLIMETERS FOR REDUCED PLANS 0 10 20 30 40 50 60 70 80 90 100

CU 04
EA 0120F1

DISREGARD PRINTS BEARING EARLIER REVISION DATES

REVISION DATES (PRELIMINARY STAGE ONLY) 01/18/99 05/15/99 08/02/99 05/14/01 04/08/02 07/01/02 12/18/02 11/13/05

SHEET 319R3 OF

FILE => I:\bb\04-012001\sas\contract plans and cco\cco\cco#185\3-revision 03-25-11\dgn\agan109.dgn

100% PS&E

USERNAME => DWinrow DATE PLOTTED => 25 MAR 2011 TIME PLOTTED => 08:50:47

DIST.	COUNTY	ROUTE	KILOMETER POST TOTAL PROJECT	SHEET NO.	TOTAL SHEETS
04	SF	80	13.2/13.9	737R3	1204

Caltrans Metric

George Baker
REGISTERED ENGINEER - CIVIL
12-6-04
PLANS APPROVAL DATE

REGISTERED PROFESSIONAL ENGINEER George S. Baker No. C57112 Exp. 12/31/05 CIVIL STATE OF CALIFORNIA

The State of California or its officers or agents shall not be responsible for the accuracy or completeness of electronic copies of this plan sheet.

T.Y. LIN / MOFFATT & NICHOL
825 BATTERY STREET
SAN FRANCISCO, CA 94111

Caltrans now has a web site! To get to the web site, go to: http://www.dot.ca.gov

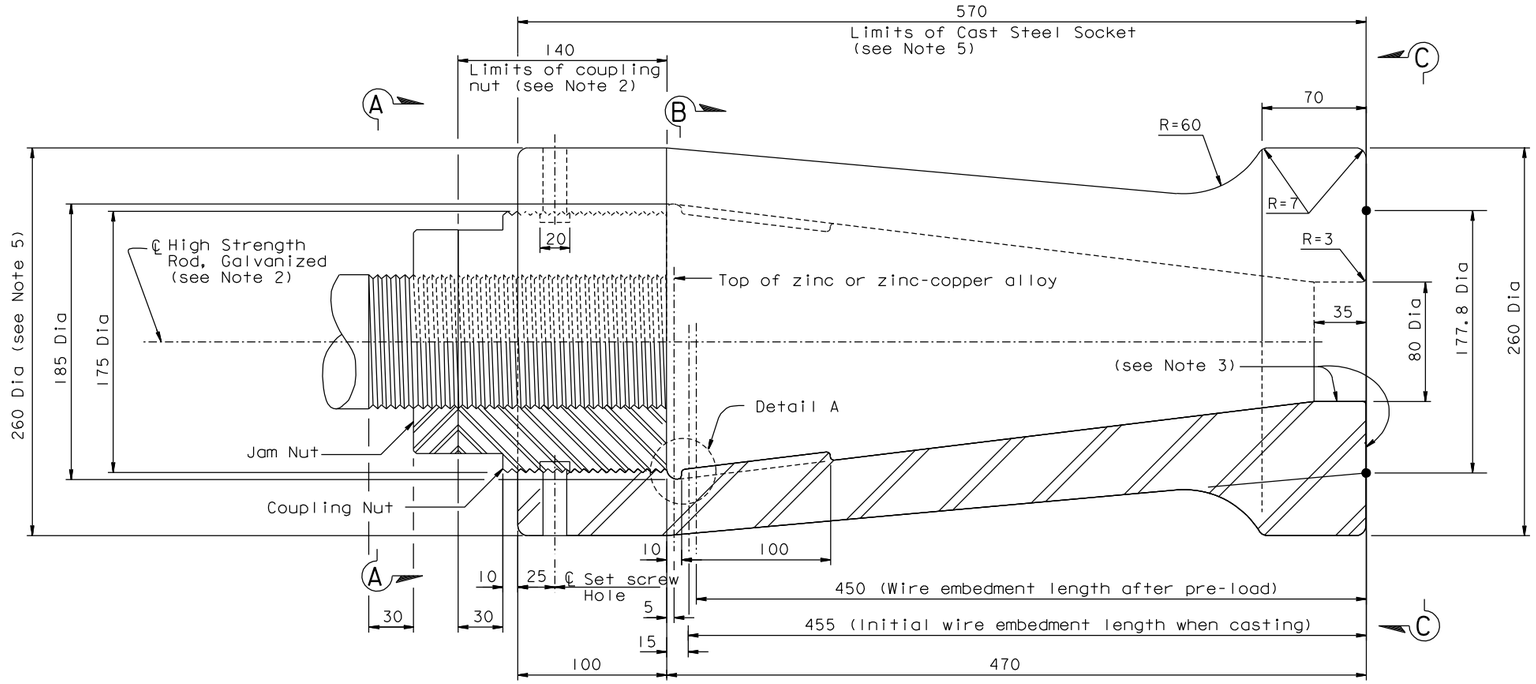

SOCKET DETAIL
1:2

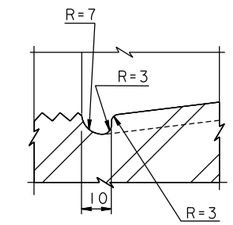

DETAIL A
1:1

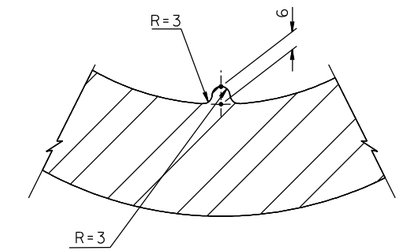

DETAIL B
1:1

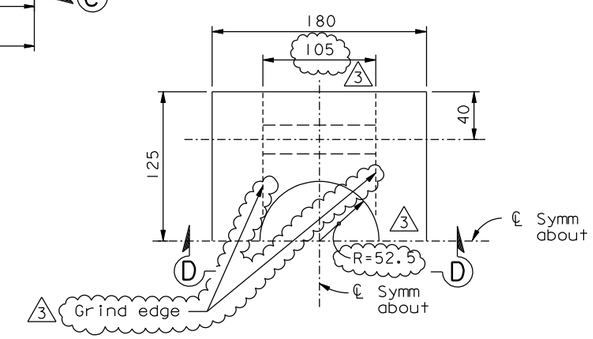

PLAN

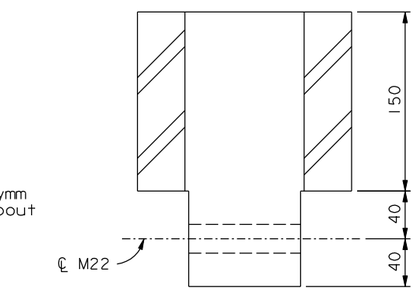

SECTION D-D

BEARING BLOCK DETAIL (See Note 6)
1:2.5

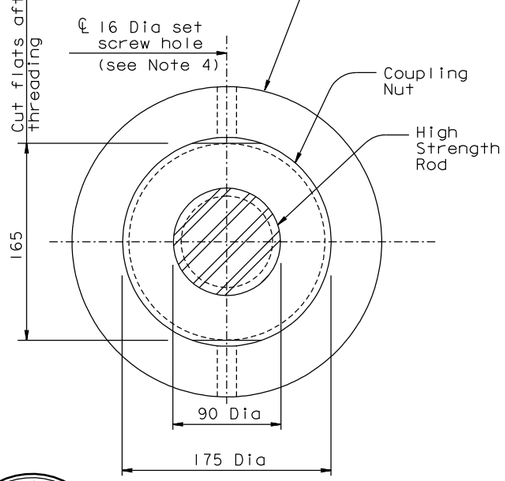

VIEW A-A
1:2.5

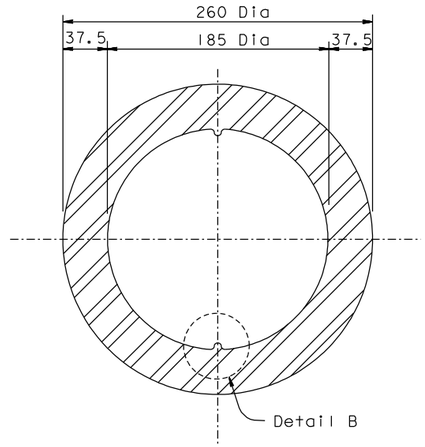

SECTION B-B
1:2.5

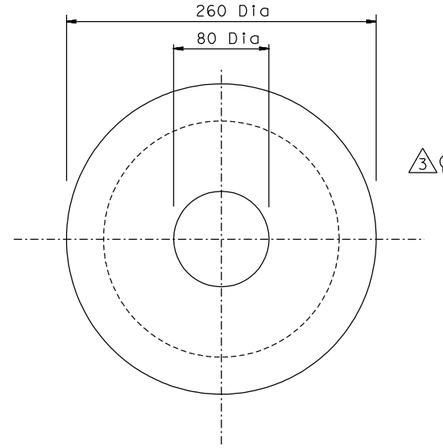

VIEW C-C
1:2.5

NOTES:

1. Coupling nut and socket shall conform to ASTM A194 GR 7, with 4 threads per inch.
2. For main cable strand anchor rod and cable strand socket materials, see "General Notes" sheets.
3. Surface shall be finished to ANSI 500.
4. Provide 16 Dia stainless set screws in threaded hole.
5. All socket dimensions are for information only. The Contractor shall develop socket details consistent with his means and methods and the east cable anchorage geometry, and shall submit them to the Engineer for review and approval. The socket dimensions shall be such that adequate prestressing and erection clearance is provided.
6. Material for bearing blocks shall be ASTM A668 Grade F, or ASTM A148 Grade 550-345.

ALL DIMENSIONS ARE IN MILLIMETERS UNLESS OTHERWISE SHOWN

REGISTERED PROFESSIONAL ENGINEER Daniel J. Turner No. C 65033 Exp. 06/30/11 CIVIL STATE OF CALIFORNIA

FOR REVISIONS ONLY

CONTRACT CHANGE ORDER NO. _____
SHEET ____ OF ____

REQUESTS FOR INFORMATION NOT ADDRESSED IN THIS CCO REMAIN IN FORCE

MARK	DATE	DESCRIPTIONS	BY	CH'D	CCO#
3	04/08/11	SUSPENSION CABLE MISCELLANEOUS DETAILS	DT	GB	185
2	01/28/11	MISCELLANEOUS CABLE SYSTEM DETAILS	DT	GB	37S1
1	08/28/09	BEARING BLOCKS	DT	GB	78

REVISIONS

R. Valizadeh/V. Toan/Y.L./W.L./F.C.
DESIGN OVERSIGHT
Reza Valizadeh / Vong Toan / Y. Liu
SIGN OFF DATE 04/08/11

	BY	CHECKED
DESIGN	G. Baker	J. Kuliki
DETAILS	M. Gulyas	T. McMeans
QUANTITIES	M. Gulyas	M. Roberts

PREPARED FOR THE STATE OF CALIFORNIA DEPARTMENT OF TRANSPORTATION

R. Manzanarez
PROJECT ENGINEER

BRIDGE NO. 34-0006L/R
KILOMETER POST 13.2/13.9

SAN FRANCISCO OAKLAND BAY BRIDGE
EAST SPAN SEISMIC SAFETY PROJECT
SELF-ANCHORED SUSPENSION BRIDGE
(SUPERSTRUCTURE & TOWER)

EAST CABLE ANCHORAGE DETAILS

Rev. Date: 5-18-98

ORIGINAL SCALE IN MILLIMETERS FOR REDUCED PLANS 0 10 20 30 40 50 60 70 80 90 100

CU 04
EA 0120F1

DISREGARD PRINTS BEARING EARLIER REVISION DATES

REVISION DATES (PRELIMINARY STAGE ONLY) 08/07/99 05/31/01 04/08/02 07/01/02 12/19/02

SHEET 320R3 OF

FILE => I:\bb\04-012001\sas\contract plans and cco\cco\cco#185\4-update 04-08-11\dgn\agand08a.dgn

100% PS&E

USERNAME => DWinrow DATE PLOTTED => 07 APR 2011 TIME PLOTTED => 10:11:38

DIST.	COUNTY	ROUTE	KILOMETER POST TOTAL PROJECT	SHEET NO.	TOTAL SHEETS
04	SF	80	13.2/13.9	741SIR1	1204

REGISTERED ENGINEER - CIVIL

02-08-11

PLANS APPROVAL DATE

REGISTERED PROFESSIONAL ENGINEER Marwan N. Nader No. C 054426 Exp. 12/31/13 CIVIL STATE OF CALIFORNIA

The State of California or its officers or agents shall not be responsible for the accuracy or completeness of electronic copies of this plan sheet.

T.Y. LIN / MOFFATT & NICHOL
825 BATTERY STREET
SAN FRANCISCO, CA 94111

Caltrans now has a web site! To get to the web site, go to: http://www.dot.ca.gov

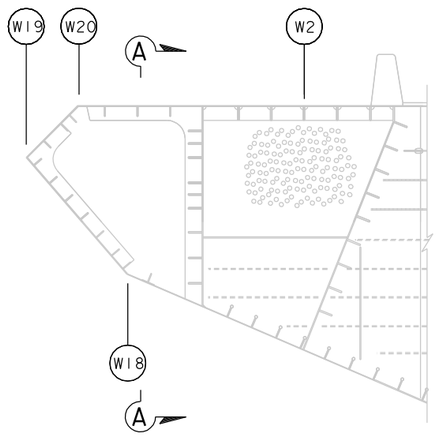

WESTBOUND

PP 120.5

1:50

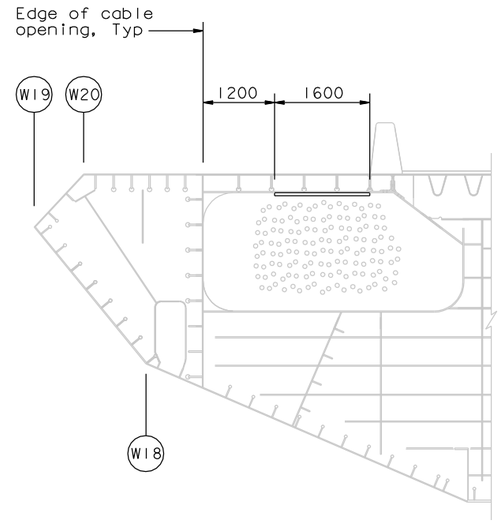

WESTBOUND

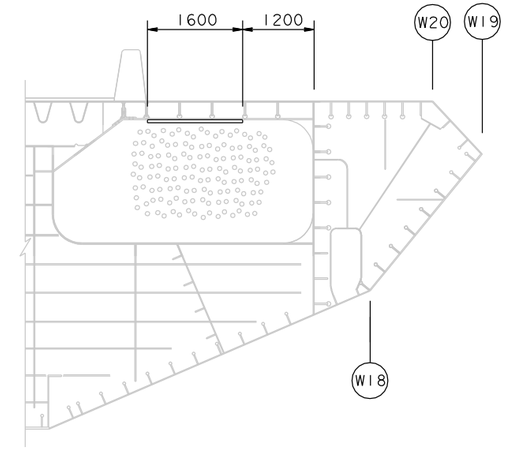

EASTBOUND

PP 121

1:50

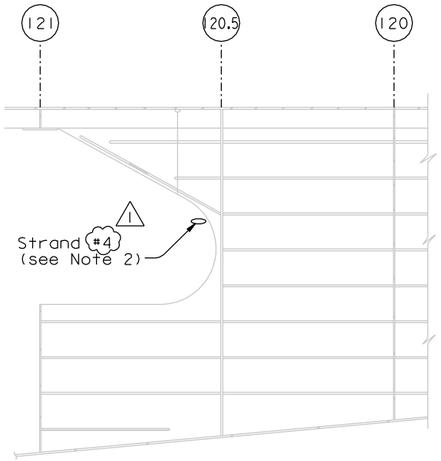

SECTION A-A

1:40

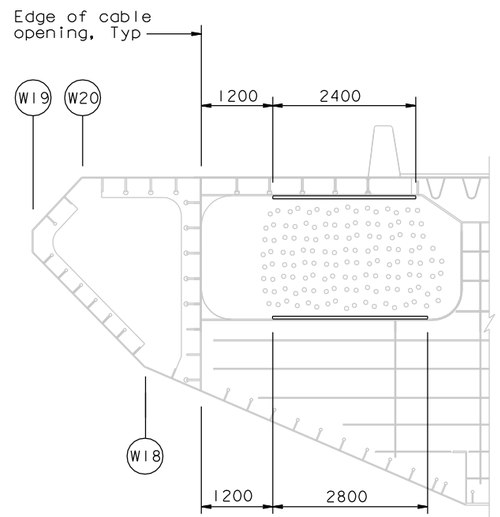

WESTBOUND

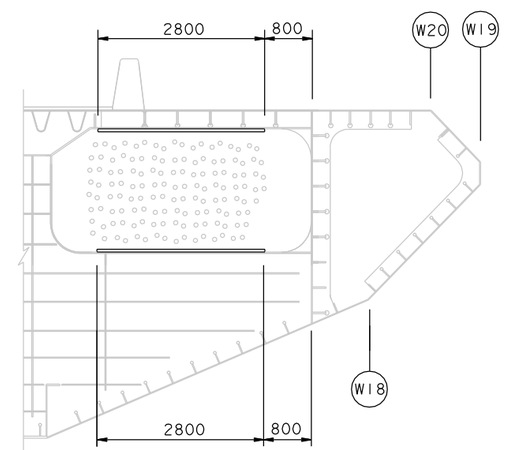

EASTBOUND

PP 121.5

1:50

LEGEND:

- Protective neoprene pad (see Note 1)

NOTES:

1. For details of neoprene pad at cable opening flanges, see "Suspension Cable Miscellaneous Details No. 6" sheet.
2. Strand #4 (1) shall be wrapped in the vicinity of the K plate per the "PWS Strand Sheathing" detail on "Suspension Cable Miscellaneous Details No. 4" sheet.

CONTRACT CHANGE ORDER NO. _____
SHEET ____ OF ____

REQUESTS FOR INFORMATION NOT ADDRESSED IN THIS CCO REMAIN IN FORCE

ALL DIMENSIONS ARE IN MILLIMETERS UNLESS OTHERWISE SHOWN

R. Valizadeh/V. Toan/Y.L./W.L./F.C.
DESIGN OVERSIGHT
Roya Valizadeh / Vonn Toan / Y. Liu
SIGN OFF DATE 02/24/12

MARK	DATE	DESCRIPTIONS	BY	CH'D	CCO#
1	02/24/12	SUSPENSION CABLE MISCELLANEOUS DETAILS	MN	GB	185
0	02/08/11	SUSPENSION CABLE MISCELLANEOUS DETAILS	MN	GB	185

REVISIONS

DESIGN	BY M. Nader	CHECKED G. Baker	
DETAILS	BY D. Turner	CHECKED A. Baumberger	
QUANTITIES	BY D. Turner	CHECKED A. Baumberger	

PREPARED FOR THE STATE OF CALIFORNIA DEPARTMENT OF TRANSPORTATION

R. Manzanarez
PROJECT ENGINEER

BRIDGE NO. 34-0006L/R
KILOMETER POST 13.2/13.9

SAN FRANCISCO OAKLAND BAY BRIDGE
EAST SPAN SEISMIC SAFETY PROJECT
SELF-ANCHORED SUSPENSION BRIDGE
(SUPERSTRUCTURE & TOWER)

SUSPENSION CABLE MISCELLANEOUS DETAILS NO. 1

Rev. Date: 5-18-98

ORIGINAL SCALE IN MILLIMETERS FOR REDUCED PLANS 0 10 20 30 40 50 60 70 80 90 100

CU 04
EA 0120F1

DISREGARD PRINTS BEARING EARLIER REVISION DATES 02/08/11

REVISION DATES (PRELIMINARY STAGE ONLY)

SHEET 324SIR1 OF

FILE => L:\BB\04-012001\SAS\Contract Plans and CCO\CCO\CCO#185\8-Revision 02-24-12\DGN\agsc104a.dgn

100% PS&E

USERNAME => arivera DATE PLOTTED => 24 FEB 2012 TIME PLOTTED => 08:31:40

DIST.	COUNTY	ROUTE	KILOMETER POST TOTAL PROJECT	SHEET NO.	TOTAL SHEETS
04	SF	80	13.2/13.9	741S2	1204

REGISTERED ENGINEER - CIVIL

02-08-11

PLANS APPROVAL DATE

REGISTERED PROFESSIONAL ENGINEER Marwan N. Nader No. C 054426 Exp. 12/31/11 CIVIL STATE OF CALIFORNIA

The State of California or its officers or agents shall not be responsible for the accuracy or completeness of electronic copies of this plan sheet.

T.Y. LIN / MOFFATT & NICHOL
825 BATTERY STREET
SAN FRANCISCO, CA 94111

Caltrans now has a web site! To get to the web site, go to: http://www.dot.ca.gov

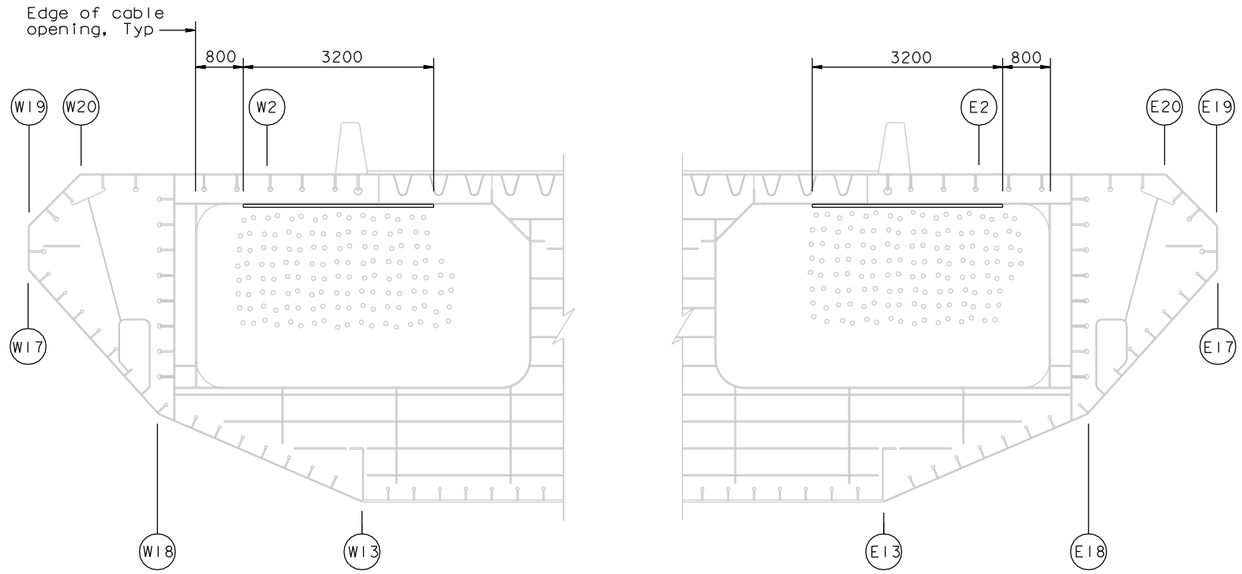

WESTBOUND

EASTBOUND

PP 122
1:50

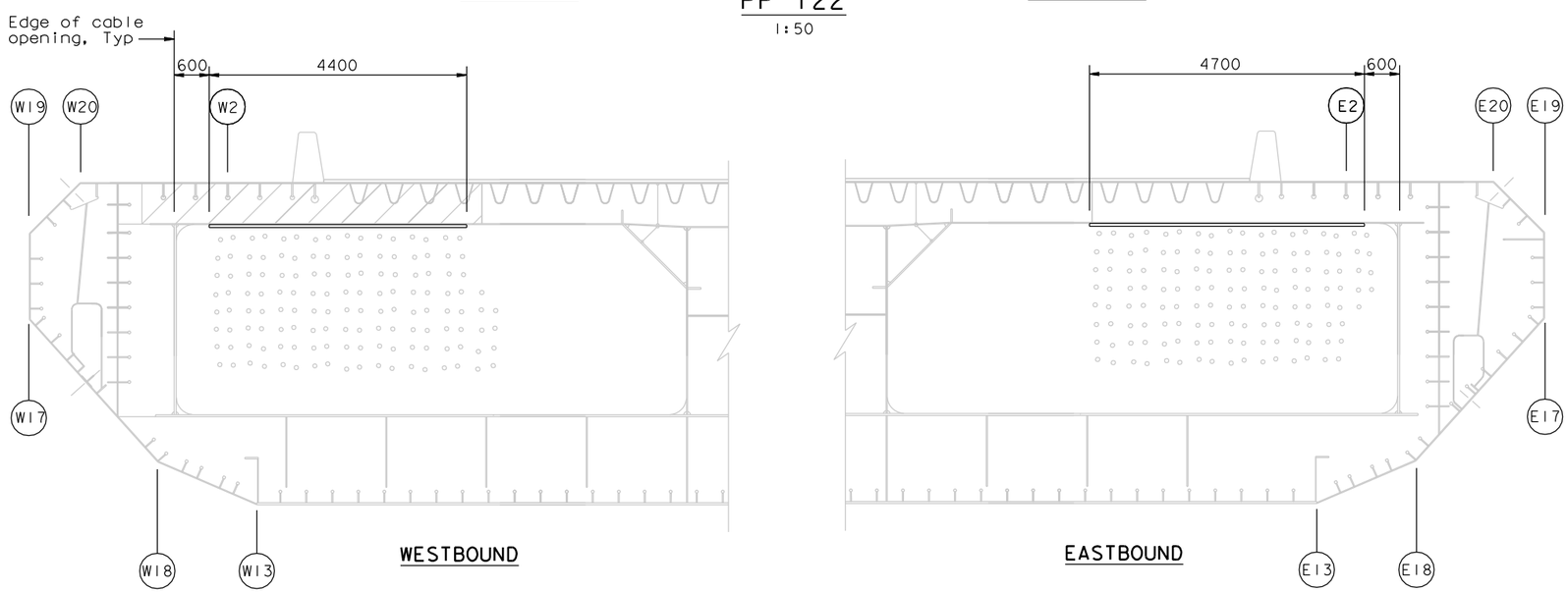

WESTBOUND

EASTBOUND

PP 123
1:50

LEGEND:

- Protective neoprene pad (see Note 1)

NOTES:

1. For details of neoprene pad at cable opening flanges, see "Suspension Cable Miscellaneous Details No.6" sheet.
2. Protection for PWS strands is not required at PP 122.5 (EB & WB).

CONTRACT CHANGE ORDER NO. _____
SHEET ____ OF ____

REQUESTS FOR INFORMATION NOT ADDRESSED IN THIS CCO REMAIN IN FORCE

ALL DIMENSIONS ARE IN MILLIMETERS UNLESS OTHERWISE SHOWN

R. Valizadeh/V. Toan/Y.L./W.L./F.C.
DESIGN OVERSIGHT
SIGN OFF DATE 02/08/11

MARK	DATE	DESCRIPTIONS	BY	CH'D	CCO#
0	02/08/11	SUSPENSION CABLE MISCELLANEOUS DETAILS	MN	GB	185

REVISIONS

DESIGN	BY M. Nader	CHECKED G. Baker	
DETAILS	BY D. Turner	CHECKED A. Baumberger	
QUANTITIES	BY D. Turner	CHECKED A. Baumberger	

PREPARED FOR THE STATE OF CALIFORNIA DEPARTMENT OF TRANSPORTATION

R. Manzanarez
PROJECT ENGINEER

BRIDGE NO. 34-0006L/R
KILOMETER POST 13.2/13.9

SAN FRANCISCO OAKLAND BAY BRIDGE
EAST SPAN SEISMIC SAFETY PROJECT
SELF-ANCHORED SUSPENSION BRIDGE
(SUPERSTRUCTURE & TOWER)

SUSPENSION CABLE MISCELLANEOUS DETAILS NO.2

Rev. Date: 5-18-98

ORIGINAL SCALE IN MILLIMETERS FOR REDUCED PLANS 0 10 20 30 40 50 60 70 80 90 100

CU 04
EA 0120F1

DISREGARD PRINTS BEARING EARLIER REVISION DATES 02/08/11

REVISION DATES (PRELIMINARY STAGE ONLY)

SHEET 324S2 OF

FILE => I:\bb\04-012001\sas\contract plans and cco\cco\cco#185\1-original 02-08-11\dgn\agsc104b.dgn

USERNAME => DWinrow DATE PLOTTED => 08 FEB 2011 TIME PLOTTED => 13:37:54

100 % PS&E

DIST.	COUNTY	ROUTE	KILOMETER POST TOTAL PROJECT	SHEET NO.	TOTAL SHEETS
04	SF	80	13.2/13.9	741S3	1204

REGISTERED ENGINEER - CIVIL

02-08-11

PLANS APPROVAL DATE

REGISTERED PROFESSIONAL ENGINEER Marwan N. Nader No. C 054426 Exp. 12/31/11 CIVIL STATE OF CALIFORNIA

The State of California or its officers or agents shall not be responsible for the accuracy or completeness of electronic copies of this plan sheet.

T.Y. LIN / MOFFATT & NICHOL
825 BATTERY STREET
SAN FRANCISCO, CA 94111

Caltrans now has a web site! To get to the web site, go to: http://www.dot.ca.gov

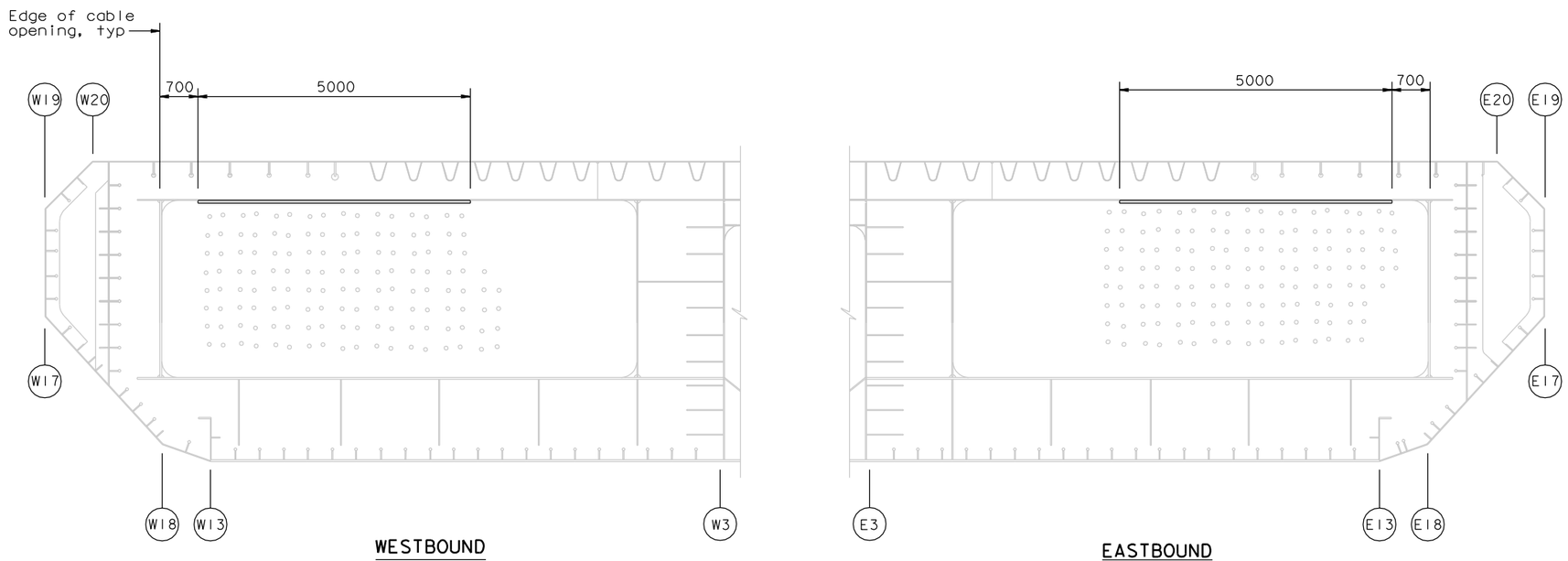

PP 123.5
1:50

LEGEND:

▭ - Protective neoprene pad (see Note 1)

NOTES:

1. For details of neoprene pad at cable opening flanges, see "Suspension Cable Miscellaneous Details No.6" sheet.
2. Protection for PWS strands is not required at PPs 124 & 124.5 (EB & WB).

100% PS&E

CONTRACT CHANGE ORDER NO. ____
SHEET ___ OF ___

REQUESTS FOR INFORMATION NOT ADDRESSED IN THIS CCO REMAIN IN FORCE

ALL DIMENSIONS ARE IN MILLIMETERS UNLESS OTHERWISE SHOWN

R. Valizadeh/V. Toan/Y.L./W.L./F.C.
DESIGN OVERSIGHT
SIGN OFF DATE 02/08/11

MARK	DATE	DESCRIPTIONS	BY	CH'D	CCO#
0	02/08/11	SUSPENSION CABLE MISCELLANEOUS DETAILS	MN	GB	185

REVISIONS

	BY	CHECKED
DESIGN	M. Nader	G. Baker
DETAILS	D. Turner	A. Baumberger
QUANTITIES	D. Turner	A. Baumberger

PREPARED FOR THE STATE OF CALIFORNIA DEPARTMENT OF TRANSPORTATION

R. Manzanarez
PROJECT ENGINEER

BRIDGE NO. 34-0006L/R
KILOMETER POST 13.2/13.9

SAN FRANCISCO OAKLAND BAY BRIDGE
EAST SPAN SEISMIC SAFETY PROJECT
SELF-ANCHORED SUSPENSION BRIDGE
(SUPERSTRUCTURE & TOWER)

SUSPENSION CABLE MISCELLANEOUS DETAILS NO.3

Rev. Date: 5-18-98

ORIGINAL SCALE IN MILLIMETERS FOR REDUCED PLANS 0 10 20 30 40 50 60 70 80 90 100

CU 04
EA 0120F1

DISREGARD PRINTS BEARING EARLIER REVISION DATES → 02/08/11

REVISION DATES (PRELIMINARY STAGE ONLY)

SHEET 324S3 OF

FILE => I:\bb\04-012001\sas\contract plans and cco\cco\cco#185\1-original 02-08-11\dgn\agsc104c.dgn

USERNAME => DWinrow DATE PLOTTED => 08 FEB 2011 TIME PLOTTED => 13:38:32

DIST.	COUNTY	ROUTE	KILOMETER POST TOTAL PROJECT	SHEET NO.	TOTAL SHEETS
04	SF	80	13.2/13.9	741S4R2	1204

REGISTERED ENGINEER - CIVIL

03-25-11
PLANS APPROVAL DATE

REGISTERED PROFESSIONAL ENGINEER Marwan N. Nader No. C 054426 Exp. 12/31/13 CIVIL STATE OF CALIFORNIA

The State of California or its officers or agents shall not be responsible for the accuracy or completeness of electronic copies of this plan sheet.

T.Y. LIN / MOFFATT & NICHOL
825 BATTERY STREET
SAN FRANCISCO, CA 94111

Caltrans now has a web site! To get to the web site, go to: http://www.dot.ca.gov

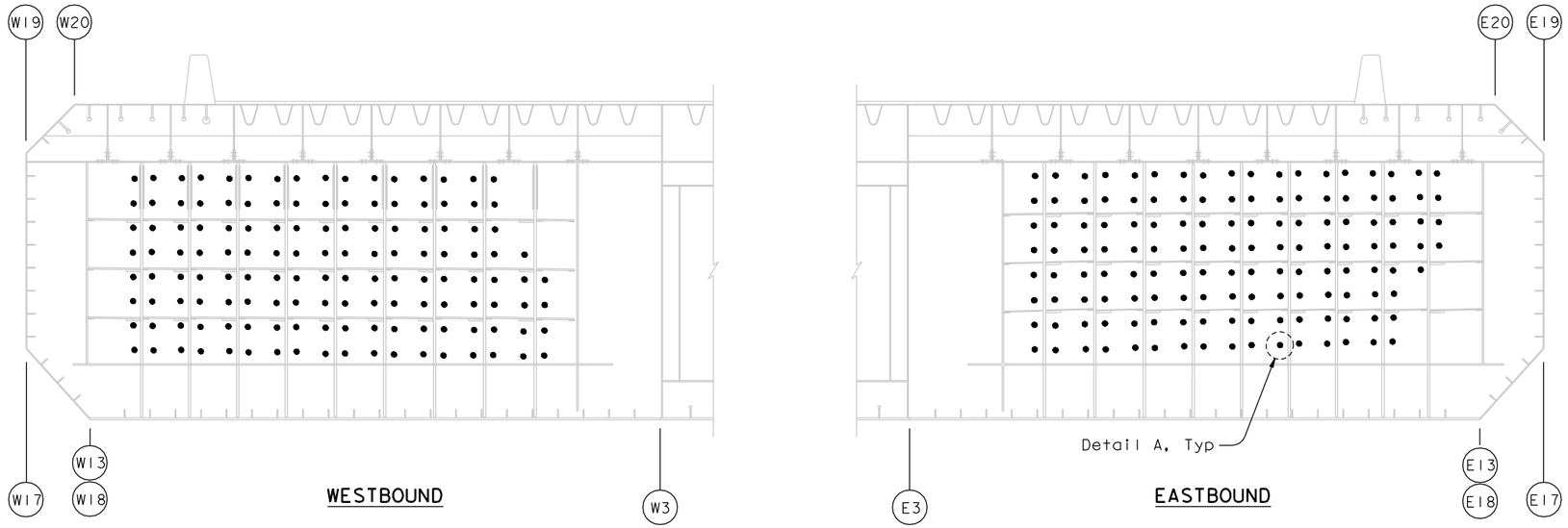

PP 125
1:50

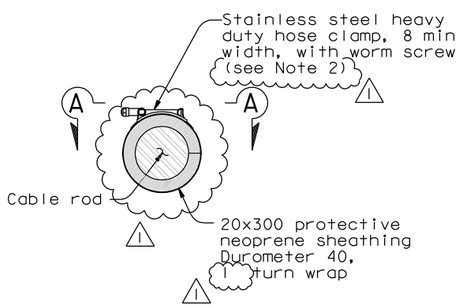

DETAIL A
1:5

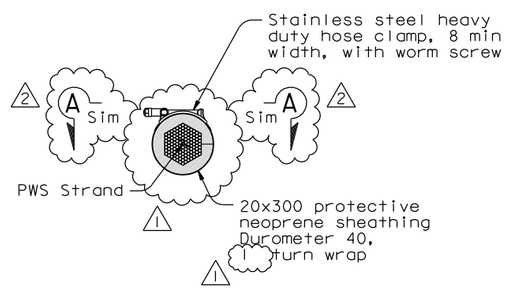

PWS STRAND SHEATHING
1:5

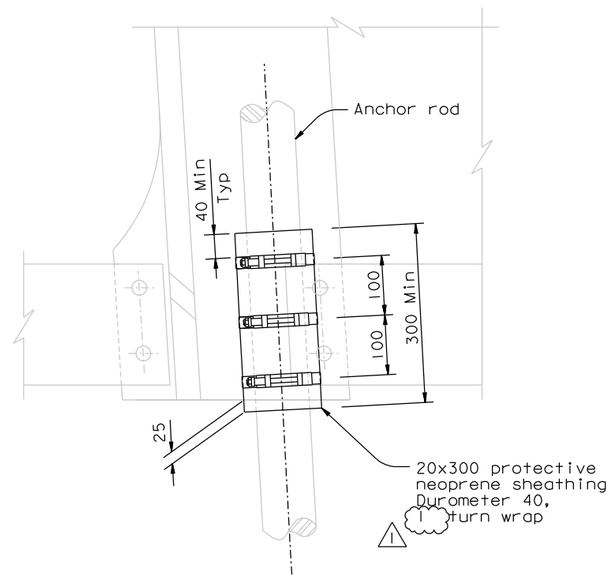

VIEW A-A (See Note 3)
1:5

NOTES:

1. The Contractor shall provide twenty spare protective neoprene sheathing wraps to be installed as directed by the Engineer.
2. The worm screw shall be oriented so as to avoid nearest obstructions.
3. For PWS Strand Sheathing, the center hose clamp may be omitted.

CONTRACT CHANGE ORDER NO. _____
SHEET ____ OF ____

REQUESTS FOR INFORMATION NOT ADDRESSED IN THIS CCO REMAIN IN FORCE

MARK	DATE	DESCRIPTIONS	BY	CH'D	CCO#
2	02/24/12	SUSPENSION CABLE MISCELLANEOUS DETAILS	MN	GB	185
1	12/22/11	SUSPENSION CABLE MISCELLANEOUS DETAILS	MN	GB	185
0	03/25/11	SUSPENSION CABLE MISCELLANEOUS DETAILS	MN	GB	185

REVISIONS

R. Valizadeh/V. Toan/Y.L./W.L./F.C.
DESIGN OVERSIGHT
SIGN OFF DATE 02/24/12

	BY	CHECKED
DESIGN	M. Nader	G. Baker
DETAILS	D. Turner	A. Baumberger
QUANTITIES	D. Turner	A. Baumberger

PREPARED FOR THE STATE OF CALIFORNIA DEPARTMENT OF TRANSPORTATION

ALL DIMENSIONS ARE IN MILLIMETERS UNLESS OTHERWISE SHOWN

R. Manzanarez
PROJECT ENGINEER

BRIDGE NO. 34-0006L/R
KILOMETER POST 13.2/13.9

SAN FRANCISCO OAKLAND BAY BRIDGE
EAST SPAN SEISMIC SAFETY PROJECT
SELF-ANCHORED SUSPENSION BRIDGE
(SUPERSTRUCTURE & TOWER)

SUSPENSION CABLE MISCELLANEOUS DETAILS NO. 4

Rev. Date: 5-18-98

ORIGINAL SCALE IN MILLIMETERS FOR REDUCED PLANS 0 10 20 30 40 50 60 70 80 90 100

CU 04
EA 0120F1

DISREGARD PRINTS BEARING EARLIER REVISION DATES 03/25/11

REVISION DATES (PRELIMINARY STAGE ONLY)

SHEET 324S4R2 OF

FILE => L:\BB\04-012001\SAS\Contract Plans and CCO\CCO\CCO#185\8-Revision 02-24-12\DGN\agsc104d.dgn

100% PS&E

USERNAME => arivera DATE PLOTTED => 24 FEB 2012 TIME PLOTTED => 08:30:27

DIST.	COUNTY	ROUTE	KILOMETER POST TOTAL PROJECT	SHEET NO.	TOTAL SHEETS
04	SF	80	13.2/13.9	741S5	1204

REGISTERED ENGINEER - CIVIL

02-08-11

PLANS APPROVAL DATE

REGISTERED PROFESSIONAL ENGINEER Marwan N. Nader No. C 054426 Exp. 12/31/11 CIVIL STATE OF CALIFORNIA

The State of California or its officers or agents shall not be responsible for the accuracy or completeness of electronic copies of this plan sheet.

T.Y. LIN / MOFFATT & NICHOL
825 BATTERY STREET
SAN FRANCISCO, CA 94111

Caltrans now has a web site! To get to the web site, go to: http://www.dot.ca.gov

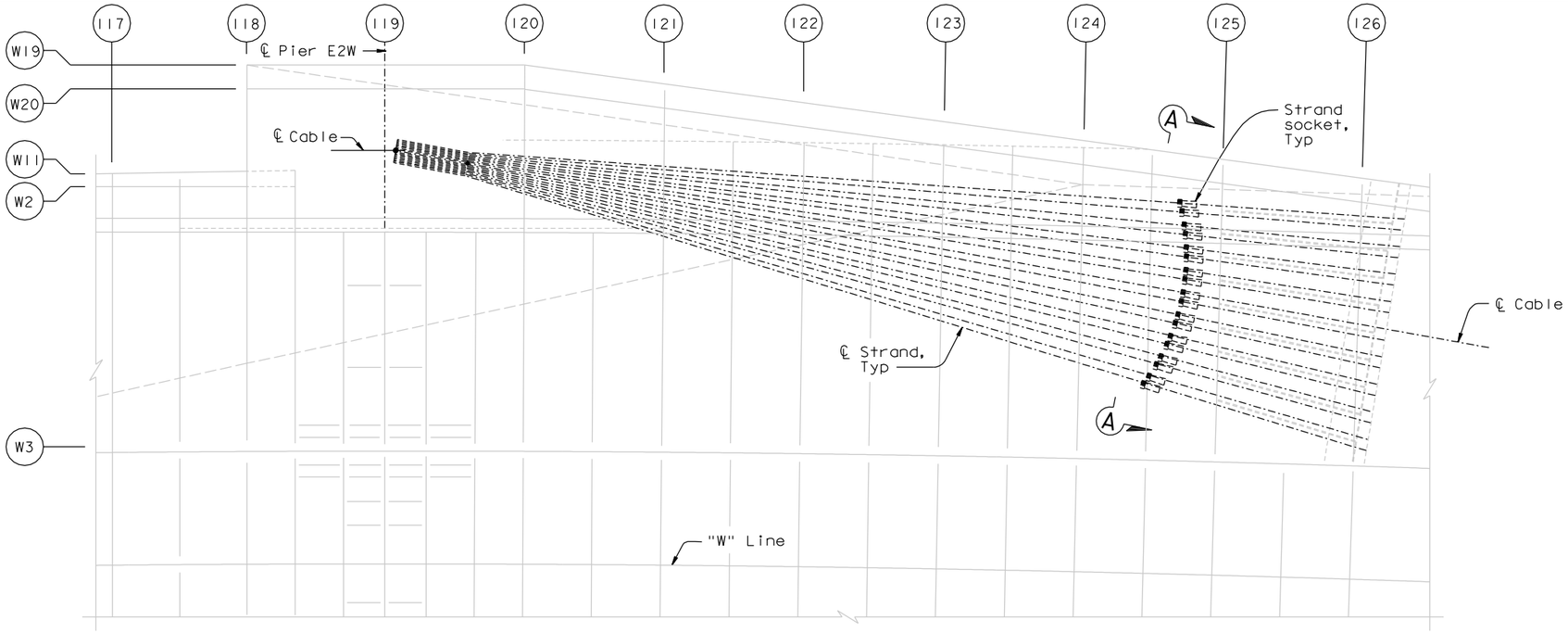

CABLE PLAN AT EAST END - "W" LINE

1:100

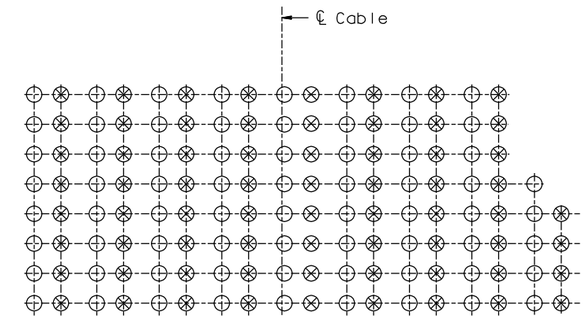

SECTION A-A

1:50

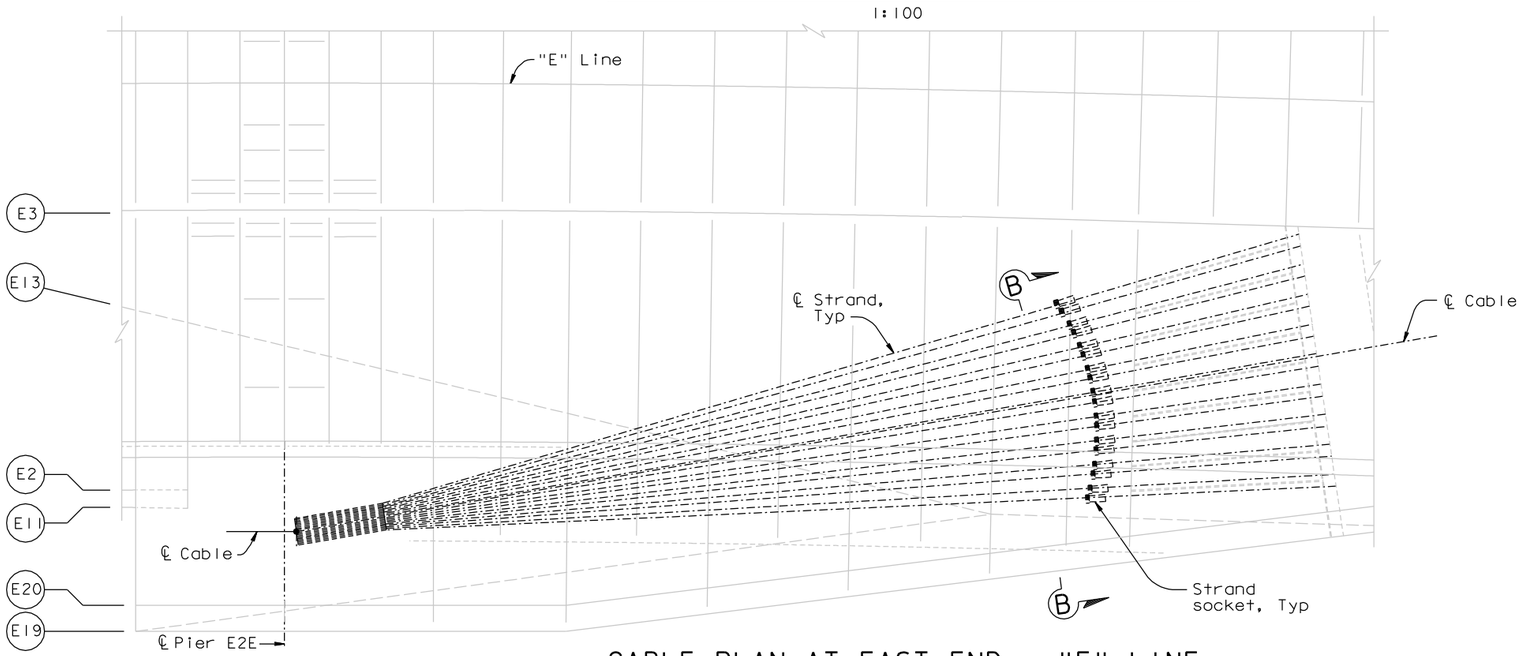

CABLE PLAN AT EAST END - "E" LINE

1:100

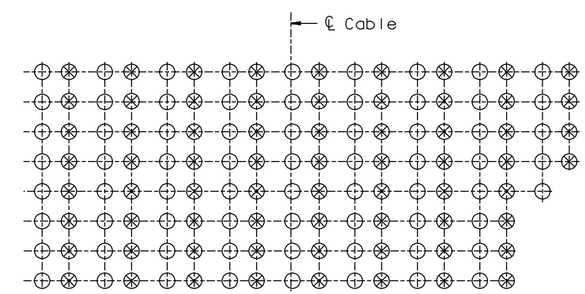

SECTION B-B

1:50

LEGEND:

○ - Socket w/o neoprene wrap

⊗ - Socket w/ neoprene wrap (see Note 1)

NOTES:

1. For neoprene wrap details, see "Suspension Cable Miscellaneous Details No.6" sheet.

CONTRACT CHANGE ORDER NO. _____
SHEET ___ OF ___

REQUESTS FOR INFORMATION NOT ADDRESSED IN THIS CCO REMAIN IN FORCE

ALL DIMENSIONS ARE IN MILLIMETERS UNLESS OTHERWISE SHOWN

R. Valizadeh/V. Toan/Y.L./W.L./F.C.
DESIGN OVERSIGHT
SIGN OFF DATE 02/08/11

MARK	DATE	DESCRIPTIONS	BY	CH'D	CCO#
0	02/08/11	SUSPENSION CABLE MISCELLANEOUS DETAILS	MN	GB	185

REVISIONS

	BY	CHECKED
DESIGN	M. Nader	G. Baker
DETAILS	D. Turner	A. Baumberger
QUANTITIES	D. Turner	A. Baumberger

PREPARED FOR THE STATE OF CALIFORNIA DEPARTMENT OF TRANSPORTATION

R. Manzanarez
PROJECT ENGINEER

BRIDGE NO. 34-0006L/R
KILOMETER POST 13.2/13.9

SAN FRANCISCO OAKLAND BAY BRIDGE
EAST SPAN SEISMIC SAFETY PROJECT
SELF-ANCHORED SUSPENSION BRIDGE
(SUPERSTRUCTURE & TOWER)

SUSPENSION CABLE MISCELLANEOUS DETAILS NO.5

Rev. Date: 5-18-98

ORIGINAL SCALE IN MILLIMETERS FOR REDUCED PLANS 0 10 20 30 40 50 60 70 80 90 100

CU 04
EA 0120F1

DISREGARD PRINTS BEARING EARLIER REVISION DATES 02/08/11

REVISION DATES (PRELIMINARY STAGE ONLY)

SHEET 324S5 OF

FILE => I:\bb\04-012001\sas\contract plans and cco\cco\cco#185\1-original 02-08-11\dgn\agsc104e.dgn

100% PS&E

USERNAME => DWinrow DATE PLOTTED => 08 FEB 2011 TIME PLOTTED => 13:41:52

DIST.	COUNTY	ROUTE	KILOMETER POST TOTAL PROJECT	SHEET NO.	TOTAL SHEETS
04	SF	80	13.2/13.9	741S6	1204

REGISTERED ENGINEER - CIVIL

03-25-11

PLANS APPROVAL DATE

REGISTERED PROFESSIONAL ENGINEER Marwan N. Nader No. C 054426 Exp. 12/31/11 CIVIL STATE OF CALIFORNIA

The State of California or its officers or agents shall not be responsible for the accuracy or completeness of electronic copies of this plan sheet.

T.Y. LIN / MOFFATT & NICHOL
825 BATTERY STREET
SAN FRANCISCO, CA 94111

Caltrans now has a web site! To get to the web site, go to: http://www.dot.ca.gov

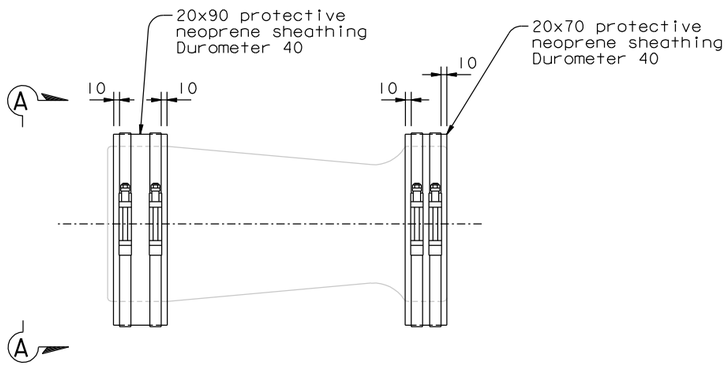

SOCKET WITH NEOPRENE WRAP
1:5

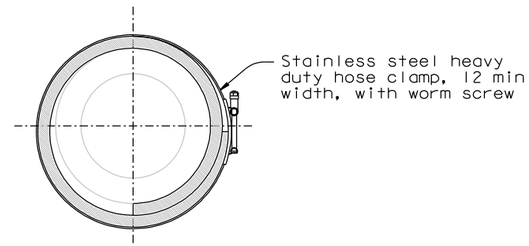

VIEW A-A
1:5

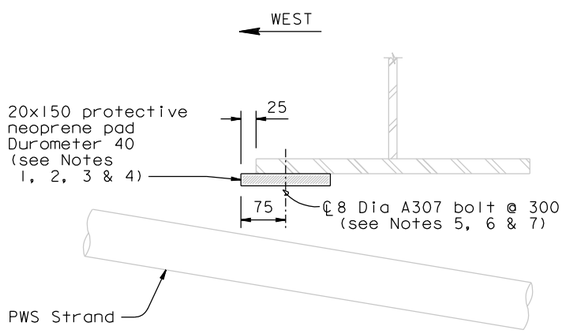

SECTION @ TOP OF CABLE OPENING
1:5

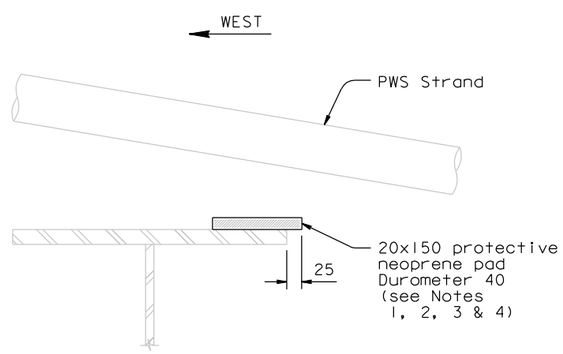

SECTION @ BOTTOM OF CABLE OPENING
1:5

NOTES:

1. Neoprene pad shall be installed prior to free hanging cable installation.
2. At the Contractor's option, the neoprene pad may be installed in segments. A maximum gap of 5 mm is allowable between segments.
3. The Contractor shall provide bonding material and installation procedure for review and approval of the Engineer.
4. The Contractor shall use Chemco Systems CCS grout, Dowel/ Rebar/ Bolt/ LWL, or equivalent, to bond the neoprene pad to the flange.
5. Bolts shall be installed with head on the strand side of the flange, with a 20 Dia washer under the bolt head.
6. Bolts shall be installed snug tight + ½ turn.
7. Nuts shall be installed with thread locking compound.

CONTRACT CHANGE ORDER NO. ____
SHEET ___ OF ___

REQUESTS FOR INFORMATION NOT ADDRESSED IN THIS CCO REMAIN IN FORCE

ALL DIMENSIONS ARE IN MILLIMETERS UNLESS OTHERWISE SHOWN

R. Valizadeh/V. Toan/Y.L./W.L./F.C.
DESIGN OVERSIGHT
SIGN OFF DATE 03/25/11

MARK	DATE	DESCRIPTIONS	BY	CH'D	CCO#
0	03/25/11	SUSPENSION CABLE MISCELLANEOUS DETAILS	MN	GB	185

REVISIONS

DESIGN	BY M. Nader	CHECKED G. Baker	
DETAILS	BY D. Turner	CHECKED A. Baumberger	
QUANTITIES	BY D. Turner	CHECKED A. Baumberger	

PREPARED FOR THE STATE OF CALIFORNIA DEPARTMENT OF TRANSPORTATION

R. Manzanarez
PROJECT ENGINEER

BRIDGE NO. 34-0006L/R
KILOMETER POST 13.2/13.9

SAN FRANCISCO OAKLAND BAY BRIDGE
EAST SPAN SEISMIC SAFETY PROJECT
SELF-ANCHORED SUSPENSION BRIDGE
(SUPERSTRUCTURE & TOWER)

SUSPENSION CABLE MISCELLANEOUS DETAILS NO. 6

Rev. Date: 5-18-98

ORIGINAL SCALE IN MILLIMETERS FOR REDUCED PLANS 0 10 20 30 40 50 60 70 80 90 100

CU 04
EA 0120F1

DISREGARD PRINTS BEARING EARLIER REVISION DATES

REVISION DATES (PRELIMINARY STAGE ONLY) 03/25/11

SHEET 324S6 OF

FILE => I:\bb\04-012001\sas\contract plans and cco\cco\cco*185\3-revision 03-25-11\dgn\agsc104f.dgn

100% PS&E

USERNAME => DWinrow DATE PLOTTED => 25 MAR 2011 TIME PLOTTED => 08:53:55

DIST.	COUNTY	ROUTE	KILOMETER POST TOTAL PROJECT	SHEET NO.	TOTAL SHEETS
04	SF	80	13.2/13.9	760R1	1204

Caltrans Metric

George Baker
REGISTERED ENGINEER - CIVIL
12-6-04
PLANS APPROVAL DATE

REGISTERED PROFESSIONAL ENGINEER George S. Baker No. C57112 Exp. 12/31/05 CIVIL STATE OF CALIFORNIA

The State of California or its officers or agents shall not be responsible for the accuracy or completeness of electronic copies of this plan sheet.

T.Y. LIN / MOFFATT & NICHOL
825 BATTERY STREET
SAN FRANCISCO, CA 94111

Caltrans now has a web site! To get to the web site, go to: http://www.dot.ca.gov

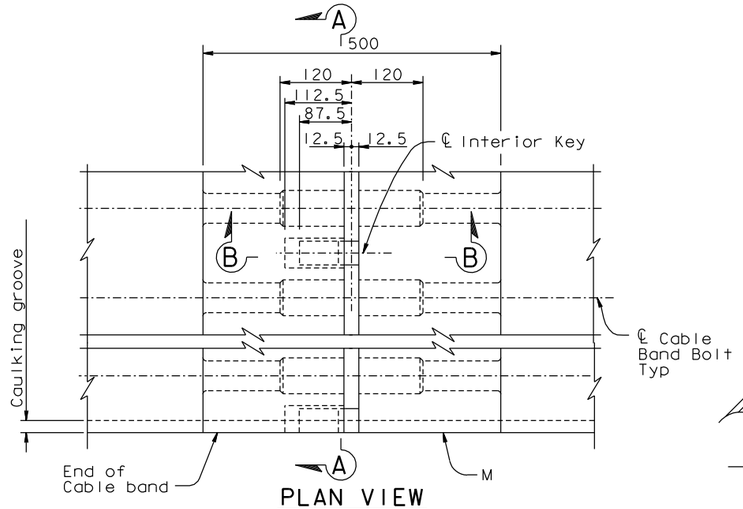

PLAN VIEW

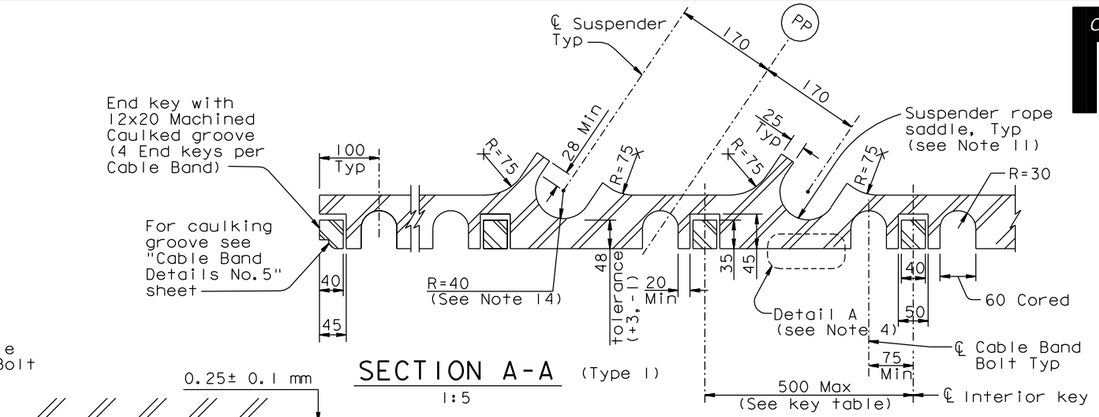

SECTION A-A (Type 1)
1:5

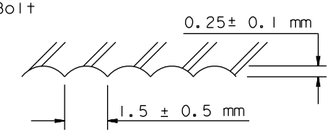

DETAIL A

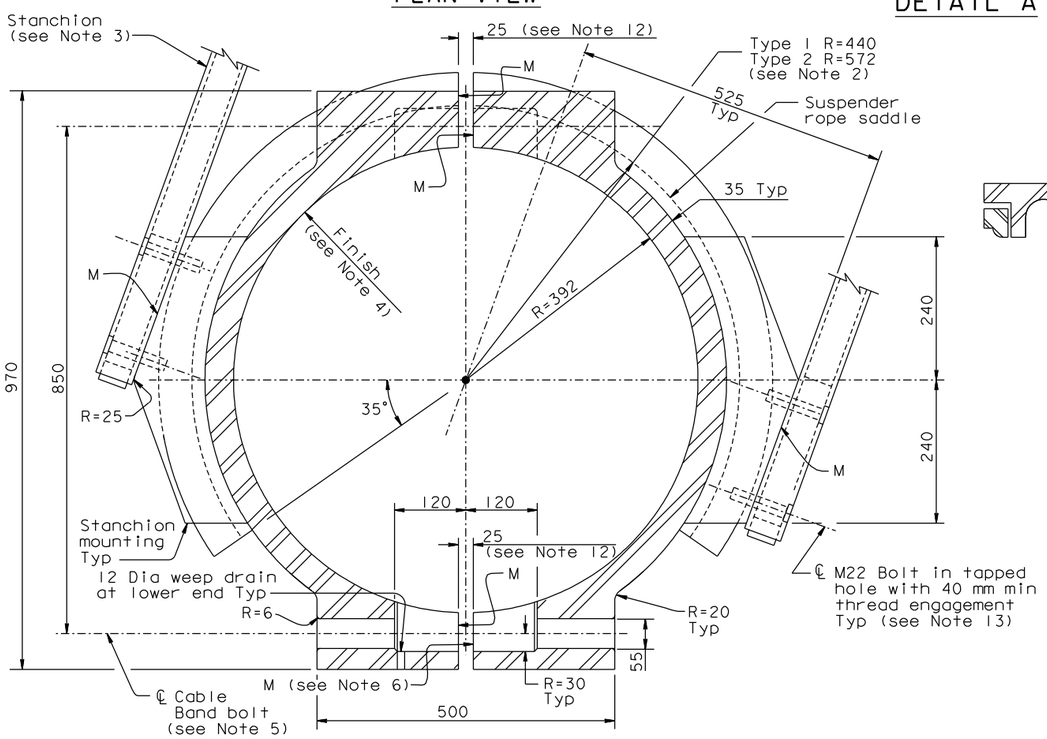

SECTION

TYPICAL CABLE BAND DETAIL
1:5

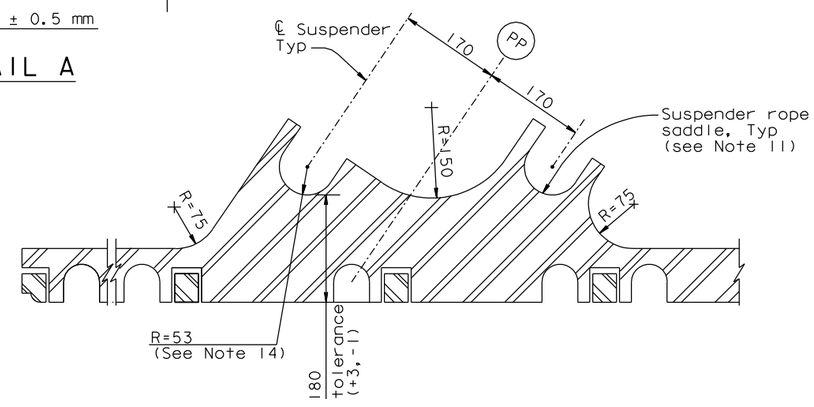

SECTION A-A (Type 2)
1:5
For details not shown, see Type 1

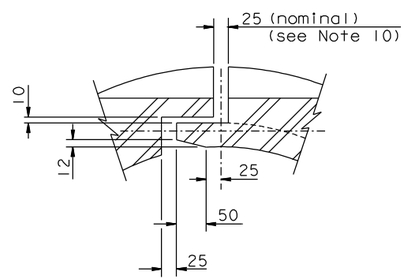

JOINT AT KEY

SECTION B-B
1:5

KEY TABLE	
Cable Band Type	No of Interior Keys
1	2
2	2
3	2
4	4
5	6
6	6
7	6
8	8
9	8
10	10
11	10
13	12
14	6
15	2
16	2

NOTES:

1. For cable band types B14 and B15, see "Cable Band Details No.4" sheet.
2. For location of suspender types 1 and 2, see "Suspender Layout No.1" sheet.
3. Stanchions and other handrope fittings shall be connected to stanchion mounting. Bolt holes shall be provided in stanchion mounting as required. For handrope stanchions and fittings, see "Cable Handrope Details" sheets.
4. Cable band bore shall be finished with 650 cuts per meter with depth of 0.25 mm at right angles to the cable axis, as shown in Detail A.
5. For cable band bolts, see "Cable Band Details No.5" sheet. For materials of cable and bolts, see the "General Notes" sheets.
6. All surfaces identified with the letter "M" shall be spacially placed in the plane identified, within 2 mm. These surfaces shall not deviate in flatness from the specified plane more than ±0.0015 times the length over which the flatness is measured. Surface roughness of exterior surfaces with no machining shall be finished to ANSI 1000.
7. Surfaces where bolt heads or nuts bear shall have a surface roughness finished to ANSI 500.
8. Cored surfaces need not be machined, but shall be spacially located within ±2 mm of their prescribed location. The "Cored" radius tolerance shall be +2 mm. Cored roughness shall be finished to ANSI 1000.
9. Length difference between split halves shall be ±1 mm.
10. Difference along length of longitudinal gap as erected shall be ±1.5 mm per meter.
11. Surface roughness of suspender rope saddle grooves shall be ANSI 500. These surfaces shall be metallized with coating thickness not less than 0.4 mm.
12. The full depth of the opening between the cable band halves shall be sealed. For sealing details, see "Cable Band Details No.3A" sheet. The top opening shall be fully sealed. The bottom opening shall be fully sealed, except as shown in the Lower End Caulking Detail, see "Cable Band Details No.5" sheet.
13. All stanchion mountings shall be drilled and tapped in positions shown. Where stanchions are not used holes shall be filled with M22 bolts.
14. The Contractor shall size the suspender rope saddles to fit the actual installed rope sizes.

REGISTERED PROFESSIONAL ENGINEER Marwan N. Nader No. C 054426 Exp. 12/31/11 CIVIL STATE OF CALIFORNIA

FOR REVISIONS ONLY

CONTRACT CHANGE ORDER NO. _____
SHEET ____ OF ____

REQUESTS FOR INFORMATION NOT ADDRESSED IN THIS CCO REMAIN IN FORCE

ALL DIMENSIONS ARE IN MILLIMETERS UNLESS OTHERWISE SHOWN

R. Valizadeh/V. Toan/Y.L./W.L./F.C.
DESIGN OVERSIGHT
Rza Valizadeh / Vong Toan / Y. Liu
SIGN OFF DATE 07/15/11

MARK	DATE	DESCRIPTIONS	BY	CH'D	CCO#
1	07/15/11	SUSPENSION CABLE MISCELLANEOUS DETAILS	GB	MN	185

REVISIONS

	BY	CHECKED
DESIGN	G. Baker	T. McMeans
DETAILS	S. Camo	P. Ritchie
QUANTITIES	C. Mauch	C. Mibelli

PREPARED FOR THE STATE OF CALIFORNIA DEPARTMENT OF TRANSPORTATION

R. Manzanarez
PROJECT ENGINEER

BRIDGE NO. 34-0006L/R
KILOMETER POST 13.2/13.9

SAN FRANCISCO OAKLAND BAY BRIDGE
EAST SPAN SEISMIC SAFETY PROJECT
SELF-ANCHORED SUSPENSION BRIDGE
(SUPERSTRUCTURE & TOWER)

CABLE BAND DETAILS NO.3

Rev. Date: 5-18-98

ORIGINAL SCALE IN MILLIMETERS FOR REDUCED PLANS 0 10 20 30 40 50 60 70 80 90 100

CU 04
EA 0120F1

DISREGARD PRINTS BEARING EARLIER REVISION DATES 01/15/99 05/15/99 08/02/99 05/31/01 04/08/02 07/01/02 12/19/02

SHEET 343R1 OF

FILE => I:\bb\04-012001\sas\contract plans and cco\cco\cco#185\5-update 07-15-11\dgn\agcbd03.dgn

USERNAME => DWinrow DATE PLOTTED => 15 JUL 2011 TIME PLOTTED => 13:45:27

100 % PS&E

DIST.	COUNTY	ROUTE	KILOMETER POST TOTAL PROJECT	SHEET NO.	TOTAL SHEETS
04	SF	80	13.2/13.9	760S1	1204

REGISTERED ENGINEER - CIVIL

07-15-11

PLANS APPROVAL DATE

REGISTERED PROFESSIONAL ENGINEER Marwan N. Nader No. C 054426 Exp. 12/31/11 CIVIL STATE OF CALIFORNIA

The State of California or its officers or agents shall not be responsible for the accuracy or completeness of electronic copies of this plan sheet.

T.Y. LIN / MOFFATT & NICHOL
825 BATTERY STREET
SAN FRANCISCO, CA 94111

Caltrans now has a web site! To get to the web site, go to: http://www.dot.ca.gov

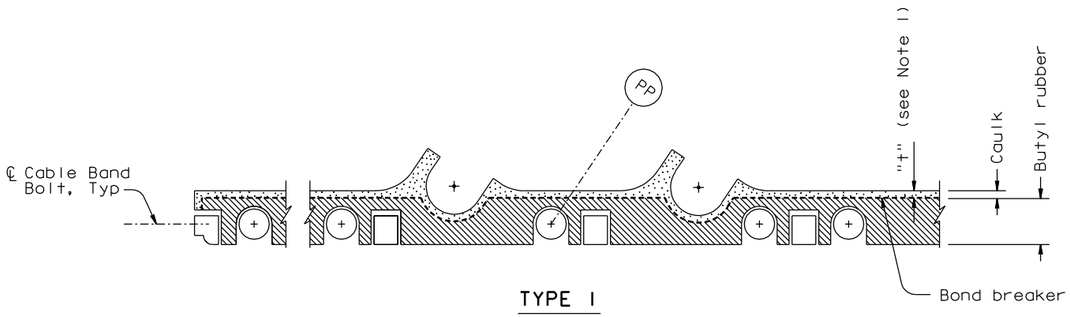

TYPE 1

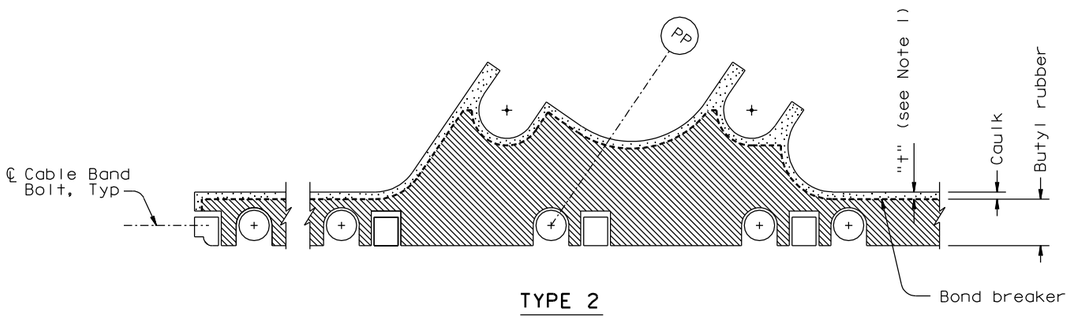

TYPE 2

SEALING DETAILS
1:5

(Top shown; Bottom similar)

LEGEND:

- Caulk
- Butyl Rubber
- Bond Breaker

NOTES:

1. Thickness of caulk shall be in accordance with manufacturer's recommendations.
2. Butyl rubber shall be the same product as used in the cable band caulking groove unless otherwise approved by the Engineer. Butyl rubber shall be applied in accordance with the manufacturer's recommendations.

CONTRACT CHANGE ORDER NO. ____
SHEET ___ OF ___

REQUESTS FOR INFORMATION NOT ADDRESSED IN THIS CCO REMAIN IN FORCE

ALL DIMENSIONS ARE IN MILLIMETERS UNLESS OTHERWISE SHOWN

R. Valizadeh/V. Toan/Y.L./W.L./F.C.
DESIGN OVERSIGHT
SIGN OFF DATE 07/15/11

MARK	DATE	DESCRIPTIONS	BY	CH'D	CCO#
0	07/15/11	SUSPENSION CABLE MISCELLANEOUS DETAILS	GB	MN	185

REVISIONS

	BY	CHECKED
DESIGN	G. Baker	M. Nader
DETAILS	J. Duxbury	M. Nader
QUANTITIES	J. Duxbury	M. Nader

PREPARED FOR THE STATE OF CALIFORNIA DEPARTMENT OF TRANSPORTATION

R. Manzanarez
PROJECT ENGINEER

BRIDGE NO. 34-0006L/R
KILOMETER POST 13.2/13.9

SAN FRANCISCO OAKLAND BAY BRIDGE
EAST SPAN SEISMIC SAFETY PROJECT
SELF-ANCHORED SUSPENSION BRIDGE
(SUPERSTRUCTURE & TOWER)

CABLE BAND DETAILS NO. 3A

Rev. Date: 5-18-98

ORIGINAL SCALE IN MILLIMETERS FOR REDUCED PLANS 0 10 20 30 40 50 60 70 80 90 100

CU 04
EA 0120F1

DISREGARD PRINTS BEARING EARLIER REVISION DATES 07/15/11

REVISION DATES (PRELIMINARY STAGE ONLY)

SHEET 343S1 OF

FILE => I:\bb\04-012001\sas\contract plans and cco\cco\cco#185\5-update 07-15-11\dgn\agcbd03a.dgn

USERNAME => DWinrow DATE PLOTTED => 15 JUL 2011 TIME PLOTTED => 13:43:56

100% PS&E

DIST.	COUNTY	ROUTE	KILOMETER POST TOTAL PROJECT	SHEET NO.	TOTAL SHEETS
04	SF	80	13.2/13.9	764R2	1204

Caltrans Metric

George Baker
REGISTERED ENGINEER - CIVIL
12-6-04
PLANS APPROVAL DATE

REGISTERED PROFESSIONAL ENGINEER George S. Baker No. C 57112 Exp. 12/31/05 CIVIL STATE OF CALIFORNIA

The State of California or its officers or agents shall not be responsible for the accuracy or completeness of electronic copies of this plan sheet.

T.Y. LIN / MOFFATT & NICHOL
825 BATTERY STREET
SAN FRANCISCO, CA 94111

Caltrans now has a web site! To get to the web site, go to: http://www.dot.ca.gov

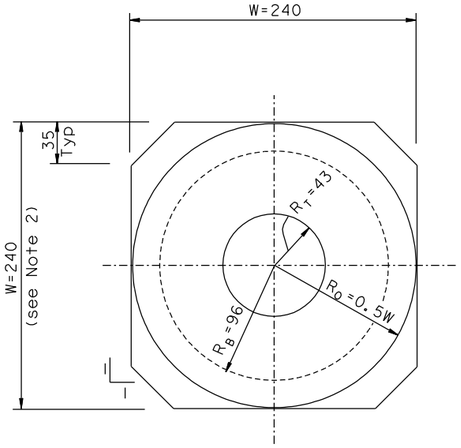

PLAN VIEW
1:2.5

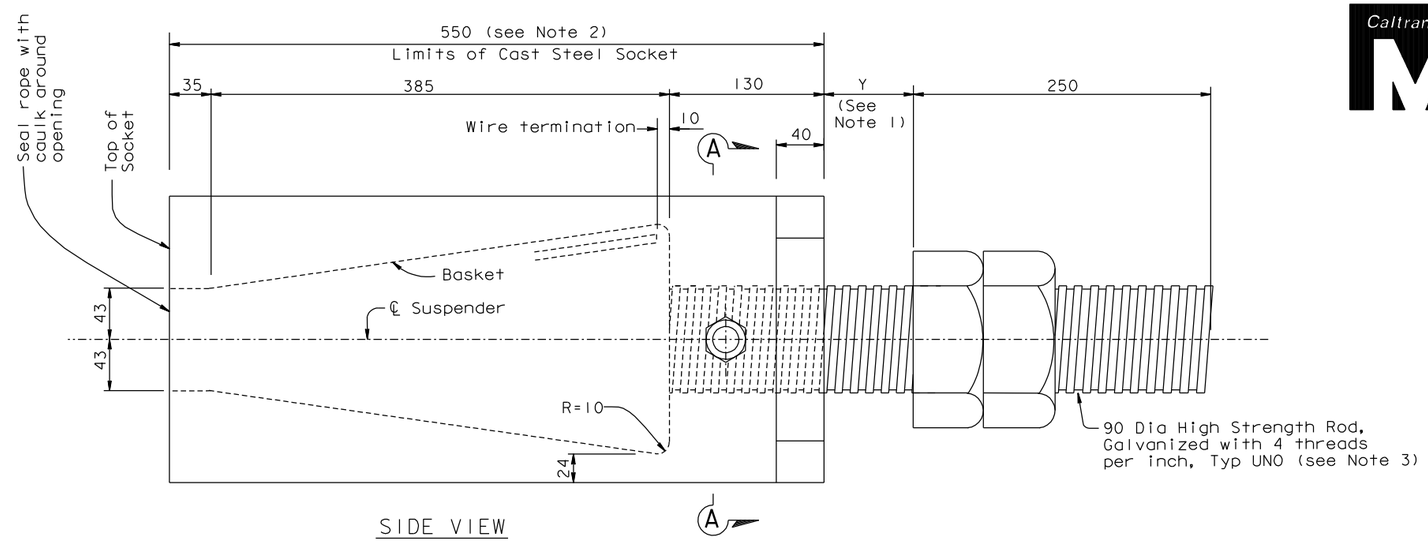

SIDE VIEW

SUSPENDER SOCKET TYPE 1 (see Table)
1:2.5

SOCKET LOCATION TABLE		
SOCKET TYPE	SUSPENDER TYPE	SUSPENDER ROPE SIZE (mm)
1	1	75 DIA (see Note 4)
2	2	90 DIA (see Note 4)

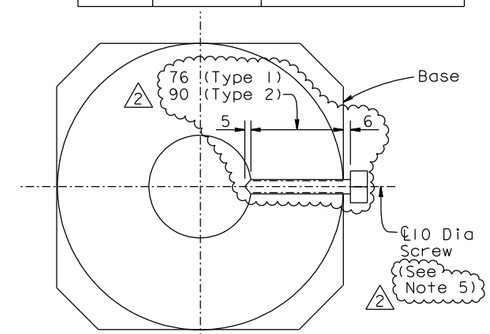

Section A'-A' Similar
SECTION A-A
1:2.5

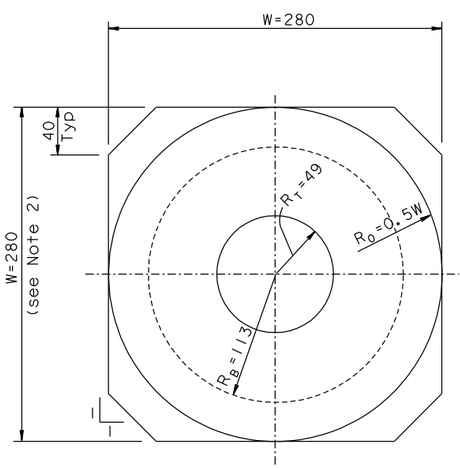

PLAN VIEW
1:2.5

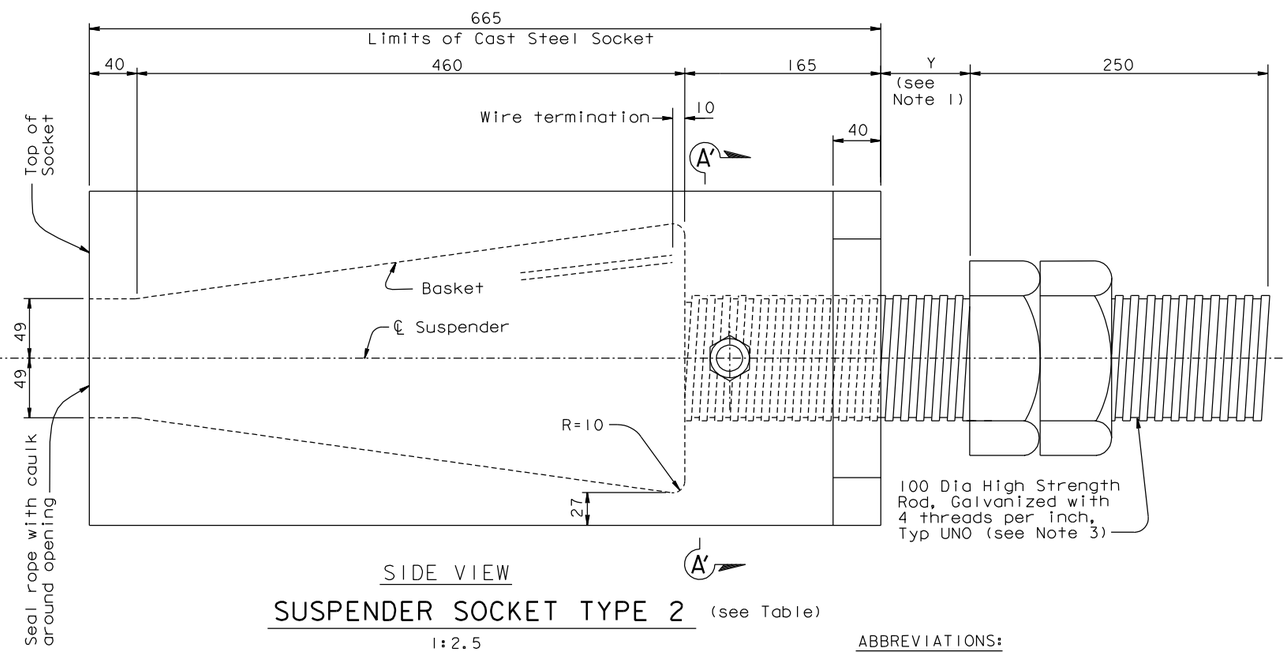

SIDE VIEW

SUSPENDER SOCKET TYPE 2 (see Table)
1:2.5

NOTES:

1. For dimension Y, see "Suspender Bracket Details No.3" sheet.
2. All suspender socket dimensions are for information only. The Contractor shall develop socket details consistent with his means and methods and the suspender bracket geometry, and shall submit them to the Engineer for review and approval. The socket dimensions shall be such that adequate prestressing and erection clearance is provided.

   For alternate suspender socket, see "Suspender Socket Details (Alternate)" sheet.
3. For suspender socket anchor rod material, see "General Notes" sheets.
4. Rope sizes given for information only. For rope size, see "Suspender Layout No.1" sheet.
5. Loctite Blue 243 or an equivalent thread locking compound as approved by the Engineer shall be applied to the set screw. The thread locking compound shall be applied in accordance with the manufacturer's recommendations. (2)

ABBREVIATIONS:

W = Width of Suspender Socket Base
R_T= Radius of Opening at Top of Socket
R_B= Radius of Opening at Bottom of Basket
R_O= Outer Radius of Socket

ALL DIMENSIONS ARE IN MILLIMETERS UNLESS OTHERWISE SHOWN

REGISTERED PROFESSIONAL ENGINEER Marwan N. Nader No. C 054426 Exp. 12/31/11 CIVIL STATE OF CALIFORNIA

FOR REVISIONS ONLY

CONTRACT CHANGE ORDER NO. _____
SHEET ____ OF ____

REQUESTS FOR INFORMATION NOT ADDRESSED IN THIS CCO REMAIN IN FORCE

R. Valizadeh/V. Toan/Y.L./W.L./F.C.
DESIGN OVERSIGHT
Roya Valizadeh / Vong Toan / Y. Liu
SIGN OFF DATE 07/15/11

MARK	DATE	DESCRIPTIONS	BY	CH'D	CCO#
2	07/15/11	SUSPENSION CABLE MISCELLANEOUS DETAILS	GB	MN	185
1	06/11/10	SUSPENDER BRACKETS	GB	MN	104S1

REVISIONS

	BY	CHECKED
DESIGN	G. Baker	T. McMeans
DETAILS	S. Camo	P. Ritchie
QUANTITIES	C. Mauch	C. Mibelli

PREPARED FOR THE STATE OF CALIFORNIA DEPARTMENT OF TRANSPORTATION

R. Manzanarez
PROJECT ENGINEER

BRIDGE NO. 34-0006L/R
KILOMETER POST 13.2/13.9

SAN FRANCISCO OAKLAND BAY BRIDGE
EAST SPAN SEISMIC SAFETY PROJECT
SELF-ANCHORED SUSPENSION BRIDGE
(SUPERSTRUCTURE & TOWER)

SUSPENDER SOCKET DETAILS

Rev. Date: 5-18-98

ORIGINAL SCALE IN MILLIMETERS FOR REDUCED PLANS 0 10 20 30 40 50 60 70 80 90 100

CU 04
EA 0120F1

DISREGARD PRINTS BEARING EARLIER REVISION DATES

REVISION DATES (PRELIMINARY STAGE ONLY): 01/15/99 05/15/99 08/02/99 05/14/01 04/08/02 07/04/02 12/19/02

SHEET 347R2 OF

FILE => I:\bb\04-012001\sas\contract plans and cco\cco\cco#185\5-update 07-15-11\dgn\agsad02.dgn

USERNAME => DWinrow DATE PLOTTED => 15 JUL 2011 TIME PLOTTED => 13:41:29

100% PS&E

DIST.	COUNTY	ROUTE	KILOMETER POST TOTAL PROJECT	SHEET NO.	TOTAL SHEETS
04	SF	80	13.2/13.9	791R2	1204

REGISTERED ENGINEER - CIVIL

12-6-04
PLANS APPROVAL DATE

REGISTERED PROFESSIONAL ENGINEER John Sun No. C 54648 Exp. 12/31/05 CIVIL STATE OF CALIFORNIA

The State of California or its officers or agents shall not be responsible for the accuracy or completeness of electronic copies of this plan sheet.

T.Y. LIN / MOFFATT & NICHOL
825 BATTERY STREET
SAN FRANCISCO, CA 94111

Caltrans now has a web site! To get to the web site, go to: http://www.dot.ca.gov

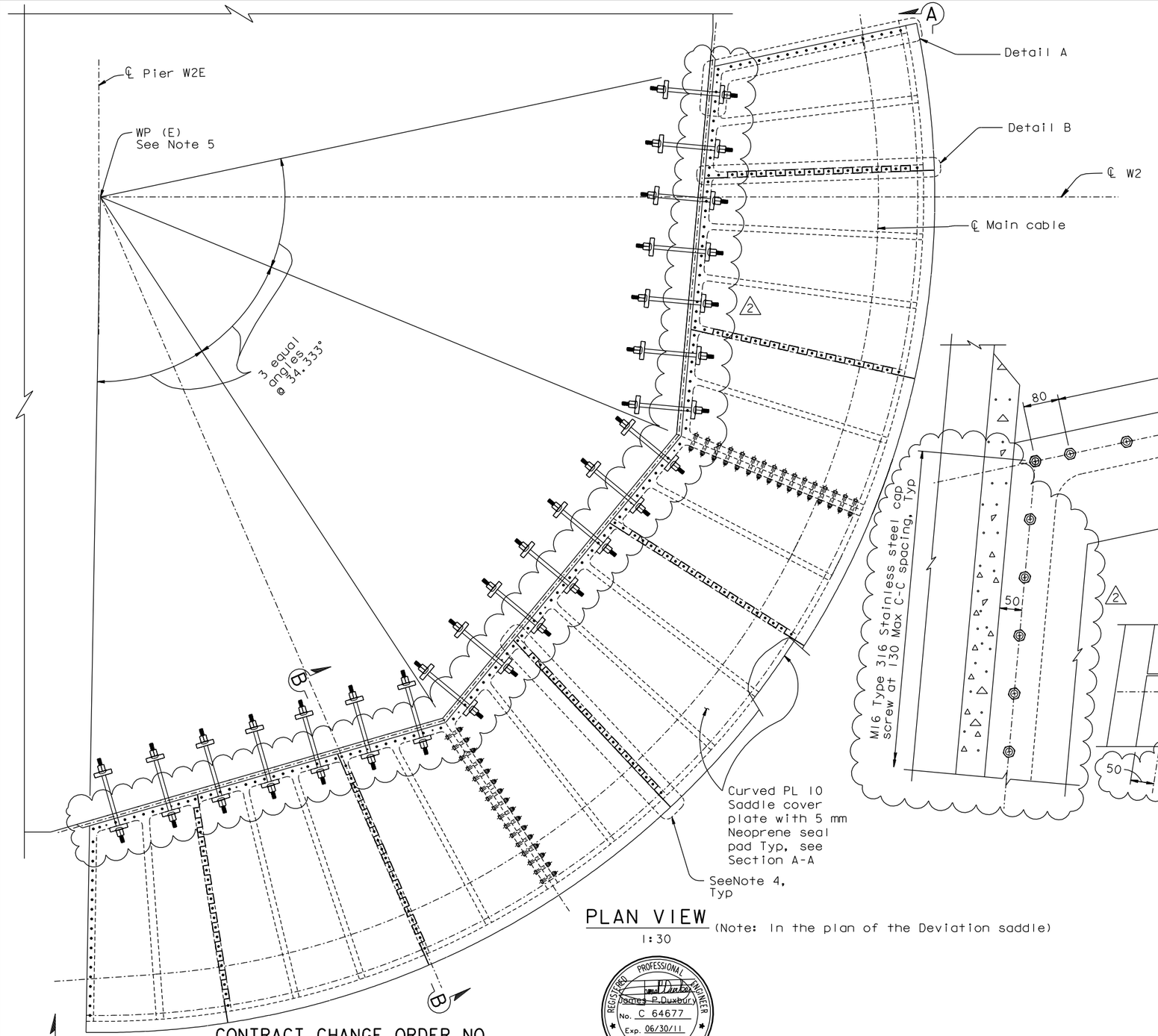

PLAN VIEW
1:30
(Note: In the plan of the Deviation saddle)

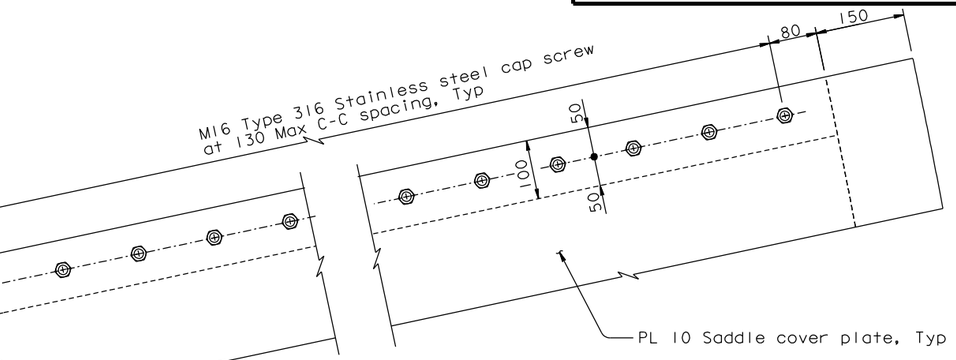

DETAIL A
1:5

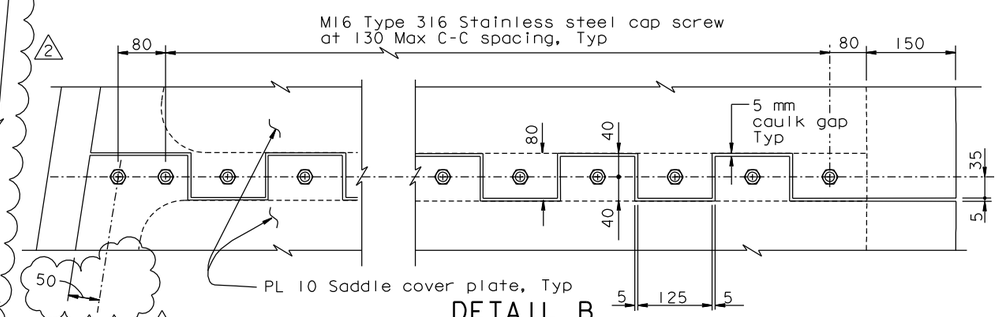

DETAIL B
1:5

NOTES:

1. For additional details, see "West Deviation Saddle Details" sheets.
2. For Section A-A and Section B-B, see "West Deviation Saddle Housing Details No.2" sheet.
3. All plate shall be ASTM A709M Grade 345, unless specified otherwise.
4. If the Contractor elects to use the West Deviation Saddle Splice Alternate, the joint between the saddle cover plates shall not coincide with saddle splice.
5. WP(E) and WP(W) do not coincide with ℄ of Pier W2, ℄ Pier W2W nor ℄ Pier W2W.

CONTRACT CHANGE ORDER NO. ____
SHEET ___ OF ___

REQUESTS FOR INFORMATION NOT ADDRESSED IN THIS CCO REMAIN IN FORCE

REGISTERED PROFESSIONAL ENGINEER James P. Duxbury No. C 64677 Exp. 06/30/11 CIVIL STATE OF CALIFORNIA

FOR REVISIONS ONLY

ALL DIMENSIONS ARE IN MILLIMETERS UNLESS OTHERWISE SHOWN

MARK	DATE	DESCRIPTIONS	BY	CH'D	CCO#
2	02/25/11	SUSPENSION CABLE MISCELLANEOUS DETAILS	JD	GB	185
1	01/31/07	WEST DEVIATION SADDLE GEOMETRY	PC	JD	15

REVISIONS

R. Valizadeh/V. Toan/Y.L./W.L./F.C.
DESIGN OVERSIGHT
SIGN OFF DATE 02/25/11

	BY	CHECKED
DESIGN	J. Sun	T. McMeans
DETAILS	J. Duxbury	T. McMeans
QUANTITIES	J. Duxbury	S. Shi

PREPARED FOR THE STATE OF CALIFORNIA DEPARTMENT OF TRANSPORTATION

R. Manzanarez
PROJECT ENGINEER

BRIDGE NO. 34-0006L/R
KILOMETER POST 13.2/13.9

SAN FRANCISCO OAKLAND BAY BRIDGE
EAST SPAN SEISMIC SAFETY PROJECT
SELF-ANCHORED SUSPENSION BRIDGE
(SUPERSTRUCTURE & TOWER)

WEST DEVIATION SADDLE HOUSING DETAILS NO.1

Rev. Date: 5-18-98

ORIGINAL SCALE IN MILLIMETERS FOR REDUCED PLANS 0 10 20 30 40 50 60 70 80 90 100

CU 04
EA 0120F1

DISREGARD PRINTS BEARING EARLIER REVISION DATES

REVISION DATES (PRELIMINARY STAGE ONLY): 05/15/99 08/02/99 05/31/01 04/08/02 01/01/02 12/19/02 09/06/04 12/01/05

SHEET 374R2 OF

FILE => I:\bb\04-012001\sas\contract plans and cco\cco\cco#185\2-revision 02-25-11\dgn\agshd01.dgn

USERNAME => DWinrow DATE PLOTTED => 24 FEB 2011 TIME PLOTTED => 15:12:00

100% PS&E

DIST.	COUNTY	ROUTE	KILOMETER POST TOTAL PROJECT	SHEET NO.	TOTAL SHEETS
04	SF	80	13.2/13.9	793R2	1204

REGISTERED ENGINEER - CIVIL

12-6-04
PLANS APPROVAL DATE

REGISTERED PROFESSIONAL ENGINEER John Sun No. C 54648 Exp. 12/31/05 CIVIL STATE OF CALIFORNIA

The State of California or its officers or agents shall not be responsible for the accuracy or completeness of electronic copies of this plan sheet.

T.Y. LIN / MOFFATT & NICHOL
825 BATTERY STREET
SAN FRANCISCO, CA 94111

Caltrans now has a web site! To get to the web site, go to: http://www.dot.ca.gov

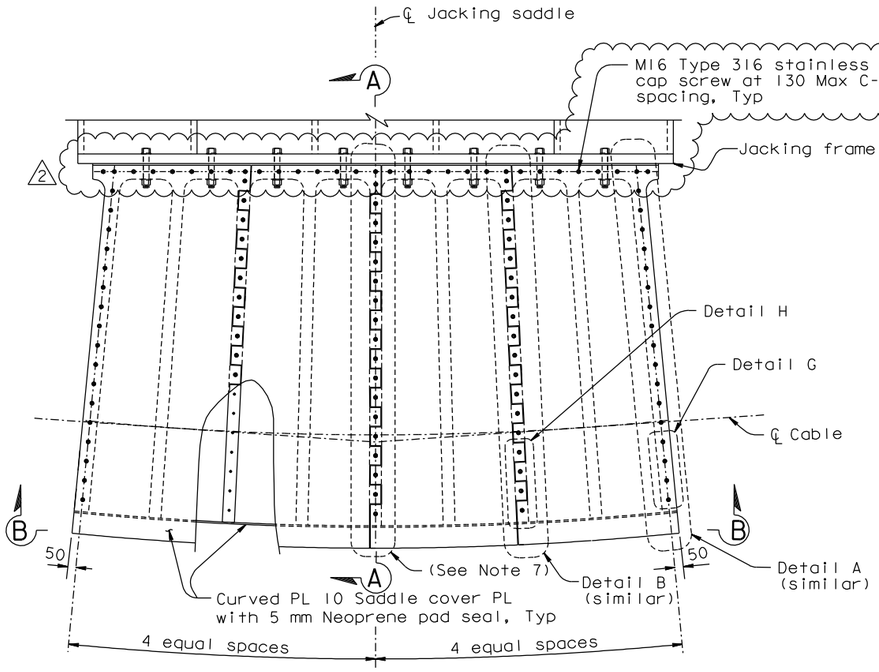

PLAN VIEW (In the plan of the Jacking Saddle)
1:20

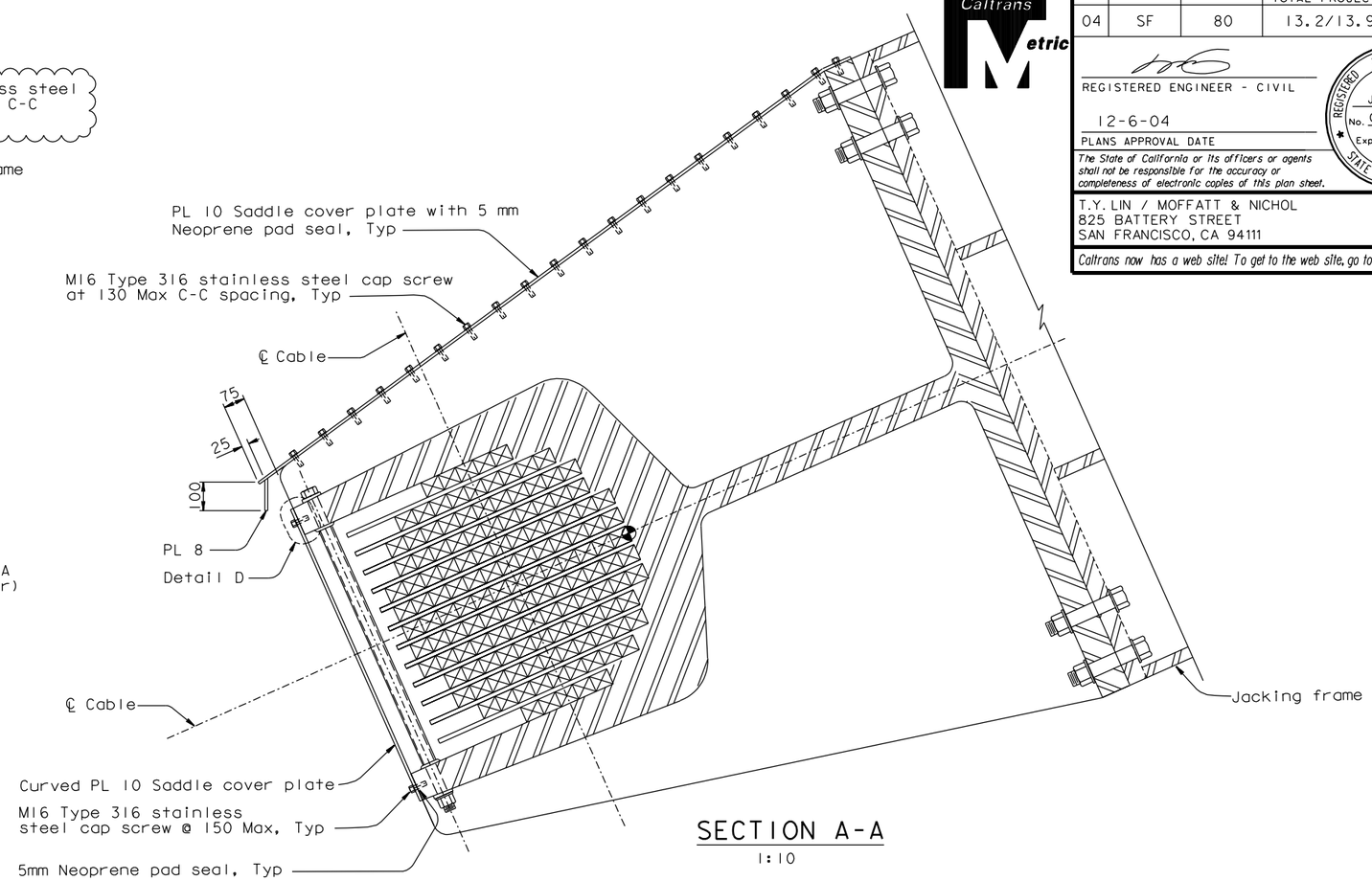

SECTION A-A
1:10

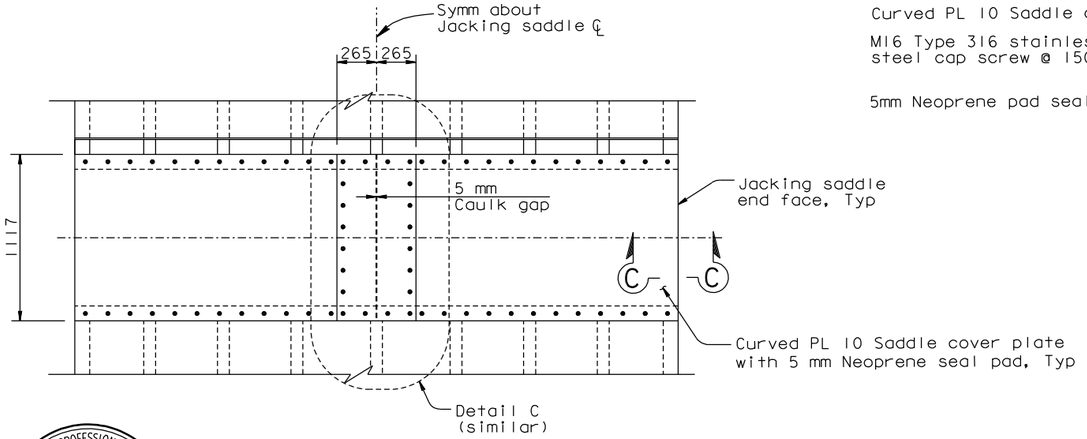

ELEVATION B-B
1:20

NOTES:

1. For additional details, see "West Jacking Saddle Details" sheets.
2. For jacking frame details, see "West Jacking Frame Details" sheets.
3. For Details A and B, see "West Deviation Saddle Housing Details No. 1" sheet.
4. For Section C-C and Details C and D, see "West Deviation Saddle Housing Details No. 2" sheet.
5. All plate shall be ASTM A709M Grade 345, unless specified otherwise.
6. For Details H and G, see "West Anchorage Access Details No. 4" sheet.
7. If the Contractor elects to use the West Jacking Saddle Splice Alternate, the joint between the saddle cover plates shall be removed.

REGISTERED PROFESSIONAL ENGINEER James P. Duxbury No. C 64677 Exp. 06/30/11 CIVIL STATE OF CALIFORNIA

FOR REVISIONS ONLY

CONTRACT CHANGE ORDER NO. _____
SHEET ____ OF ____

REQUESTS FOR INFORMATION NOT ADDRESSED IN THIS CCO REMAIN IN FORCE

ALL DIMENSIONS ARE IN MILLIMETERS UNLESS OTHERWISE SHOWN

R. Valizadeh/V. Toan/Y.L./W.L./F.C.
DESIGN OVERSIGHT
SIGN OFF DATE 02/25/11

MARK	DATE	DESCRIPTIONS	BY	CH'D	CCO#
2	02/25/11	SUSPENSION CABLE MISCELLANEOUS DETAILS	JD	GB	185
1	04/20/07	WEST ANCHORAGE ACCESS DETAILS	JD	AS	28

REVISIONS

	BY	CHECKED
DESIGN	J. Sun	T. McMeans
DETAILS	J. Duxbury	T. McMeans
QUANTITIES	J. Duxbury	S. Shi

PREPARED FOR THE STATE OF CALIFORNIA DEPARTMENT OF TRANSPORTATION

R. Manzanarez
PROJECT ENGINEER

BRIDGE NO. 34-0006L/R
KILOMETER POST 13.2/13.9

SAN FRANCISCO OAKLAND BAY BRIDGE
EAST SPAN SEISMIC SAFETY PROJECT
SELF-ANCHORED SUSPENSION BRIDGE
(SUPERSTRUCTURE & TOWER)

WEST JACKING SADDLE HOUSING DETAILS

Rev. Date: 5-18-98

ORIGINAL SCALE IN MILLIMETERS FOR REDUCED PLANS 0 10 20 30 40 50 60 70 80 90 100

CU 04
EA 0120F1

DISREGARD PRINTS BEARING EARLIER REVISION DATES

REVISION DATES (PRELIMINARY STAGE ONLY) 05/31/01 04/08/02 07/01/02 12/19/02

SHEET 376R2 OF

FILE => L:\BB\04-012001\SAS\Contract Plans and CCO\CCO\CCO#185\2-Revision 02-25-11\DGN\agshd02a.dgn

USERNAME => DWinrow DATE PLOTTED => 25 FEB 2011 TIME PLOTTED => 10:04:24

100 % PS&E