DIST.	COUNTY	ROUTE	KILOMETER POST TOTAL PROJECT	SHEET NO.	TOTAL SHEETS
04	SF	80	13.2/13.9	808R1	1204

REGISTERED ENGINEER - CIVIL

12-6-04
PLANS APPROVAL DATE

REGISTERED PROFESSIONAL ENGINEER John Sun No. C 54648 Exp. 12/31/05 CIVIL STATE OF CALIFORNIA

The State of California or its officers or agents shall not be responsible for the accuracy or completeness of electronic copies of this plan sheet.

T.Y. LIN / MOFFATT & NICHOL
825 BATTERY STREET
SAN FRANCISCO, CA 94111

Caltrans now has a web site! To get to the web site, go to: http://www.dot.ca.gov

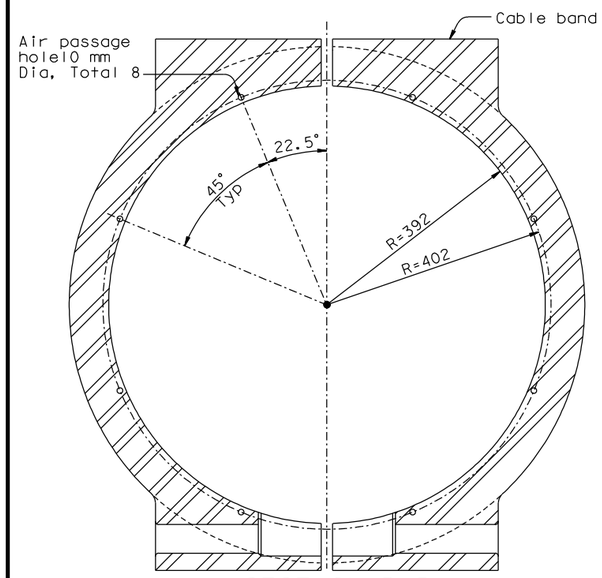

SECTION D-D
1:5

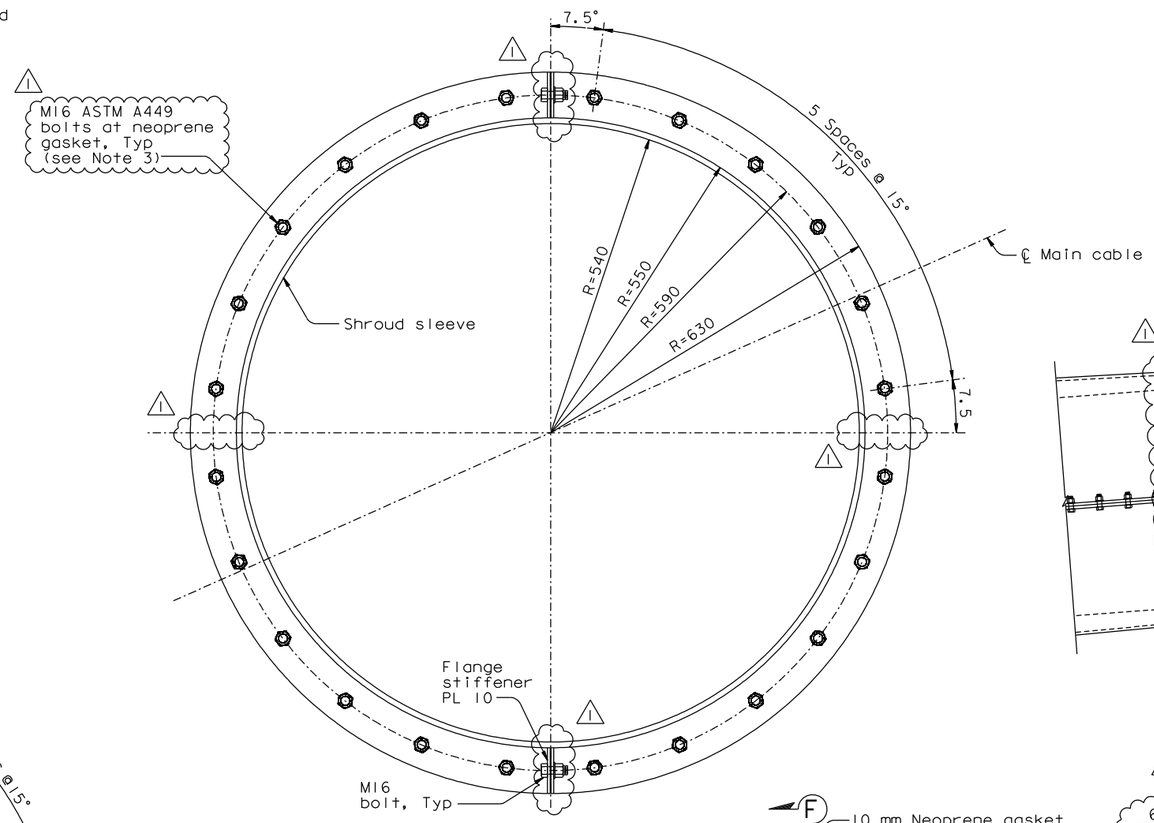

SECTION F-F
1:5

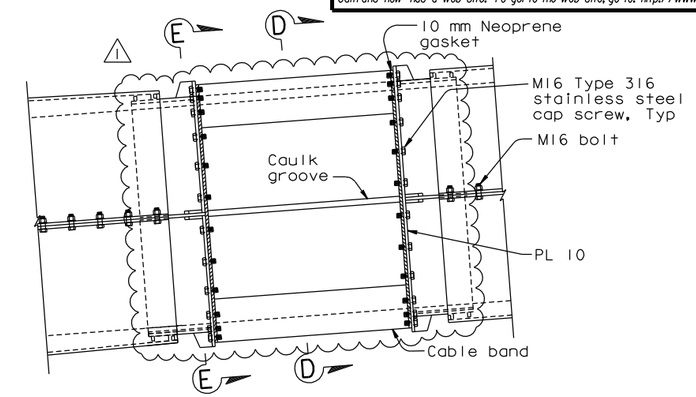

DETAIL F
1:10

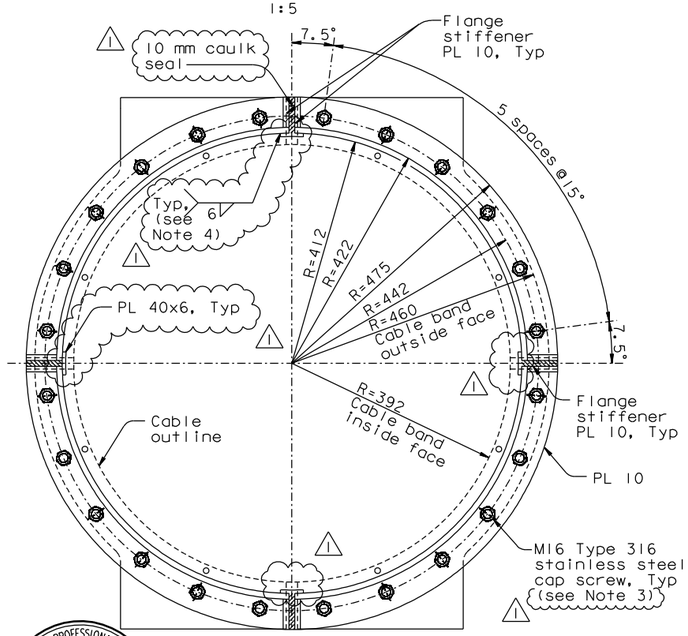

SECTION E-E
1:5

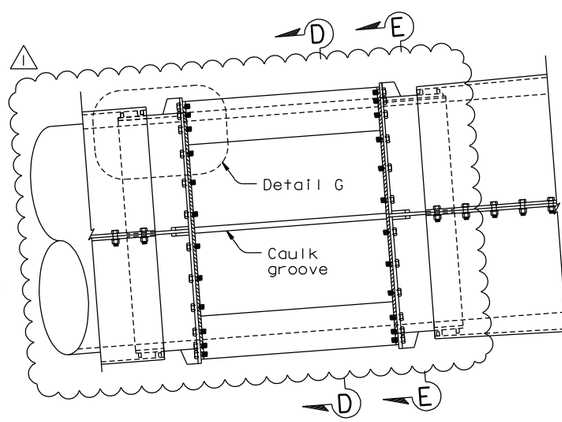

DETAIL D
1:10

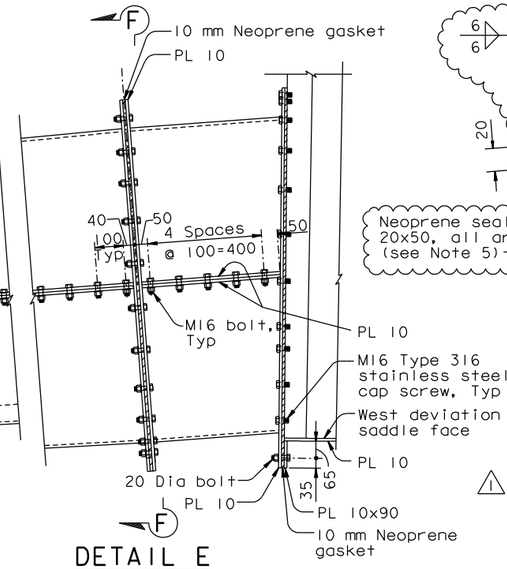

DETAIL E
1:10

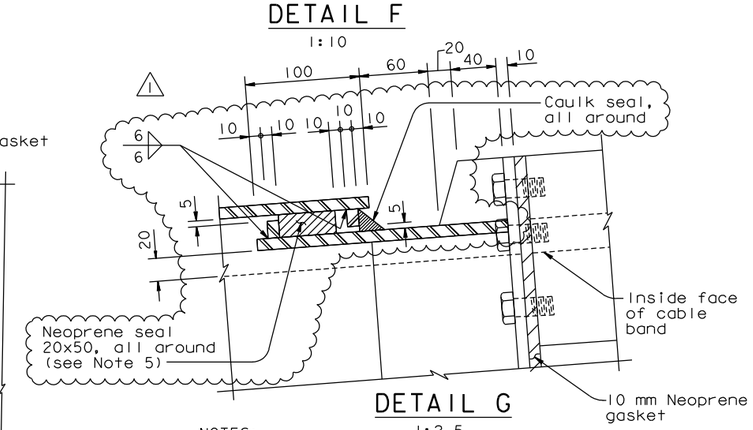

DETAIL G
1:2.5

NOTES:

1. For additional details, see "West Cable Shroud Details No.1" sheet.
2. For cable band details, see "Cable Band Details" sheet.
3. At the Contractor's option, M16 bolts and cap screws may be in 22 Dia holes with 40 ODx6 mm plate washer under head and nut.
4. At the Contractor's option, fillet weld may be applied to either side of PL 40x6.
5. Neoprene seal shall be wrapped around sealing assembly bent PL and shall have no gap around the perimeter. Seal shall be compressed to fit during shroud installation.

REGISTERED PROFESSIONAL ENGINEER James P.Duxbury No. C 64677 Exp. 06/30/13 CIVIL STATE OF CALIFORNIA

FOR REVISIONS ONLY

CONTRACT CHANGE ORDER NO. _____
SHEET ____ OF ____

REQUESTS FOR INFORMATION NOT ADDRESSED IN THIS CCO REMAIN IN FORCE

ALL DIMENSIONS ARE IN MILLIMETERS UNLESS OTHERWISE SHOWN

100 % PS&E

R. Valizadeh/V. Toan/Y.L./W.L./F.C.
DESIGN OVERSIGHT
SIGN OFF DATE 12/22/11

MARK	DATE	DESCRIPTIONS	BY	CH'D	CCO#
1	12/22/11	SUSPENSION CABLE MISCELLANEOUS DETAILS	GB	JD	185

REVISIONS

DESIGN	BY J. Sun	CHECKED	T. McMeans
DETAILS	BY J. Duxbury	CHECKED	T. McMeans
QUANTITIES	BY S. Shi	CHECKED	D. Harrison

PREPARED FOR THE STATE OF CALIFORNIA DEPARTMENT OF TRANSPORTATION

R. Manzanarez
PROJECT ENGINEER

BRIDGE NO. 34-0006L/R
KILOMETER POST 13.2/13.9

SAN FRANCISCO OAKLAND BAY BRIDGE
EAST SPAN SEISMIC SAFETY PROJECT
SELF-ANCHORED SUSPENSION BRIDGE
(SUPERSTRUCTURE & TOWER)

WEST CABLE SHROUD DETAILS NO. 2

Rev. Date: 5-18-98

ORIGINAL SCALE IN MILLIMETERS FOR REDUCED PLANS 0 10 20 30 40 50 60 70 80 90 100

CU 04
EA 0120F1

DISREGARD PRINTS BEARING EARLIER REVISION DATES

REVISION DATES (PRELIMINARY STAGE ONLY) 08/07/99 05/31/01 04/08/02 01/07/02 12/19/02

SHEET 391R1 OF

FILE => I:\bb\04-01200I\sas\contract plans and cco\cco\cco#185\7-update 12-22-11\dgn\agshr02.dgn

USERNAME => DWithrow DATE PLOTTED => 21 DEC 2011 TIME PLOTTED => 11:52:13