DIST.	COUNTY	ROUTE	KILOMETER POST TOTAL PROJECT	SHEET NO.	TOTAL SHEETS
04	SF	80	13.2/13.9	807R2	1204

REGISTERED ENGINEER - CIVIL

12-6-04

PLANS APPROVAL DATE

REGISTERED PROFESSIONAL ENGINEER John Sun No. C 54648 Exp. 12/31/05 CIVIL STATE OF CALIFORNIA

The State of California or its officers or agents shall not be responsible for the accuracy or completeness of electronic copies of this plan sheet.

T.Y. LIN / MOFFATT & NICHOL
825 BATTERY STREET
SAN FRANCISCO, CA 94111

Caltrans now has a web site! To get to the web site, go to: http://www.dot.ca.gov

Caltrans Metric

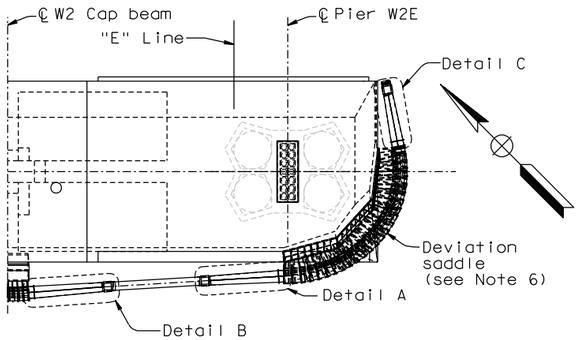

KEY PLAN
NTS

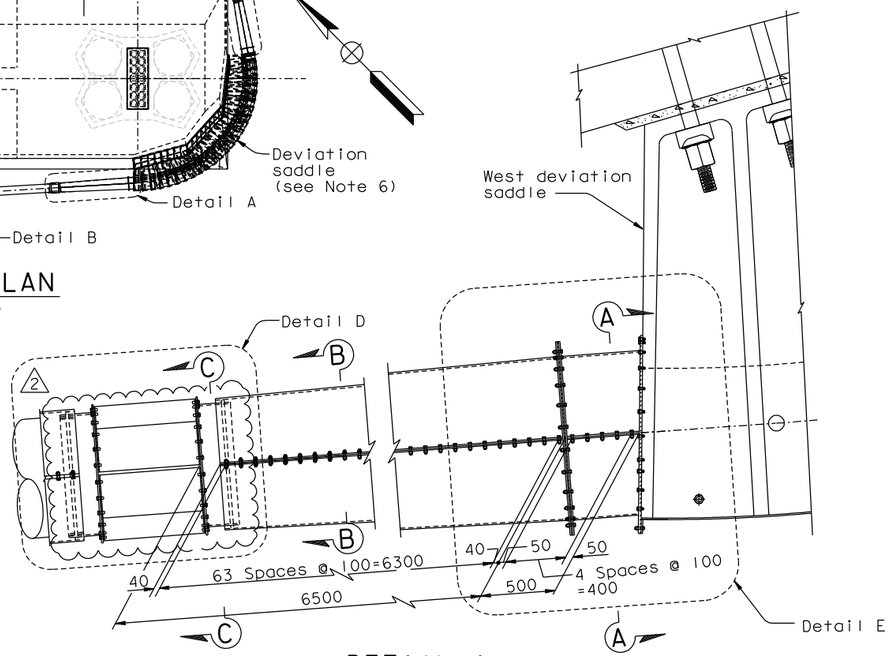

DETAIL A
1:20

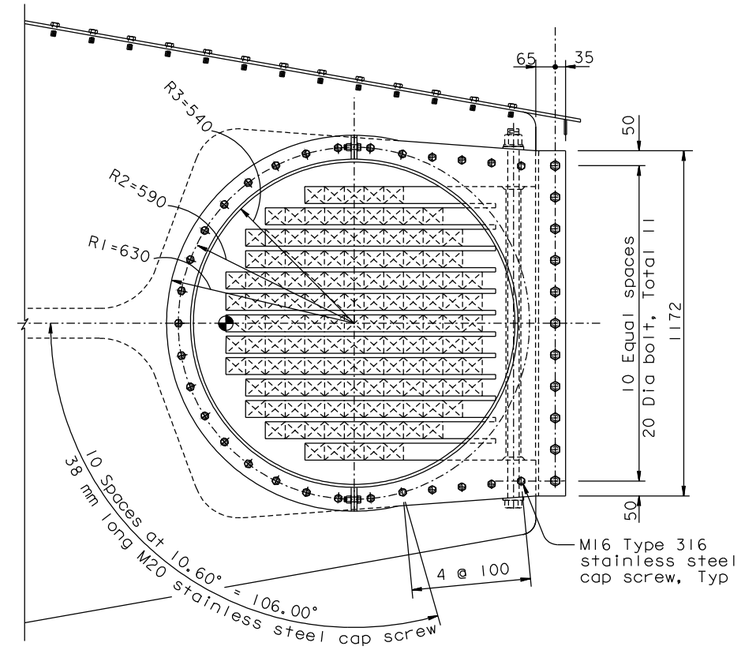

SECTION A-A (Project to deviation saddle face)
1:10

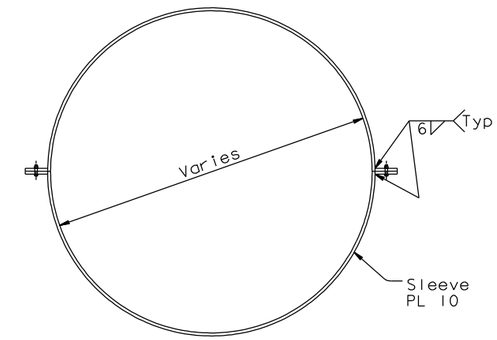

SECTION B-B
1:10

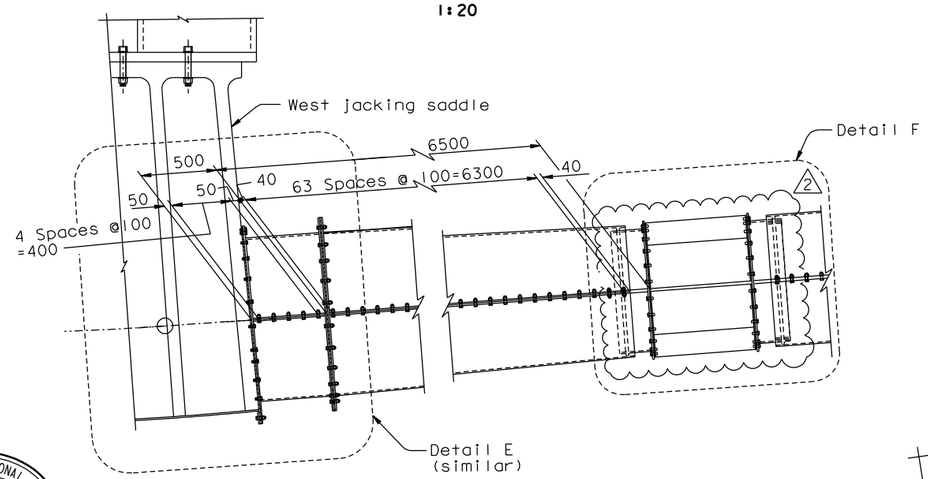

DETAIL B
1:20

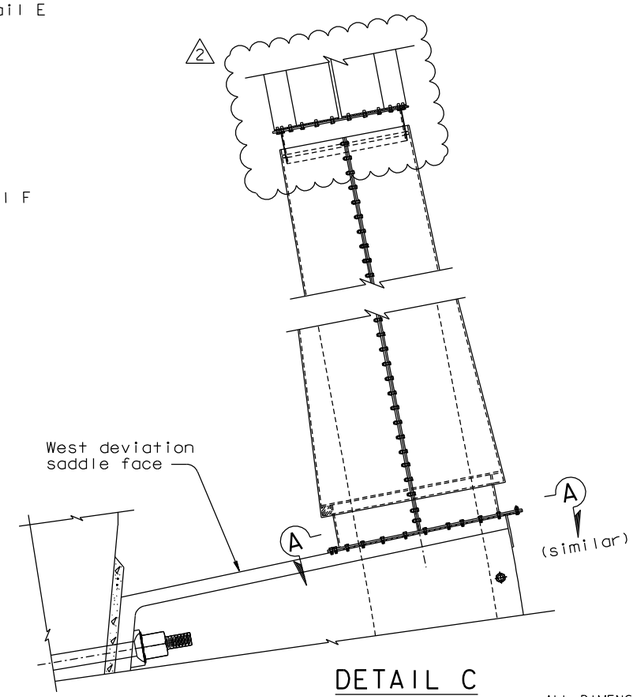

DETAIL C
1:20

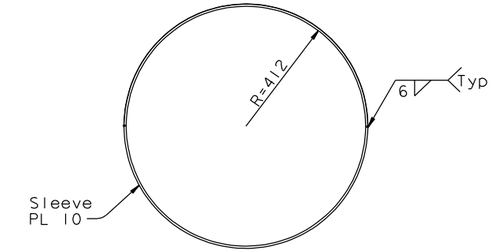

SECTION C-C
1:10

NOTES:

1. For Details D through F, see "West Cable Shroud Details No.2" sheet.
2. All details, except the key plan, are presented in the plan of looping anchorage cable.
3. For Detail C, see "Tower Cable Shroud Details" sheet.
4. West cable shroud details shown are "E" Line, "W" Line similar.
5. All plate shall be ASTM A709M Grade 345, unless specified otherwise.
6. Views of the deviation saddle are for illustration only. For deviation saddle details, see "West Deviation Saddle Details" sheets.

ALL DIMENSIONS ARE IN MILLIMETERS UNLESS OTHERWISE SHOWN

REGISTERED PROFESSIONAL ENGINEER James P. Duxbury No. C 64677 Exp. 06/30/13 CIVIL STATE OF CALIFORNIA

FOR REVISIONS ONLY

CONTRACT CHANGE ORDER NO. _____
SHEET ___ OF ___

REQUESTS FOR INFORMATION NOT ADDRESSED IN THIS CCO REMAIN IN FORCE

R. Valizadeh/V. Toan/Y.L./W.L./F.C.
DESIGN OVERSIGHT
Roya Valizadeh / Vong Toan / Y. Liu
SIGN OFF DATE 12/02/11

MARK	DATE	DESCRIPTIONS	BY	CH'D	CCO#
2	12/02/11	SUSPENSION CABLE MISCELLANEOUS DETAILS	GB	JD	185
1	04/20/07	WEST ANCHORAGE ACCESS DETAILS	JD	AS	28

REVISIONS

DESIGN	BY J. Sun	CHECKED	T. McMeans
DETAILS	BY J. Duxbury	CHECKED	T. McMeans
QUANTITIES	BY S. Shi	CHECKED	D. Harrison

PREPARED FOR THE STATE OF CALIFORNIA DEPARTMENT OF TRANSPORTATION

R. Manzanarez
PROJECT ENGINEER

BRIDGE NO. 34-0006L/R
KILOMETER POST 13.2/13.9

SAN FRANCISCO OAKLAND BAY BRIDGE
EAST SPAN SEISMIC SAFETY PROJECT
SELF-ANCHORED SUSPENSION BRIDGE
(SUPERSTRUCTURE & TOWER)

WEST CABLE SHROUD DETAILS NO. 1

Rev. Date: 5-18-98

ORIGINAL SCALE IN MILLIMETERS FOR REDUCED PLANS 0 10 20 30 40 50 60 70 80 90 100

CU 04
EA 0120F1

DISREGARD PRINTS BEARING EARLIER REVISION DATES

REVISION DATES (PRELIMINARY STAGE ONLY) 08/02/99 05/31/01 04/08/02 07/09/02 12/19/02 09/08/04 12/07/05

SHEET 390R2 OF

FILE => I:\bb\04-012001\sas\contract plans and cco\cco\cco#185\6-revision 12-02-11\dgn\agshr01.dgn

USERNAME => DWinrow DATE PLOTTED => 02 DEC 2011 TIME PLOTTED => 14:23:33

100% PS&E