DIST.	COUNTY	ROUTE	KILOMETER POST TOTAL PROJECT	SHEET NO.	TOTAL SHEETS
04	SF	80	13.2/13.9	741S1	1204

REGISTERED ENGINEER - CIVIL

02-08-11

PLANS APPROVAL DATE

REGISTERED PROFESSIONAL ENGINEER Marwan N. Nader No. C 054426 Exp. 12/31/11 CIVIL STATE OF CALIFORNIA

The State of California or its officers or agents shall not be responsible for the accuracy or completeness of electronic copies of this plan sheet.

T.Y. LIN / MOFFATT & NICHOL
825 BATTERY STREET
SAN FRANCISCO, CA 94111

Caltrans now has a web site! To get to the web site, go to: http://www.dot.ca.gov

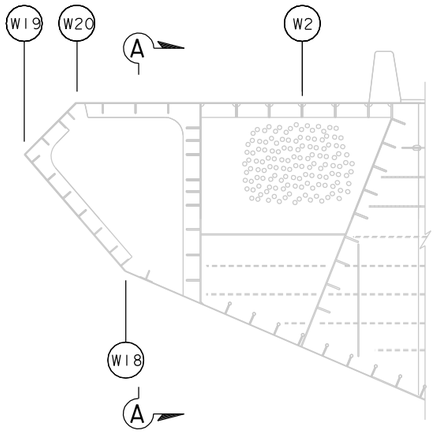

WESTBOUND

PP 120.5

1:50

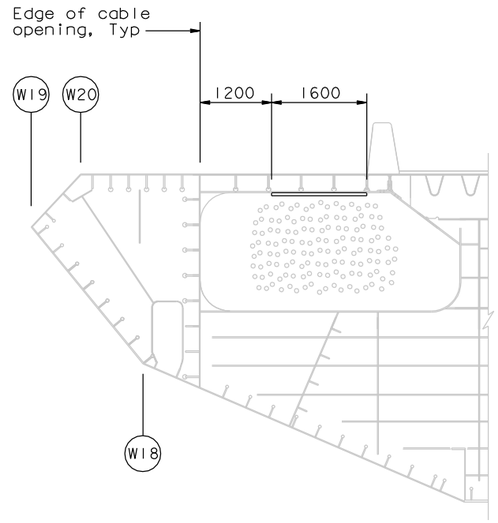

WESTBOUND

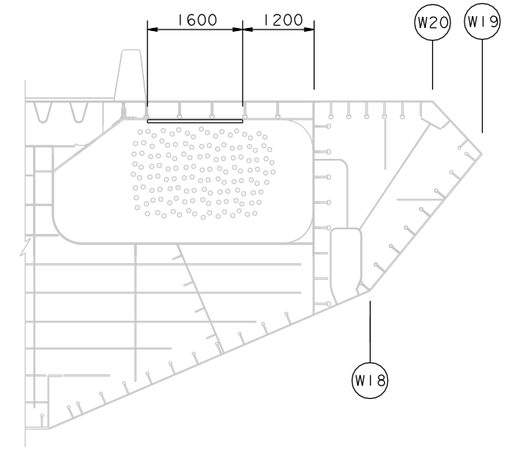

EASTBOUND

PP 121

1:50

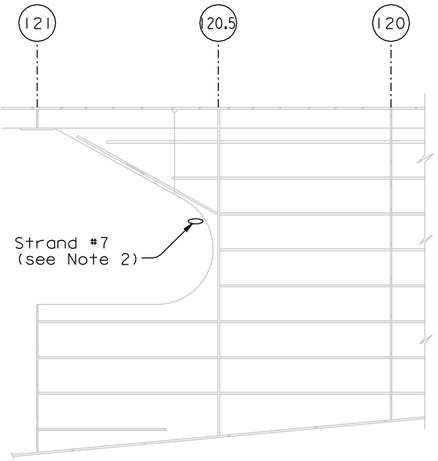

SECTION A-A

1:40

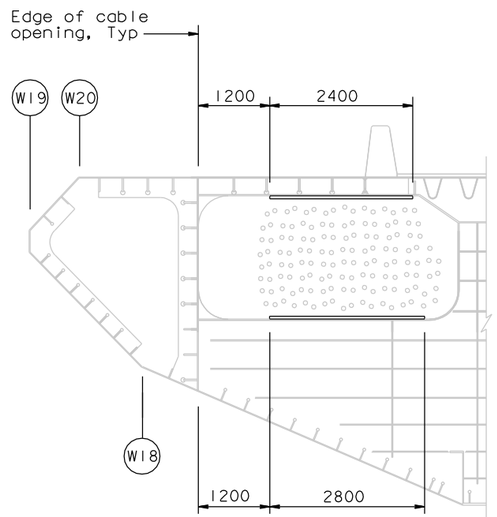

WESTBOUND

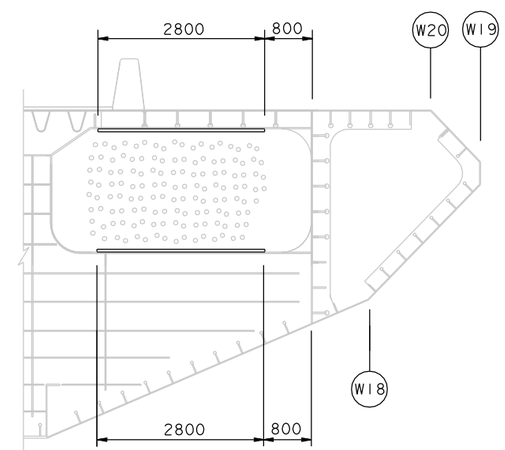

EASTBOUND

PP 121.5

1:50

LEGEND:

- Protective neoprene pad (see Note 1)

NOTES:

1. For details of neoprene pad at cable opening flanges, see "Suspension Cable Miscellaneous Details No.6" sheet.
2. Strand #7 shall be wrapped in the vicinity of the K plate per the "PWS Strand Sheathing" detail on "Suspension Cable Miscellaneous Details No.4" sheet.

CONTRACT CHANGE ORDER NO. _____
SHEET ____ OF ____

REQUESTS FOR INFORMATION NOT ADDRESSED IN THIS CCO REMAIN IN FORCE

ALL DIMENSIONS ARE IN MILLIMETERS UNLESS OTHERWISE SHOWN

R. Valizadeh/V. Toan/Y.L./W.L./F.C.
DESIGN OVERSIGHT
Roya Valizadeh / Vonn Toan / Y. Liu
SIGN OFF DATE 02/08/11

MARK	DATE	DESCRIPTIONS	BY	CH'D	CCO#
1	02/08/11	SUSPENSION CABLE MISCELLANEOUS DETAILS	MN	GB	185

REVISIONS

DESIGN	BY M. Nader	CHECKED G. Baker	
DETAILS	BY D. Turner	CHECKED A. Baumberger	
QUANTITIES	BY D. Turner	CHECKED A. Baumberger	

PREPARED FOR THE STATE OF CALIFORNIA DEPARTMENT OF TRANSPORTATION

R. Manzanarez
PROJECT ENGINEER

BRIDGE NO. 34-0006L/R
KILOMETER POST 13.2/13.9

SAN FRANCISCO OAKLAND BAY BRIDGE
EAST SPAN SEISMIC SAFETY PROJECT
SELF-ANCHORED SUSPENSION BRIDGE
(SUPERSTRUCTURE & TOWER)

SUSPENSION CABLE MISCELLANEOUS DETAILS NO.1

Rev. Date: 5-18-98

ORIGINAL SCALE IN MILLIMETERS FOR REDUCED PLANS 0 10 20 30 40 50 60 70 80 90 100

CU 04
EA 0120F1

DISREGARD PRINTS BEARING EARLIER REVISION DATES 02/08/11

REVISION DATES (PRELIMINARY STAGE ONLY)

SHEET 324S1 OF

FILE => I:\bb\04-012001\sas\contract plans and cco\cco\cco#185\1-original 02-04-11\dgn\agsc104a.dgn

100% PS&E

USERNAME => DWinrow DATE PLOTTED => 08 FEB 2011 TIME PLOTTED => 13:04:57