DIST.	COUNTY	ROUTE	KILOMETER POST TOTAL PROJECT	SHEET NO.	TOTAL SHEETS
04	SF	80	13.2/13.9	810R1	1204

George Baker
REGISTERED ENGINEER - CIVIL
12-6-04
PLANS APPROVAL DATE

REGISTERED PROFESSIONAL ENGINEER George S. Baker No. C 57112 Exp. 12/31/05 CIVIL STATE OF CALIFORNIA

The State of California or its officers or agents shall not be responsible for the accuracy or completeness of electronic copies of this plan sheet.

T.Y. LIN / MOFFATT & NICHOL
825 BATTERY STREET
SAN FRANCISCO, CA 94111

Caltrans now has a web site! To get to the web site, go to: http://www.dot.ca.gov

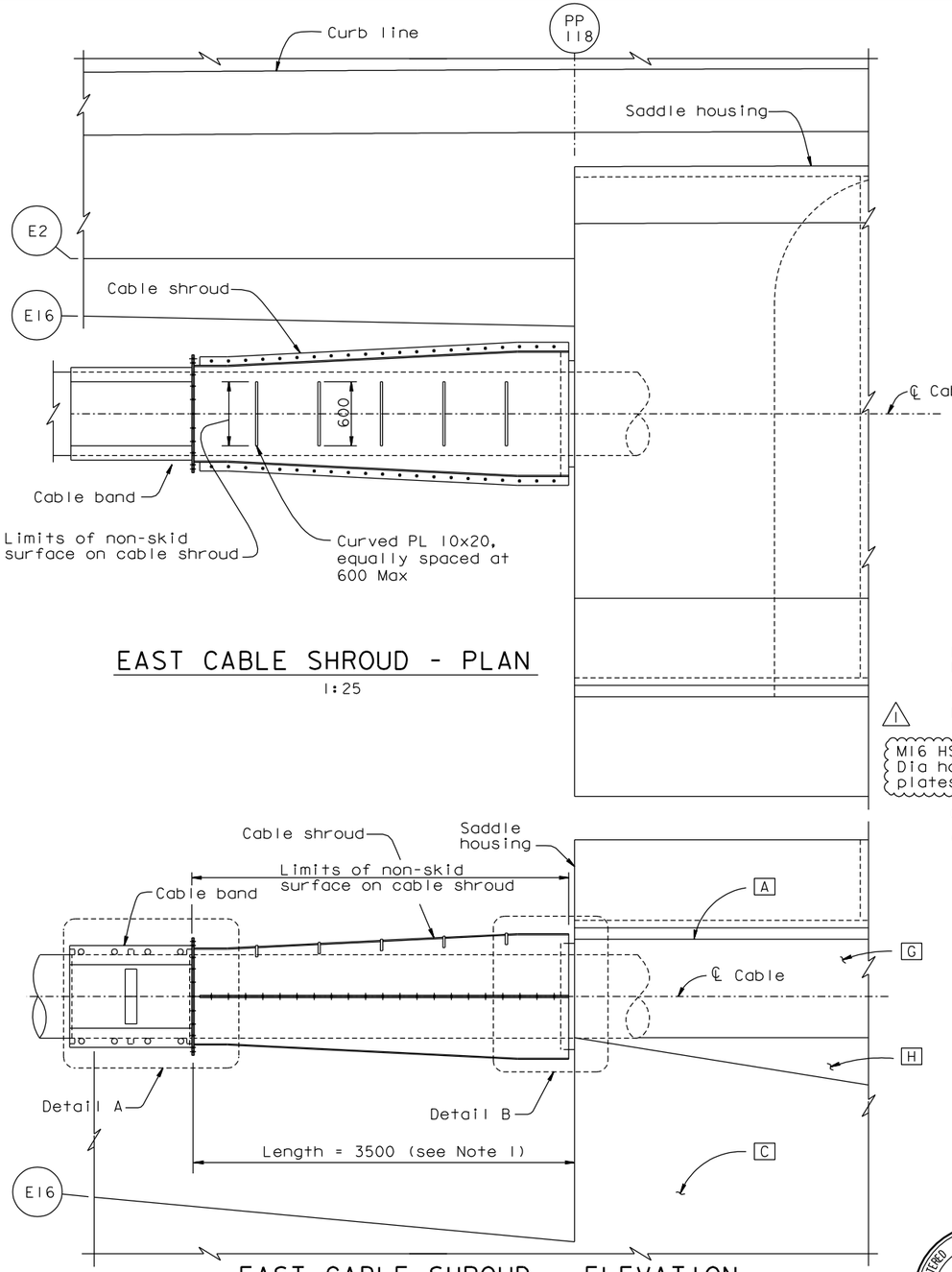

EAST CABLE SHROUD - PLAN
1:25

EAST CABLE SHROUD - ELEVATION
1:25

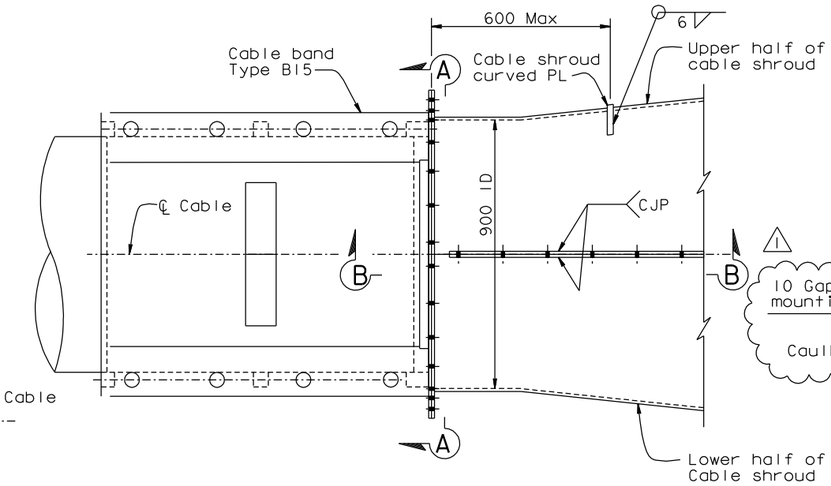

DETAIL A
1:10

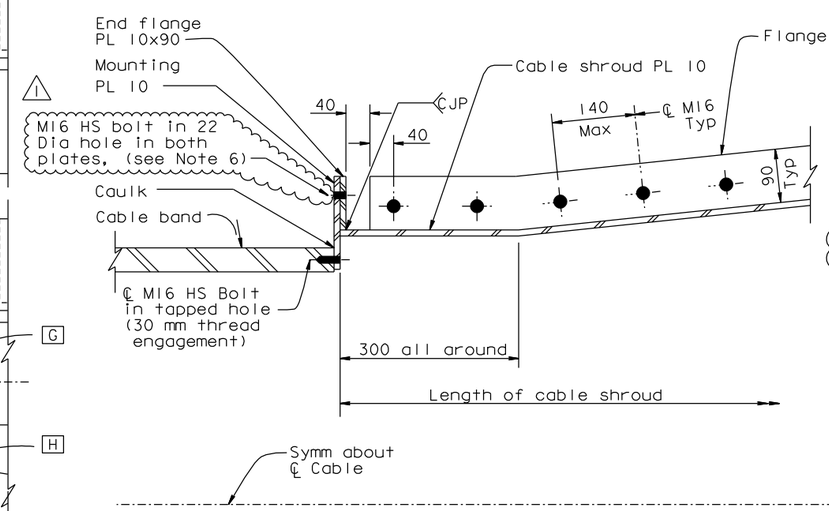

SECTION B-B
1:5

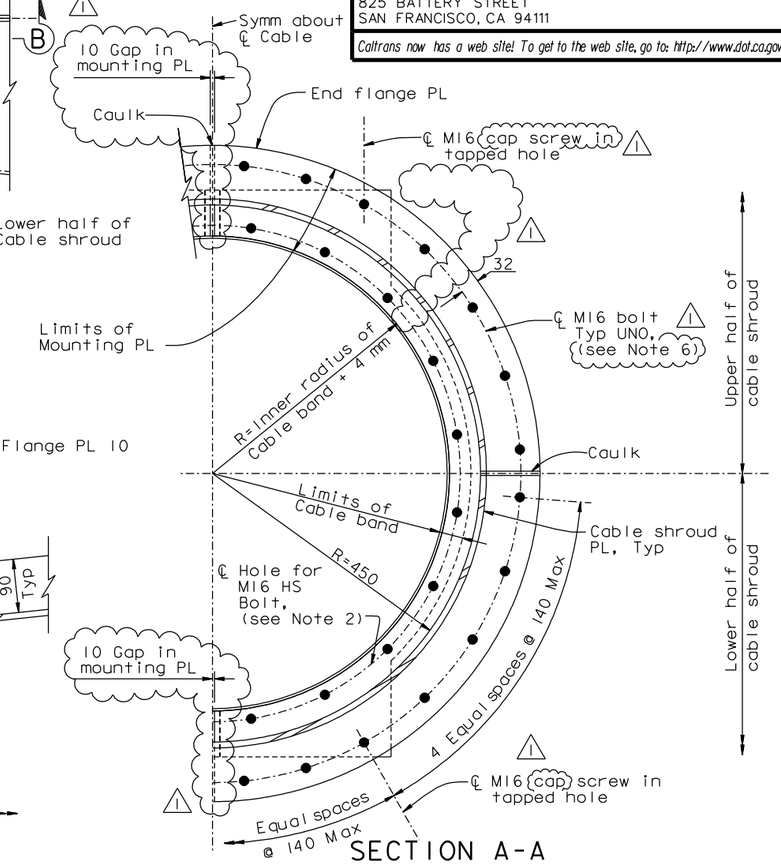

SECTION A-A
1:5

NOTES:

1. Dimension shown for cable shroud length applies to east anchorage locations only. Cable shroud length varies at all other locations.
2. Cable band bolts shall be tightened prior to installing mounting PL. Mounting plate holes may be 22 Dia. 1
3. For saddle housing, see "East Saddle Housing Details" sheets.
4. For cable band details, see "Cable Band Details" sheets.
5. For Detail B, see "East Cable Shroud Details No. 2" sheet.
6. M16 HS bolt in 22 Dia holes shall have 40 ODx6 mm plate washers under both head and nut. 1

CONTRACT CHANGE ORDER NO. ____
SHEET ___ OF ___

REQUESTS FOR INFORMATION NOT ADDRESSED IN THIS CCO REMAIN IN FORCE

REGISTERED PROFESSIONAL ENGINEER Morwan N. Nader No. C 054426 Exp. 12/31/13 CIVIL STATE OF CALIFORNIA

FOR REVISIONS ONLY

ALL DIMENSIONS ARE IN MILLIMETERS UNLESS OTHERWISE SHOWN

R. Valizadeh/V. Toan/Y.L./W.L./F.C.
DESIGN OVERSIGHT
Rezn Valizadeh / Vong Toan / Y. Liu
SIGN OFF DATE 12/02/11

MARK	DATE	DESCRIPTIONS	BY	CH'D	CCO#
1	12/02/11	SUSPENSION CABLE MISCELLANEOUS DETAILS	GB	MN	185

REVISIONS

DESIGN	BY G. Baker	CHECKED	T. McMeans
DETAILS	BY D. Turner	CHECKED	T. McMeans
QUANTITIES	BY C. Mauch	CHECKED	D. Harrison

PREPARED FOR THE STATE OF CALIFORNIA DEPARTMENT OF TRANSPORTATION

R. Manzanarez
PROJECT ENGINEER

BRIDGE NO. 34-0006L/R
KILOMETER POST 13.2/13.9

SAN FRANCISCO OAKLAND BAY BRIDGE
EAST SPAN SEISMIC SAFETY PROJECT
SELF-ANCHORED SUSPENSION BRIDGE
(SUPERSTRUCTURE & TOWER)

EAST CABLE SHROUD DETAILS NO. 1

Rev. Date: 5-18-98

ORIGINAL SCALE IN MILLIMETERS FOR REDUCED PLANS 0 10 20 30 40 50 60 70 80 90 100

CU 04
EA 0120F1

DISREGARD PRINTS BEARING EARLIER REVISION DATES

REVISION DATES (PRELIMINARY STAGE ONLY): 08/07/99 05/31/01 04/08/02 07/01/02 12/19/02

SHEET 393R1 OF

FILE => I:\bb\04-012001\sas\contract plans and cco\cco\cco#185\6-revision 12-02-11\dgn\agshr05.dgn

100 % PS&E

USERNAME => DWinrow DATE PLOTTED => 02 DEC 2011 TIME PLOTTED => 14:26:06