Caltrans now has a web site! To get to the web site, go to: http://www.dot.ca.gov

Caltrans Metric

DIST.	COUNTY	ROUTE	KILOMETER POST TOTAL PROJECT	SHEET NO.	TOTAL SHEETS
04	SF	80	13.2/13.9	732R2	1204

George Baker
REGISTERED ENGINEER - CIVIL
12-6-04
PLANS APPROVAL DATE

REGISTERED PROFESSIONAL ENGINEER George S. Baker No. C 57112 Exp. 12/31/05 CIVIL STATE OF CALIFORNIA

The State of California or its officers or agents shall not be responsible for the accuracy or completeness of electronic copies of this plan sheet.

T.Y. LIN / MOFFATT & NICHOL
825 BATTERY STREET
SAN FRANCISCO, CA 94111

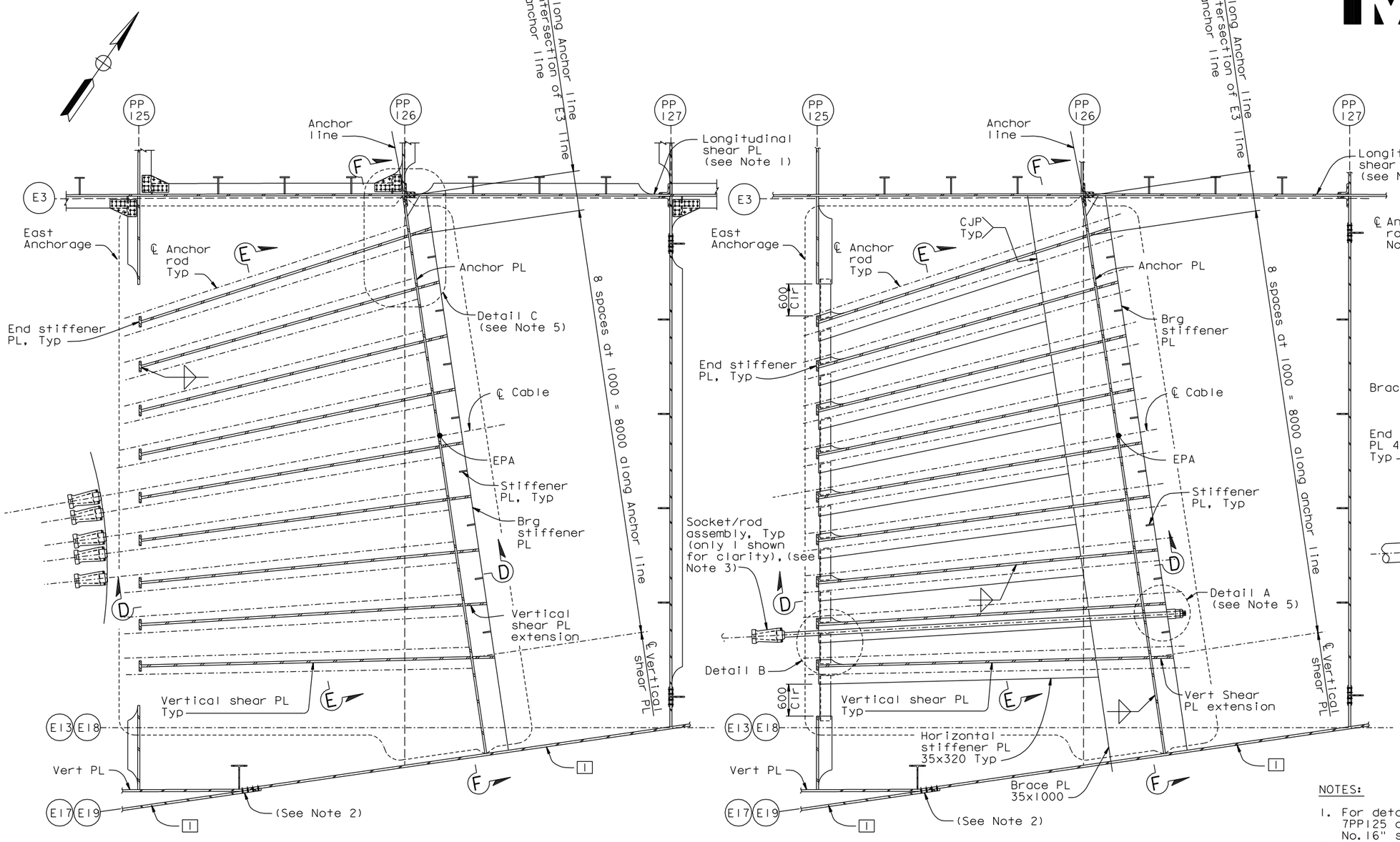

AT LEVEL OF TYPICAL BEARING STIFFENER

AT LEVEL OF BRACE PLATE

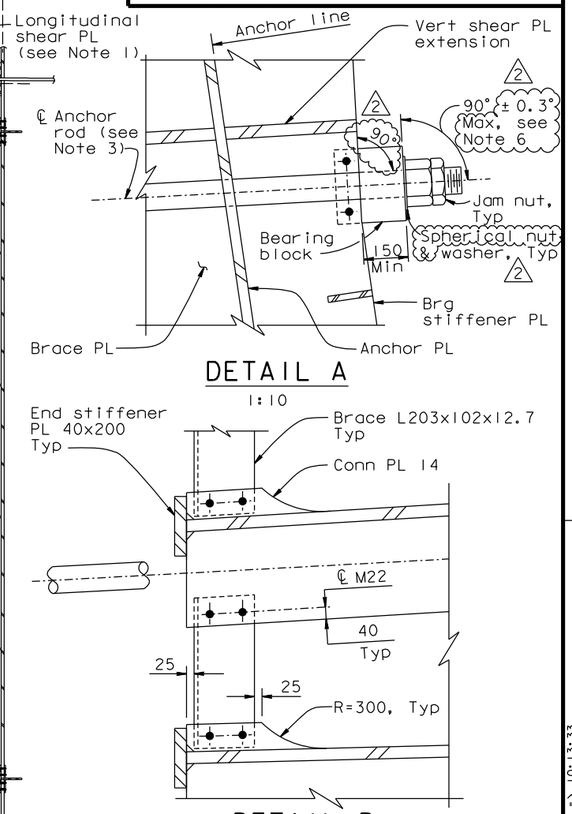

DETAIL A
1:10

DETAIL B
1:10

NOTES:

1. For details of longitudinal shear plate between 7PP125 and PP127, see "Girder At East Transition No.16" sheet.
2. For details of splice connection at girder plate 1 and vertical plate convergence, see "Girder At East Transition Details" sheets.
3. For strand socket and anchor rod details, see "East Cable Anchorage Details" sheet.
4. For Detail C and Sections D-D, E-E and F-F, see "East Cable Anchorage "E" Line Layout No.3" sheet.
5. Machining of bearing stiffener not shown in plan view.

6. The bearing blocks shall be aligned with the bearing stiffener plates. The angle between the bearing block and the anchor rod may vary (up to 90° ± 0.3° Max) due to the averaging of the bearing stiffeners orientation across each row of anchors.

ALL DIMENSIONS ARE IN MILLIMETERS UNLESS OTHERWISE SHOWN

REGISTERED PROFESSIONAL ENGINEER Marwan N. Nader No. C 054426 Exp. 12/31/11 CIVIL STATE OF CALIFORNIA

FOR REVISIONS ONLY

CONTRACT CHANGE ORDER NO. _____
SHEET ___ OF ___

REQUESTS FOR INFORMATION NOT ADDRESSED IN THIS CCO REMAIN IN FORCE

PLAN SECTION C-C
1:40

100% PS&E

R. Valizadeh/V. Toan/Y.L./W.L./F.C.
DESIGN OVERSIGHT
Reza Valizadeh / Vong Toan / Y. Liu
SIGN OFF DATE 04/08/11

MARK	DATE	DESCRIPTIONS	BY	CH'D	CCO#
2	04/08/11	SUSPENSION CABLE MISCELLANEOUS DETAILS	GB	MN	185
1	01/28/11	MISCELLANEOUS CABLE SYSTEM DETAILS	GB	MN	37S1

REVISIONS

	BY	CHECKED
DESIGN	G. Baker	J. Kuliki
DETAILS	M. Gulyas	T. McMeans
QUANTITIES	M. Gulyas	M. Roberts

PREPARED FOR THE STATE OF CALIFORNIA DEPARTMENT OF TRANSPORTATION

R. Manzanarez
PROJECT ENGINEER

BRIDGE NO. 34-0006L/R
KILOMETER POST 13.2/13.9

SAN FRANCISCO OAKLAND BAY BRIDGE
EAST SPAN SEISMIC SAFETY PROJECT
SELF-ANCHORED SUSPENSION BRIDGE
(SUPERSTRUCTURE & TOWER)
EAST CABLE ANCHORAGE "E" LINE LAYOUT NO. 2

Rev. Date: 5-18-98

ORIGINAL SCALE IN MILLIMETERS FOR REDUCED PLANS 0 10 20 30 40 50 60 70 80 90 100

CU 04
EA 0120F1

DISREGARD PRINTS BEARING EARLIER REVISION DATES

REVISION DATES (PRELIMINARY STAGE ONLY) 01/15/99 05/15/99 08/02/99 05/31/01 04/08/02 07/01/02 12/19/02

SHEET 315R2 OF

FILE => I:\bb\04-0120F1\sas\contract plans and cco\cco\cco*185\4-update 04-08-11\dgn\agan105.dgn

USERNAME => DWinrow DATE PLOTTED => 07 APR 2011 TIME PLOTTED => 10:13:33