DIST.	COUNTY	ROUTE	KILOMETER POST TOTAL PROJECT	SHEET NO.	TOTAL SHEETS
04	SF	80	13.2/13.9	736R3	1204

George Baker
REGISTERED ENGINEER - CIVIL
12-6-04
PLANS APPROVAL DATE

REGISTERED PROFESSIONAL ENGINEER George S. Baker No. C57112 Exp. 12/31/05 CIVIL STATE OF CALIFORNIA

The State of California or its officers or agents shall not be responsible for the accuracy or completeness of electronic copies of this plan sheet.

T.Y. LIN / MOFFATT & NICHOL
825 BATTERY STREET
SAN FRANCISCO, CA 94111

Caltrans now has a web site! To get to the web site, go to: http://www.dot.ca.gov

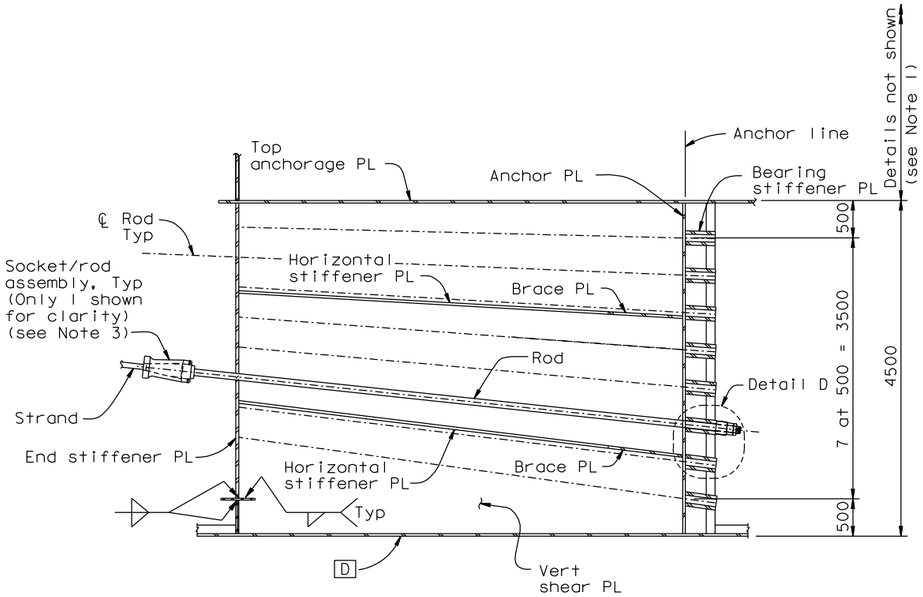

SECTION D-D
1:40

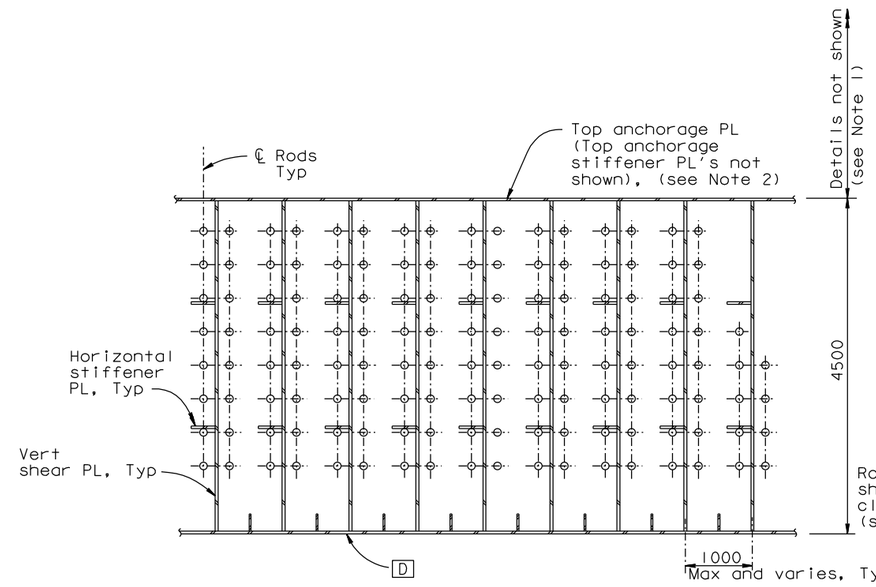

SECTION E-E
1:40

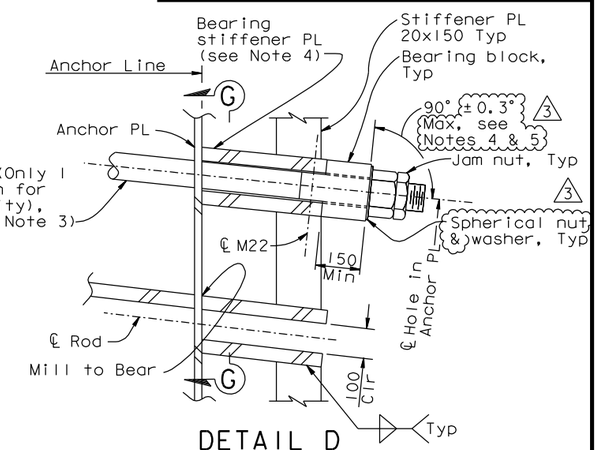

DETAIL D
1:10

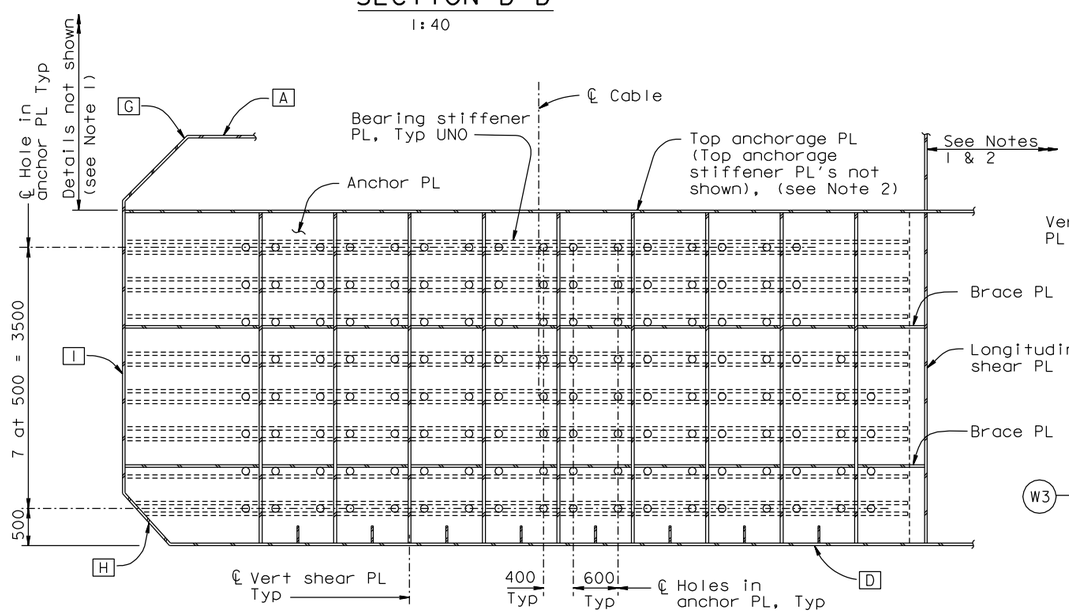

SECTION F-F
1:40

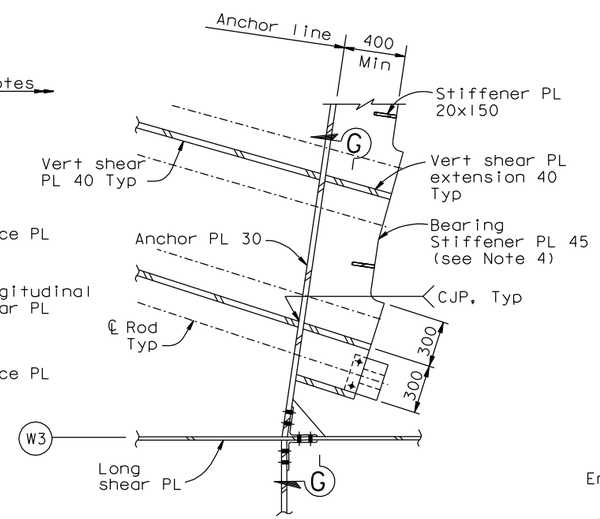

DETAIL C
1:20

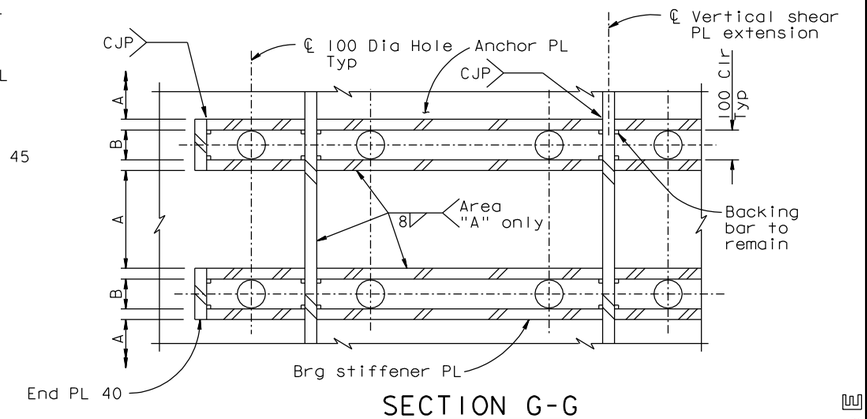

SECTION G-G
1:10

NOTES:

1. For girder details not shown, see "Girder At East Transition" sheets.
2. For top anchorage plate details not shown, see "Crossbeam At East Anchorage" and "Girder At East Transition" sheets.
3. For strand socket, transition anchor rod and bearing block details, see "East Cable Anchorage Details" sheet.
4. Bearing stiffeners plates shall be machined to level the bearing block under the nut. Washers may be beveled to 1°. The installation tolerance for the bearing block/anchor rod angle is ±1°. Also see Note 6 on "East Cable Anchorage "W" Line Layout No.2" sheet.
5. The bearing blocks shall be aligned with the bearing stiffener plates. The angle between the bearing block and the anchor rod may vary (up to 90° ±0.3° Max) due to the averaging of the bearing stiffeners across each row of anchors.

ALL DIMENSIONS ARE IN MILLIMETERS UNLESS OTHERWISE SHOWN

Daniel J. Turner
REGISTERED PROFESSIONAL ENGINEER Daniel J. Turner No. C 65033 Exp. 06/30/11 CIVIL STATE OF CALIFORNIA
FOR REVISIONS ONLY

CONTRACT CHANGE ORDER NO. _____
SHEET ____ OF ____

REQUESTS FOR INFORMATION NOT ADDRESSED IN THIS CCO REMAIN IN FORCE

MARK	DATE	DESCRIPTIONS	BY	CH'D	CCO#
3	03/25/11	SUSPENSION CABLE MISCELLANEOUS DETAILS	DT	GB	185
2	01/28/11	MISCELLANEOUS CABLE SYSTEM DETAILS	DT	GB	37S1
1	08/28/09	BEARING BLOCKS	DT	GB	78

REVISIONS

R. Valizadeh/V. Toan/Y.L./W.L./F.C.
DESIGN OVERSIGHT
Roya Valizadeh / Vong Toan / Y. Liu
SIGN OFF DATE 03/29/11

	BY	CHECKED
DESIGN	G. Baker	J. Kuliki
DETAILS	M. Gulyas	T. McMeans
QUANTITIES	M. Gulyas	M. Roberts

PREPARED FOR THE STATE OF CALIFORNIA DEPARTMENT OF TRANSPORTATION

R. Manzanarez
PROJECT ENGINEER

BRIDGE NO. 34-0006L/R
KILOMETER POST 13.2/13.9

SAN FRANCISCO OAKLAND BAY BRIDGE
EAST SPAN SEISMIC SAFETY PROJECT
SELF-ANCHORED SUSPENSION BRIDGE
(SUPERSTRUCTURE & TOWER)

EAST CABLE ANCHORAGE "W" LINE LAYOUT NO. 3

Rev. Date: 5-18-98

ORIGINAL SCALE IN MILLIMETERS FOR REDUCED PLANS 0 10 20 30 40 50 60 70 80 90 100

CU 04
EA 0120F1

DISREGARD PRINTS BEARING EARLIER REVISION DATES

REVISION DATES (PRELIMINARY STAGE ONLY) 01/18/99 05/15/99 08/02/99 05/14/01 04/08/02 07/01/02 12/18/02 11/13/05

SHEET 319R3 OF

FILE => I:\bb\04-012001\sas\contract plans and cco\cco\cco#185\3-revision 03-25-11\dgn\agan109.dgn

100% PS&E

USERNAME => DWinrow DATE PLOTTED => 25 MAR 2011 TIME PLOTTED => 08:50:47