DIST.	COUNTY	ROUTE	KILOMETER POST TOTAL PROJECT	SHEET NO.	TOTAL SHEETS
04	SF	80	13.2/13.9	762R4	1204

Caltrans Metric

George Baker
REGISTERED ENGINEER - CIVIL
12-6-04
PLANS APPROVAL DATE

REGISTERED PROFESSIONAL ENGINEER George S. Baker No. C 57112 Exp. 12/31/05 CIVIL STATE OF CALIFORNIA

The State of California or its officers or agents shall not be responsible for the accuracy or completeness of electronic copies of this plan sheet.

T.Y. LIN / MOFFATT & NICHOL
825 BATTERY STREET
SAN FRANCISCO, CA 94111

Caltrans now has a web site! To get to the web site, go to: http://www.dot.ca.gov

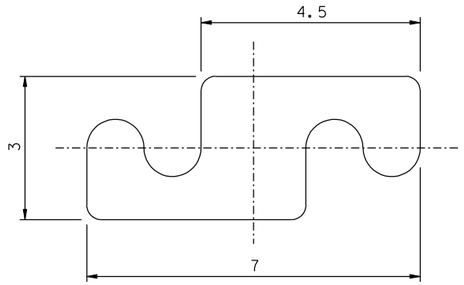

S-SHAPED WRAPPING WIRE
10:1

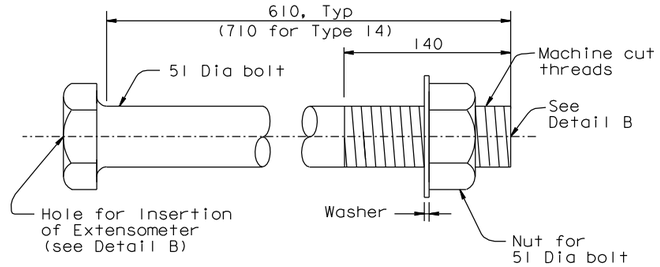

CABLE BAND BOLT
1:2.5

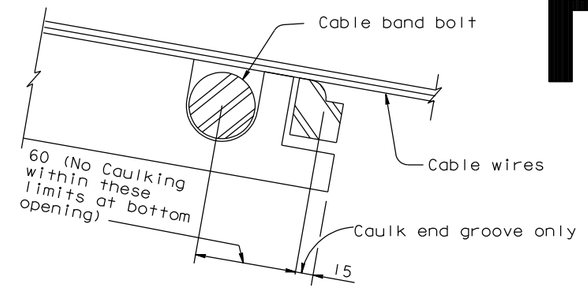

LOWER END CAULKING DETAIL
NTS

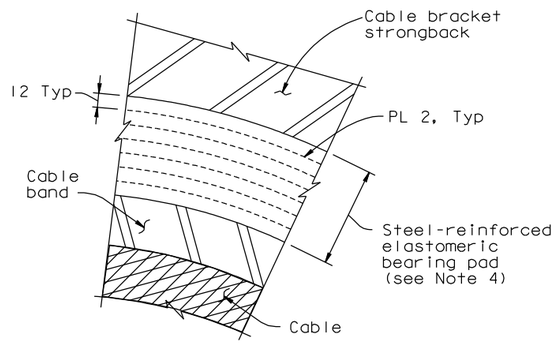

DETAIL A
1:2.5

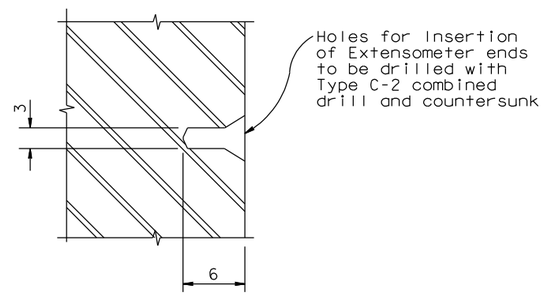

DETAIL B
NTS

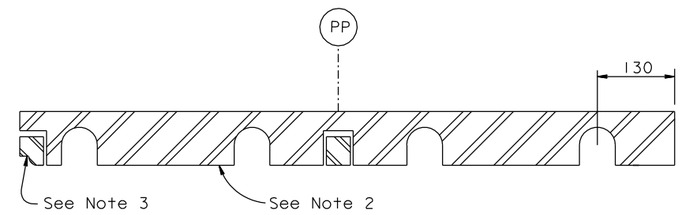

SECTION C-C
1:5

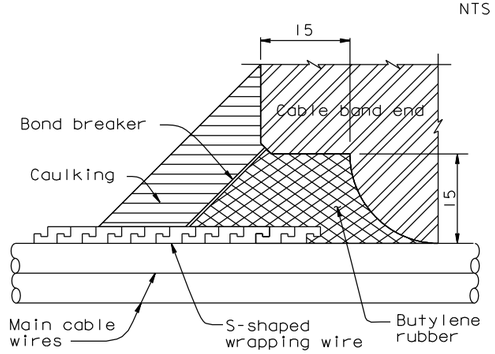

CAULKING GROOVE DETAIL
2:1 △3

△4 △3

NOTES:

1. For cable band bolts installation tension shall be 1.0 MN per bolt.
2. For typical details not shown, see "Cable Band Details No.3" sheet.
3. For other caulking groove details, see "Cable Band Details No.3" sheet.
4. Elastomeric bearing pad shall be vulcanized to both the strongback and the cable band.
5. For cable band bolt material, see "General Notes" sheets. △4 △3

REGISTERED PROFESSIONAL ENGINEER Marwan N. Nader No. C 054426 Exp. 12/31/13 CIVIL STATE OF CALIFORNIA

FOR REVISION △3 & △4 ONLY

REGISTERED PROFESSIONAL ENGINEER Daniel J. Turner No. C 65033 Exp. 06/30/13 CIVIL STATE OF CALIFORNIA

FOR REVISIONS △1 & △2 ONLY

CONTRACT CHANGE ORDER NO. ____
SHEET ____ OF ____

REQUESTS FOR INFORMATION NOT ADDRESSED IN THIS CCO REMAIN IN FORCE

MARK	DATE	DESCRIPTIONS	BY	CH'D	CCO#
△4	10/25/12	SUSPENSION CABLE MISCELLANEOUS DETAIL	GB	MN	185
△3	08/21/12	SUSPENSION CABLE MISCELLANEOUS DETAIL	GB	MN	185
△2	07/07/08	CAULKING	AS	DT	66
△1	04/16/07	CABLE SYSTEM	GB	DT	37

REVISIONS

ALL DIMENSIONS ARE IN MILLIMETERS UNLESS OTHERWISE SHOWN

R. Valizadeh/V. Toan/Y.L./W.L./F.C.
DESIGN OVERSIGHT
SIGN OFF DATE 10/25/12

	BY	CHECKED
DESIGN	G. Baker	T. McMeans
DETAILS	S. Camo	P. Ritchie
QUANTITIES	C. Mauch	C. Mibelli

PREPARED FOR THE STATE OF CALIFORNIA DEPARTMENT OF TRANSPORTATION

R. Manzanarez
PROJECT ENGINEER

BRIDGE NO. 34-0006L/R
KILOMETER POST 13.2/13.9

SAN FRANCISCO OAKLAND BAY BRIDGE
EAST SPAN SEISMIC SAFETY PROJECT
SELF-ANCHORED SUSPENSION BRIDGE
(SUPERSTRUCTURE & TOWER)

CABLE BAND DETAILS NO.5

Rev. Date: 5-18-98

ORIGINAL SCALE IN MILLIMETERS FOR REDUCED PLANS 0 10 20 30 40 50 60 70 80 90 100

CU 04
EA 0120F1

DISREGARD PRINTS BEARING EARLIER REVISION DATES

REVISION DATES (PRELIMINARY STAGE ONLY) 05/30/99 08/02/99 05/31/01 04/08/02 07/01/02 12/19/02

SHEET 345R4 OF

FILE => L:\BB\04-012001\SAS\Contract Plans and CCO\CCO\CCO#185\12-Revision 10-25-12\DGN\agcbd05.dgn

USERNAME => DWinrow DATE PLOTTED => 25 OCT 2012 TIME PLOTTED => 13:06:23

100% PS&E