DIST.	COUNTY	ROUTE	KILOMETER POST TOTAL PROJECT	SHEET NO.	TOTAL SHEETS
04	SF	80	13.2/13.9	760R1	1204

Caltrans Metric

George Baker
REGISTERED ENGINEER - CIVIL
12-6-04
PLANS APPROVAL DATE

REGISTERED PROFESSIONAL ENGINEER George S. Baker No. C57112 Exp. 12/31/05 CIVIL STATE OF CALIFORNIA

The State of California or its officers or agents shall not be responsible for the accuracy or completeness of electronic copies of this plan sheet.

T.Y. LIN / MOFFATT & NICHOL
825 BATTERY STREET
SAN FRANCISCO, CA 94111

Caltrans now has a web site! To get to the web site, go to: http://www.dot.ca.gov

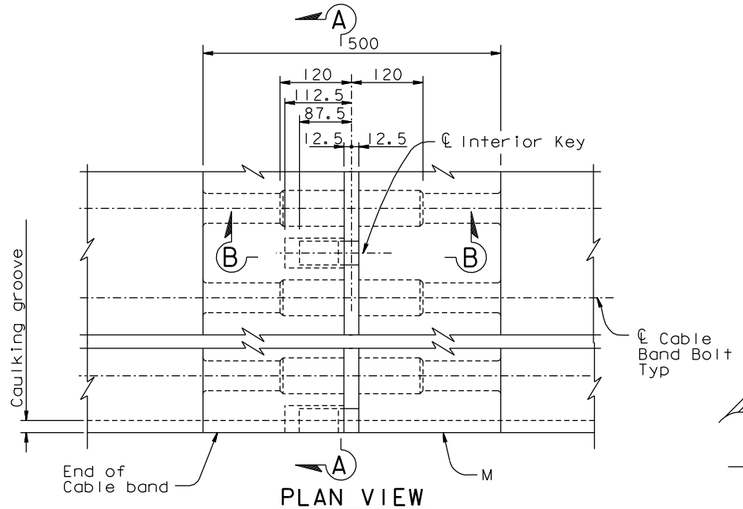

PLAN VIEW

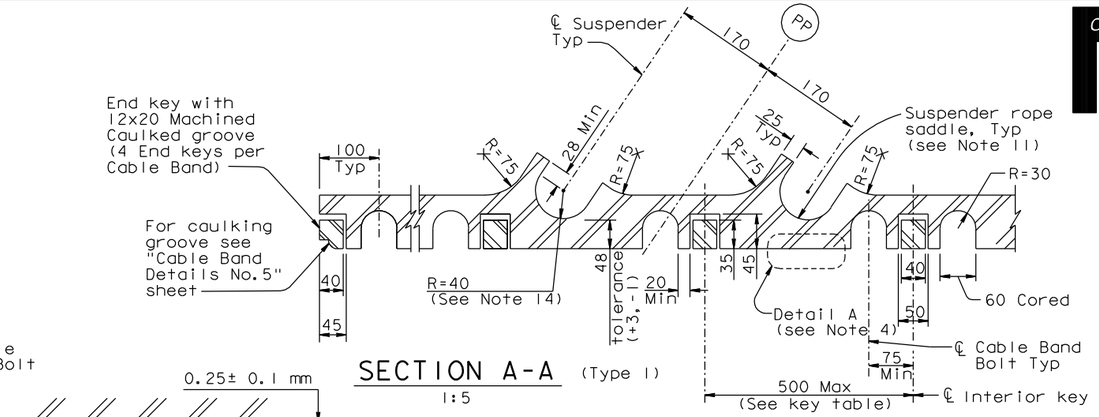

SECTION A-A (Type 1)
1:5

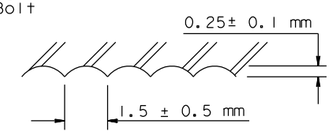

DETAIL A

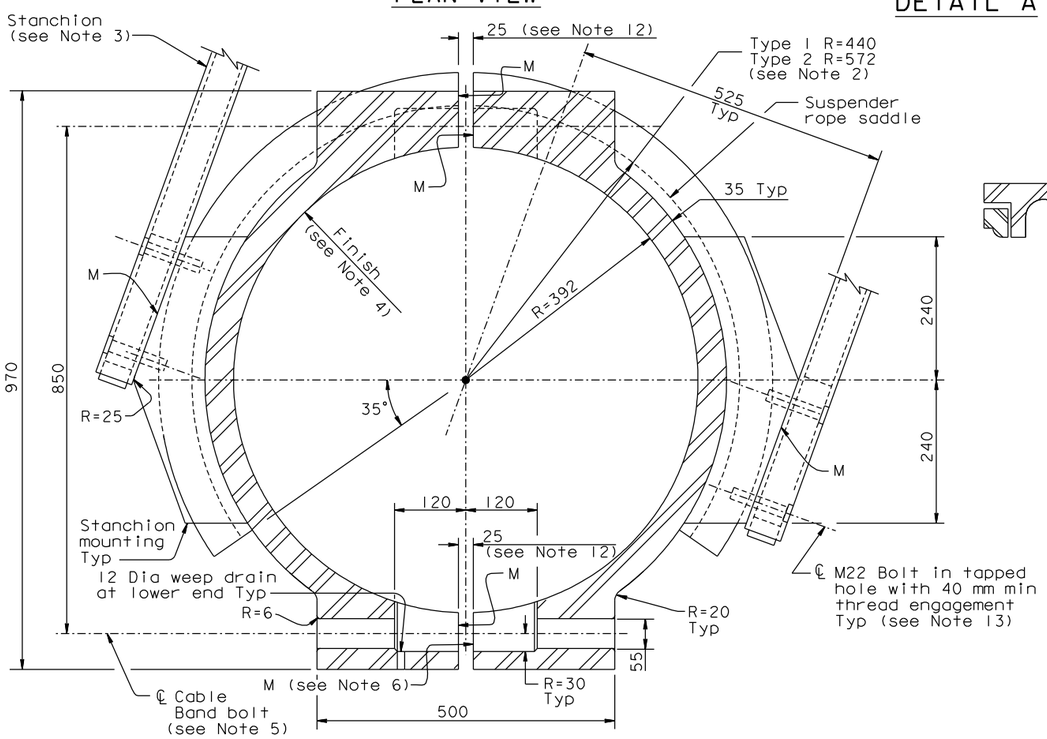

SECTION

TYPICAL CABLE BAND DETAIL
1:5

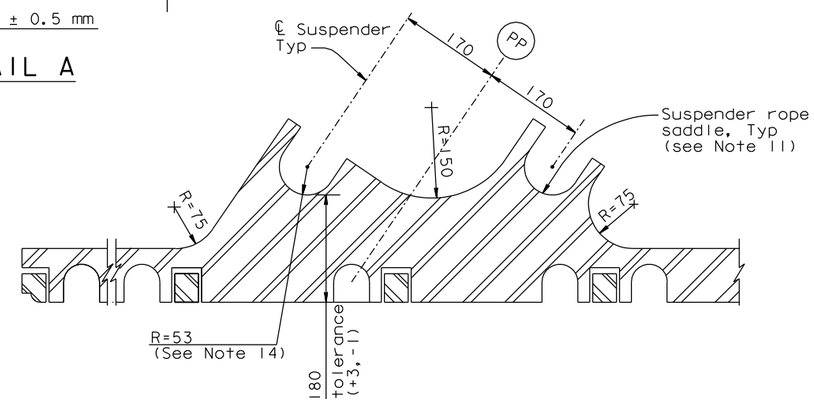

SECTION A-A (Type 2)
1:5
For details not shown, see Type 1

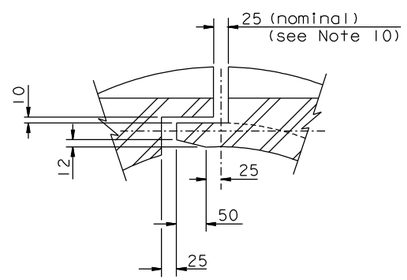

JOINT AT KEY

SECTION B-B
1:5

KEY TABLE	
Cable Band Type	No of Interior Keys
1	2
2	2
3	2
4	4
5	6
6	6
7	6
8	8
9	8
10	10
11	10
13	12
14	6
15	2
16	2

NOTES:

1. For cable band types B14 and B15, see "Cable Band Details No.4" sheet.
2. For location of suspender types 1 and 2, see "Suspender Layout No.1" sheet.
3. Stanchions and other handrope fittings shall be connected to stanchion mounting. Bolt holes shall be provided in stanchion mounting as required. For handrope stanchions and fittings, see "Cable Handrope Details" sheets.
4. Cable band bore shall be finished with 650 cuts per meter with depth of 0.25 mm at right angles to the cable axis, as shown in Detail A.
5. For cable band bolts, see "Cable Band Details No.5" sheet. For materials of cable and bolts, see the "General Notes" sheets.
6. All surfaces identified with the letter "M" shall be spacially placed in the plane identified, within 2 mm. These surfaces shall not deviate in flatness from the specified plane more than ±0.0015 times the length over which the flatness is measured. Surface roughness of exterior surfaces with no machining shall be finished to ANSI 1000.
7. Surfaces where bolt heads or nuts bear shall have a surface roughness finished to ANSI 500.
8. Cored surfaces need not be machined, but shall be spacially located within ±2 mm of their prescribed location. The "Cored" radius tolerance shall be +2 mm. Cored roughness shall be finished to ANSI 1000.
9. Length difference between split halves shall be ±1 mm.
10. Difference along length of longitudinal gap as erected shall be ±1.5 mm per meter.
11. Surface roughness of suspender rope saddle grooves shall be ANSI 500. These surfaces shall be metallized with coating thickness not less than 0.4 mm.
12. The full depth of the opening between the cable band halves shall be sealed. For sealing details, see "Cable Band Details No.3A" sheet. The top opening shall be fully sealed. The bottom opening shall be fully sealed, except as shown in the Lower End Caulking Detail, see "Cable Band Details No.5" sheet.
13. All stanchion mountings shall be drilled and tapped in positions shown. Where stanchions are not used holes shall be filled with M22 bolts.
14. The Contractor shall size the suspender rope saddles to fit the actual installed rope sizes.

REGISTERED PROFESSIONAL ENGINEER Marwan N. Nader No. C 054426 Exp. 12/31/11 CIVIL STATE OF CALIFORNIA

FOR REVISIONS ONLY

CONTRACT CHANGE ORDER NO. _____
SHEET ____ OF ____

REQUESTS FOR INFORMATION NOT ADDRESSED IN THIS CCO REMAIN IN FORCE

ALL DIMENSIONS ARE IN MILLIMETERS UNLESS OTHERWISE SHOWN

R. Valizadeh/V. Toan/Y.L./W.L./F.C.
DESIGN OVERSIGHT
Rza Valizadeh / Vong Toan / Y. Liu
SIGN OFF DATE 07/15/11

MARK	DATE	DESCRIPTIONS	BY	CH'D	CCO#
1	07/15/11	SUSPENSION CABLE MISCELLANEOUS DETAILS	GB	MN	185

REVISIONS

	BY	CHECKED
DESIGN	G. Baker	T. McMeans
DETAILS	S. Camo	P. Ritchie
QUANTITIES	C. Mauch	C. Mibelli

PREPARED FOR THE STATE OF CALIFORNIA DEPARTMENT OF TRANSPORTATION

R. Manzanarez
PROJECT ENGINEER

BRIDGE NO. 34-0006L/R
KILOMETER POST 13.2/13.9

SAN FRANCISCO OAKLAND BAY BRIDGE
EAST SPAN SEISMIC SAFETY PROJECT
SELF-ANCHORED SUSPENSION BRIDGE
(SUPERSTRUCTURE & TOWER)

CABLE BAND DETAILS NO.3

Rev. Date: 5-18-98

ORIGINAL SCALE IN MILLIMETERS FOR REDUCED PLANS 0 10 20 30 40 50 60 70 80 90 100

CU 04
EA 0120F1

DISREGARD PRINTS BEARING EARLIER REVISION DATES 01/15/99 05/15/99 08/02/99 05/31/01 04/08/02 07/01/02 12/19/02

SHEET 343R1 OF

FILE => I:\bb\04-012001\sas\contract plans and cco\cco\cco#185\5-update 07-15-11\dgn\agcbd03.dgn

USERNAME => DWinrow DATE PLOTTED => 15 JUL 2011 TIME PLOTTED => 13:45:27

100 % PS&E