DIST.	COUNTY	ROUTE	KILOMETER POST TOTAL PROJECT	SHEET NO.	TOTAL SHEETS
04	SF	80	13.2/13.9	1159R3	1204

Caltrans Metric

REGISTERED ENGINEER - MECHANICAL
12-6-04
PLANS APPROVAL DATE

REGISTERED PROFESSIONAL ENGINEER Roupen Donikian No. C 56519 Exp. 06/30/09 CIVIL STATE OF CALIFORNIA

The State of California or its officers or agents shall not be responsible for the accuracy or completeness of electronic copies of this plan sheet.

T.Y. LIN / MOFFATT & NICHOL
825 BATTERY STREET
SAN FRANCISCO, CA 94111

Caltrans now has a web site! To get to the web site, go to: http://www.dot.ca.gov

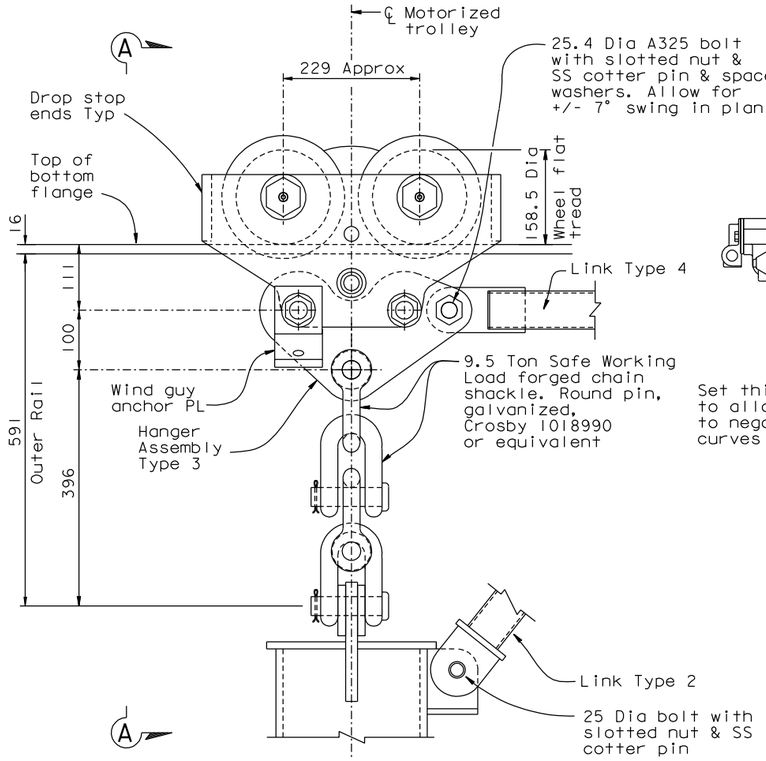

INNER RAIL MOTORIZED TROLLEY DETAIL

1:5 (2 Required)

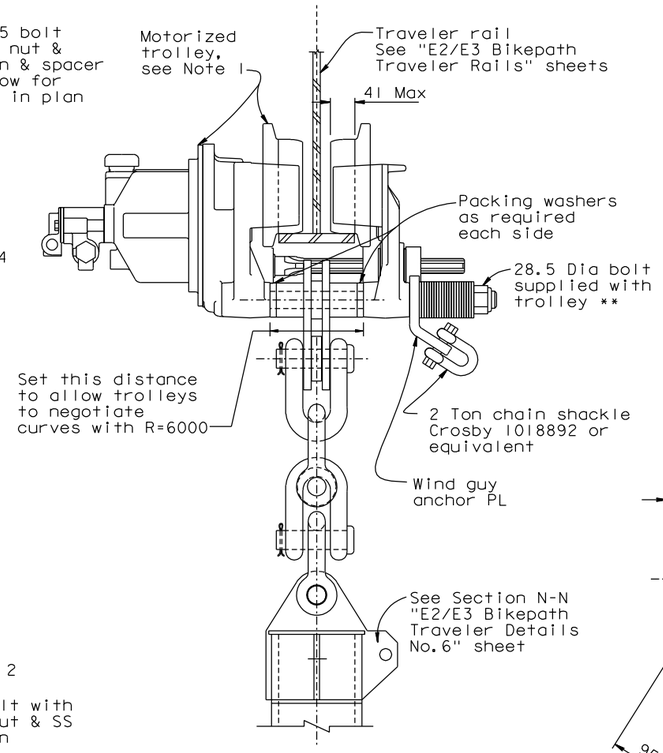

SECTION A-A

1:5

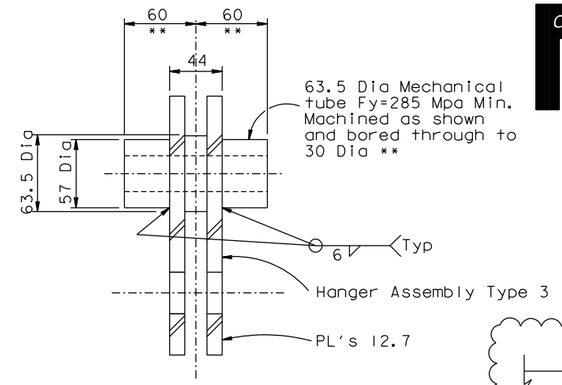

SECTION B-B

1:2.5

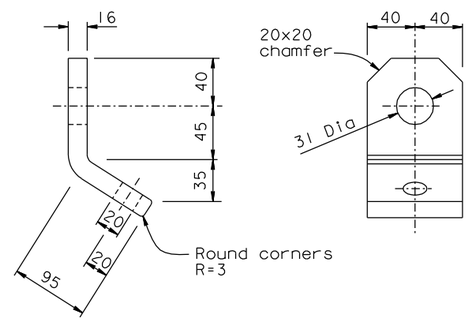

WIND GUY ANCHOR PLATE DETAIL

1:2.5

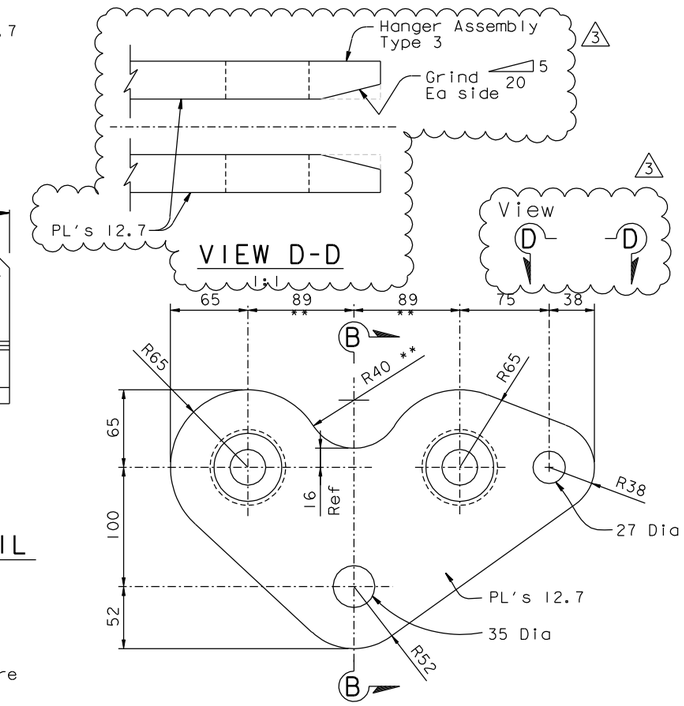

HANGER ASSEMBLY TYPE 3

1:2.5 (2 Required)

** Adapt dimensions noted thus to actual measured dimensions of the motorized trolleys

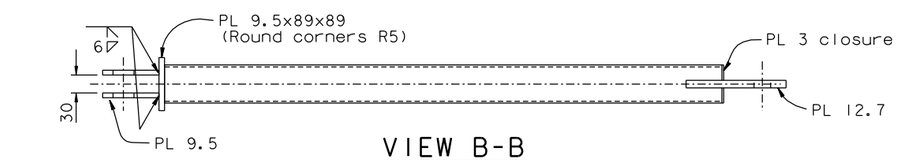

VIEW B-B

1:5

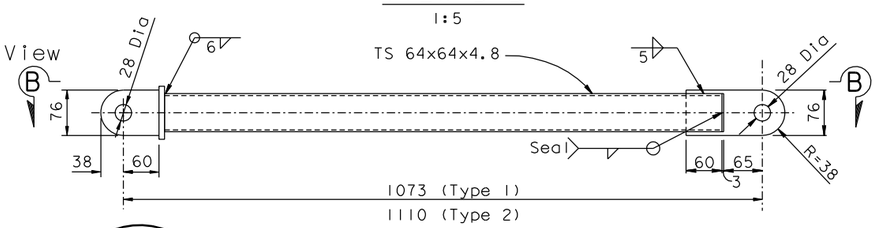

LINK TYPE 1 & 2

See Note 2

1:5
(2 required Type 1)
(2 required Type 2)

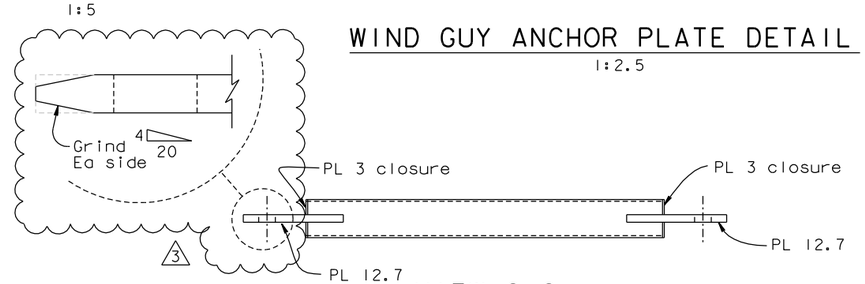

VIEW C-C

1:5

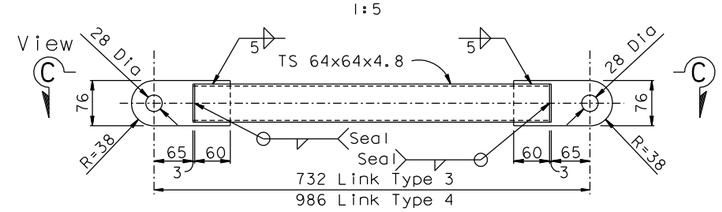

LINK TYPE 3 & 4

(See Note 2)

1:5
(2 required Type 3)
(2 required Type 4)

NOTES:

1. The motorized trolley shall be Ingersoll Rand Model ATET-MR 3/6 piston air motor driven trolley rated for 3000 Kg for "Man Rider" use. Wheels shall be flat tread type.
2. For motor controls, see E2/E3 "Bikepath Traveler Air system" sheet.
3. Verify actual dimensions of equipment supplied by Ingersoll Rand and sdjust dimensions as required.
4. For traveler rails, see "E2/E3 Bikepath Traveler Rails" sheets.
5. Quantities given are per one traveler.

REGISTERED PROFESSIONAL ENGINEER Tien Hung Ho No. C 43990 Exp. 06/30/13 CIVIL STATE OF CALIFORNIA

CONTRACT CHANGE ORDER NO. _____
SHEET ____ OF ____

FOR REVISIONS 2 & 3 ONLY

REQUESTS FOR INFORMATION NOT ADDRESSED IN THIS CCO REMAIN IN FORCE

REVISION 2 SUPERSEDES REVISION 1

ALL DIMENSIONS ARE IN MILLIMETERS UNLESS OTHERWISE SHOWN

MARK	DATE	DESCRIPTIONS	BY	CH'D	CCO#
3	01/06/12	MISCELLANEOUS TRAVELER MODIFICATIONS	AB	TH	183S1
2	06/19/09	TRAVELER MODIFICATIONS	TH	AS	24S1
1	07/20/07	RAIL CHANGE & MISCELLANEOUS DETAILS	RD	NV	24

REVISIONS

R. Valizadeh/V. Toan/Y.L./W.L./F.C.
DESIGN OVERSIGHT
SIGN OFF DATE 01/06/12

	BY	CHECKED
DESIGN	J. Otter	R. Donikian
DETAILS	J. Otter	M. Roberts
QUANTITIES	J. Otter	R. Roberts

PREPARED FOR THE STATE OF CALIFORNIA DEPARTMENT OF TRANSPORTATION

R. Manzanarez
PROJECT ENGINEER

BRIDGE NO. 34-0006L/R
KILOMETER POST 13.2/13.9

SAN FRANCISCO OAKLAND BAY BRIDGE
EAST SPAN SEISMIC SAFETY PROJECT
SELF-ANCHORED SUSPENSION BRIDGE
(SUPERSTRUCTURE & TOWER)

E2/E3 BIKEPATH TRAVELER MECHANICAL-01

Rev. Date: 5-18-98

ORIGINAL SCALE IN MILLIMETERS FOR REDUCED PLANS 0 10 20 30 40 50 60 70 80 90 100

CU 04
EA 0120F1

DISREGARD PRINTS BEARING EARLIER REVISION DATES 04/15/02 01/07/02 12/19/02

SHEET 742R3 OF

FILE => I:\bb\04-01200I\sas\contract plans and cco\cco\cco#183s1\1-original 01-06-12\dgn\aktrv140.dgn

USERNAME => DWinrow DATE PLOTTED => 06 JAN 2012 TIME PLOTTED => 13:39:06

100% PS&E