DIST.	COUNTY	ROUTE	KILOMETER POST TOTAL PROJECT	SHEET NO.	TOTAL SHEETS
04	SF	80	13.2/13.9	1141R1	1204

Caltrans Metric

REGISTERED ENGINEER - CIVIL

12-6-04
PLANS APPROVAL DATE

The State of California or its officers or agents shall not be responsible for the accuracy or completeness of electronic copies of this plan sheet.

REGISTERED PROFESSIONAL ENGINEER Rafael Manzanarez No. C 36842 Exp. 6/30/12 CIVIL STATE OF CALIFORNIA

T.Y. LIN / MOFFATT & NICHOL
825 BATTERY STREET
SAN FRANCISCO, CA 94111

Caltrans now has a web site! To get to the web site, go to: http://www.dot.ca.gov

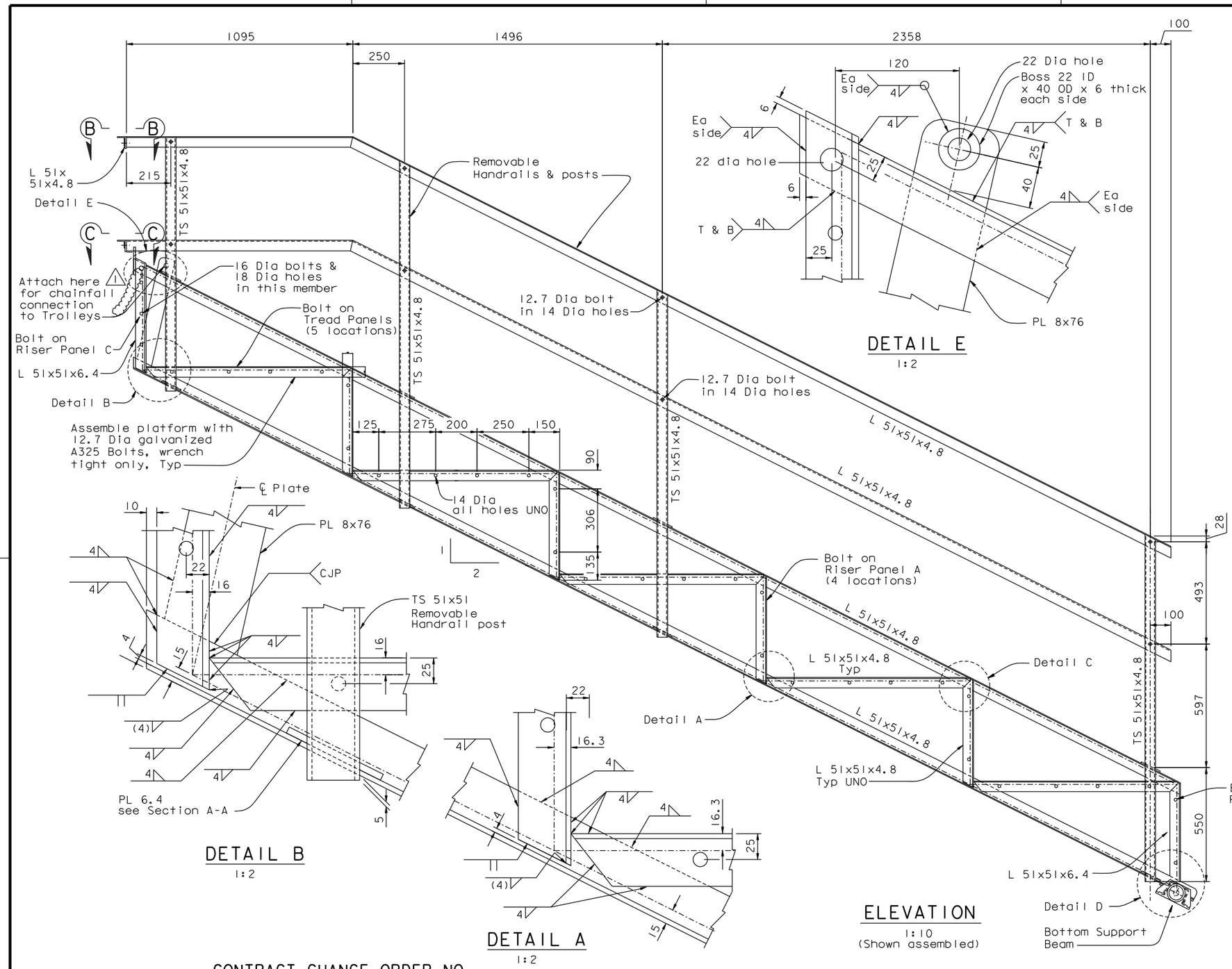

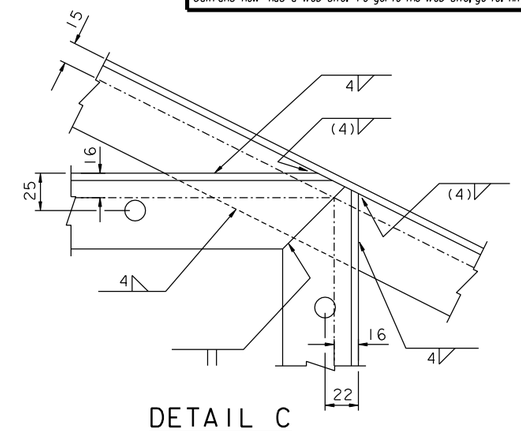

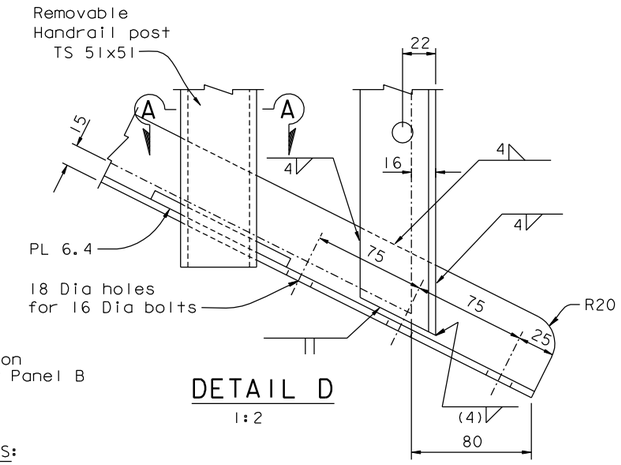

NOTES:

1. See "Traveler Supplementary Platform-01" sheet for notes.
2. For Section A-A and riser panels, see "Traveler Supplementary Platform-03" sheet.
3. For Sections B-B and C-C, see "Traveler Supplementary Platform-04" sheet.
4. For Bottom Support Beam, see "Traveler Supplementary Platform - 05" sheet.

CONTRACT CHANGE ORDER NO. ____
SHEET ___ OF ___

REQUESTS FOR INFORMATION NOT ADDRESSED IN THIS CCO REMAIN IN FORCE

ALL DIMENSIONS ARE IN MILLIMETERS UNLESS OTHERWISE SHOWN

R. Valizadeh/V. Toan/Y.L./W.L./F.C.
DESIGN OVERSIGHT
SIGN OFF DATE 03/09/12

MARK	DATE	DESCRIPTIONS	BY	CH'D	CCO#
1	03/09/12	MISCELLANEOUS TRAVELER MODIFICATIONS	AB	RM	183S1

REVISIONS

DESIGN	BY J. Otter	CHECKED R. Manzanarez	
DETAILS	BY J. Otter	CHECKED J. Leventini	
QUANTITIES	BY J. Otter	CHECKED J. Leventini	

PREPARED FOR THE STATE OF CALIFORNIA DEPARTMENT OF TRANSPORTATION

R. Manzanarez
PROJECT ENGINEER

BRIDGE NO. 34-0006L/R
KILOMETER POST 13.2/13.9

SAN FRANCISCO OAKLAND BAY BRIDGE
EAST SPAN SEISMIC SAFETY PROJECT
SELF-ANCHORED SUSPENSION BRIDGE (SUPERSTRUCTURE & TOWER)

TRAVELER SUPPLEMENTARY PLATFORM-02

Rev. Date: 5-18-98

ORIGINAL SCALE IN MILLIMETERS FOR REDUCED PLANS 0 10 20 30 40 50 60 70 80 90 100

CU 04
EA 0120F1

DISREGARD PRINTS BEARING EARLIER REVISION DATES

REVISION DATES (PRELIMINARY STAGE ONLY) 04/19/02 01/09/02 12/19/02

SHEET 724R1 OF

FILE => L:\BB\04-012001\SAS\Contract Plans and CCO\CCO\CCO#183S1\7-Revision 03-09-12\DGN\aktrv125b.dgn

100% PS&E

USERNAME => DWinrow DATE PLOTTED => 09 MAR 2012 TIME PLOTTED => 10:13:41