DIST.	COUNTY	ROUTE	KILOMETER POST TOTAL PROJECT	SHEET NO.	TOTAL SHEETS
04	SF	80	13.2/13.9	1139S2	1204

REGISTERED ENGINEER CIVIL

01-06-12

PLANS APPROVAL DATE

REGISTERED PROFESSIONAL ENGINEER James P.Duxbury No. C 64677 Exp. 06/30/13 CIVIL STATE OF CALIFORNIA

The State of California or its officers or agents shall not be responsible for the accuracy or completeness of electronic copies of this plan sheet.

T.Y. LIN / MOFFATT & NICHOL
825 BATTERY STREET
SAN FRANCISCO, CA 94111

Caltrans now has a web site! To get to the web site, go to: http://www.dot.ca.gov

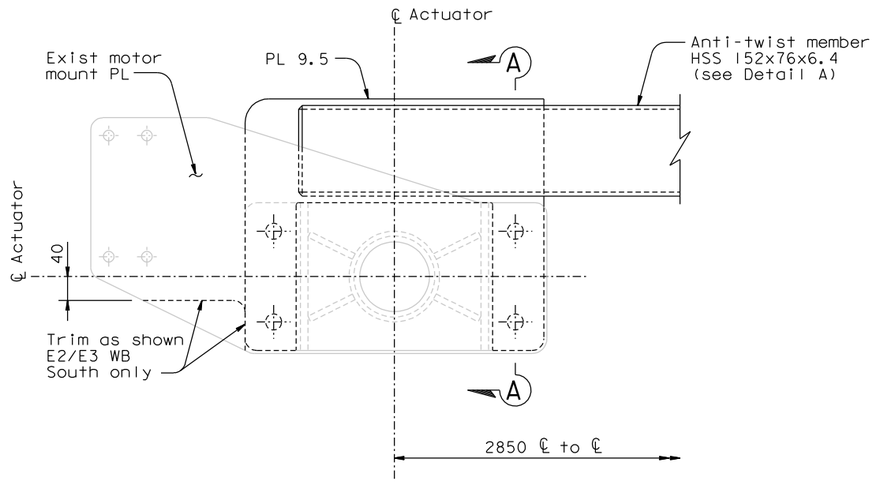

PLAN OF ASSEMBLY
1:5

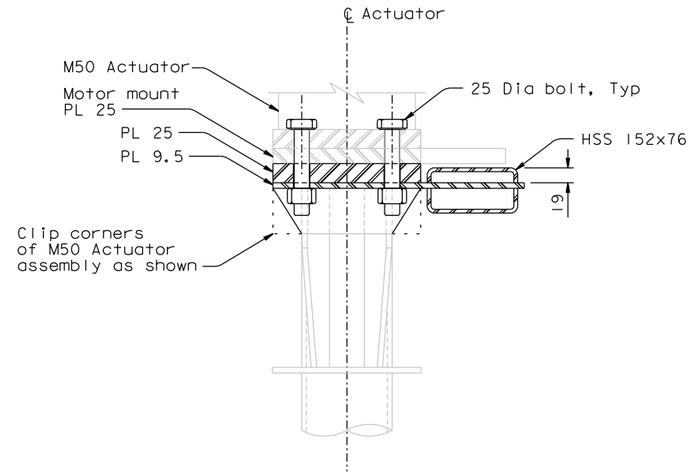

SECTION A-A
1:5

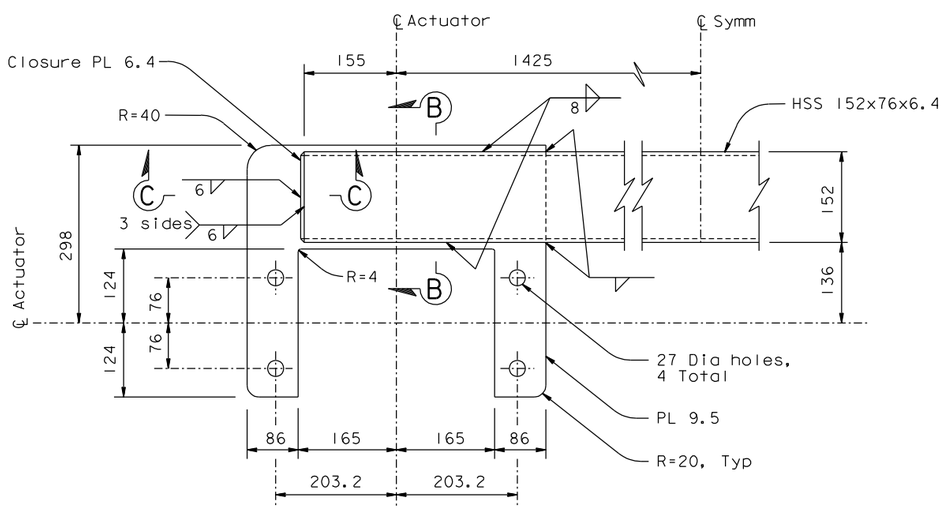

DETAIL A
1:5

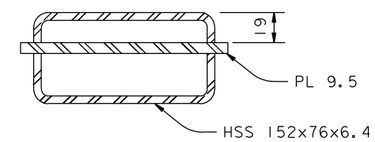

SECTION B-B
1:2.5

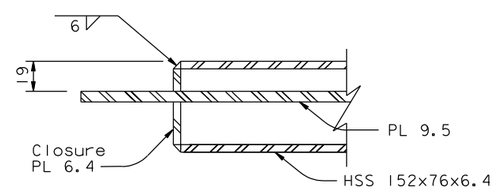

SECTION C-C
1:2.5

MODIFIED ANTI-TWIST MEMBER FOR M50 ACTUATORS

Required at all Actuators on E2/E3 Travelers
(Not required for SAS Travelers)

NOTES:

1. Contractor to confirm all dimensions and clearances.

CONTRACT CHANGE ORDER NO. _____
SHEET ____ OF ____

REQUESTS FOR INFORMATION NOT ADDRESSED IN THIS CCO REMAIN IN FORCE

ALL DIMENSIONS ARE IN MILLIMETERS UNLESS OTHERWISE SHOWN

R. Valizadeh/V. Toan/Y.L./W.L./F.C.
DESIGN OVERSIGHT
SIGN OFF DATE 01/06/12

MARK	DATE	DESCRIPTIONS	BY	CH'D	CCO#
0	01/06/12	MISCELLANEOUS TRAVELER MODIFICATIONS	AS	JD	183S1

REVISIONS

DESIGN	BY	A. Sanjines	CHECKED	J. Duxbury
DETAILS	BY	A. Sanjines	CHECKED	J. Duxbury
QUANTITIES	BY	A. Sanjines	CHECKED	J. Duxbury

PREPARED FOR THE STATE OF CALIFORNIA DEPARTMENT OF TRANSPORTATION

R. Manzanarez
PROJECT ENGINEER

BRIDGE NO. 34-0006L/R
KILOMETER POST 13.2/13.9

SAN FRANCISCO OAKLAND BAY BRIDGE
EAST SPAN SEISMIC SAFETY PROJECT
SELF-ANCHORED SUSPENSION BRIDGE
(SUPERSTRUCTURE & TOWER)

LINEAR ACTUATORS AND DRIVES-06

Rev. Date: 5-18-98

ORIGINAL SCALE IN MILLIMETERS FOR REDUCED PLANS 0 10 20 30 40 50 60 70 80 90 100

CU 04
EA 0120F1

DISREGARD PRINTS BEARING EARLIER REVISION DATES 01/06/12

REVISION DATES (PRELIMINARY STAGE ONLY)

SHEET 722S2 OF

FILE => L:\BB\04-012001\SAS\Contract Plans and CCO\CCO\CCO#183S1\2-Update 01-11-12\DGN\aktrv124d.dgn

100 % PS&E

USERNAME => grivera DATE PLOTTED => 30 JAN 2012 TIME PLOTTED => 09:15:38