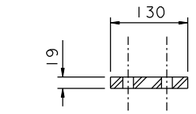

SECTION A-A

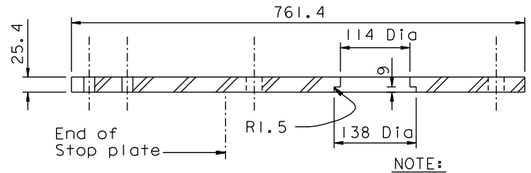

SECTION B-B

NOTE:
Adjust plate & bolt dimensions to suit actual Actuators & Drive motors chosen.

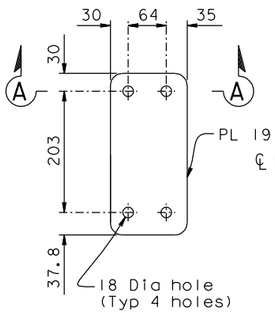

PLAN

SHIM PLATE

1:5

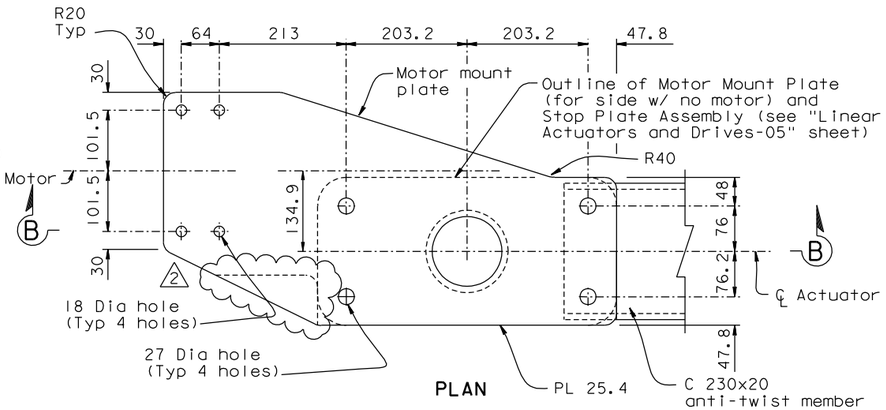

PLAN

MOTOR MOUNT & STOP PLATE

1:5

(See Note 1) 2

Flexible jaw
coupling
Max angular
offset - 1 degree
Max parallel
offset - 0.4 mm
Torque rating
300 N-m
Lovejoy L150 or
equivalent

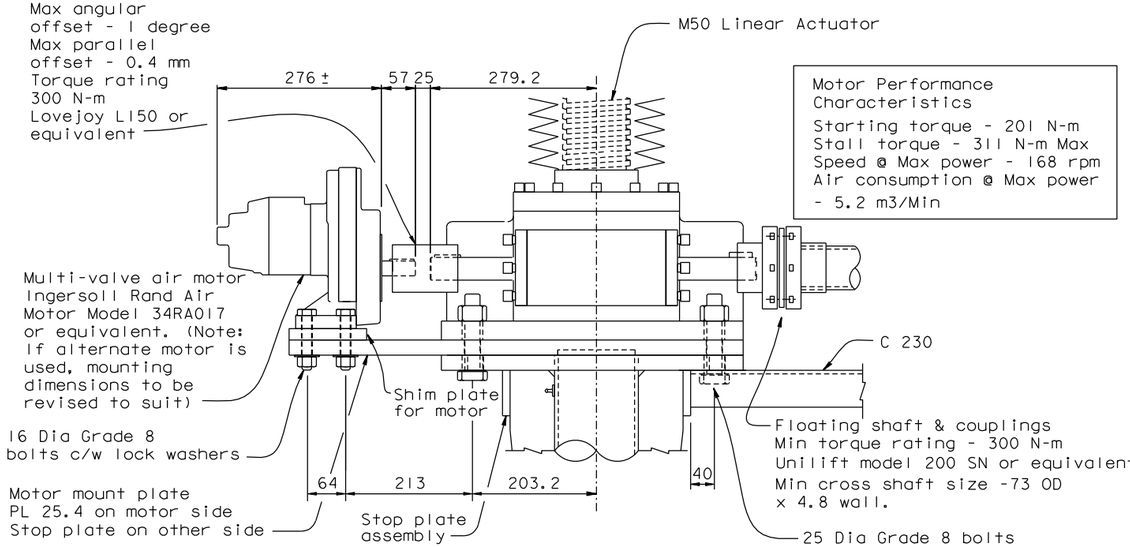

Motor Performance Characteristics
Starting torque - 201 N-m
Stall torque - 311 N-m Max
Speed @ Max power - 168 rpm
Air consumption @ Max power
- 5.2 m3/Min

ACTUATOR DRIVE FOR M50 ACTUATOR

1:5

(See Note 1) 2

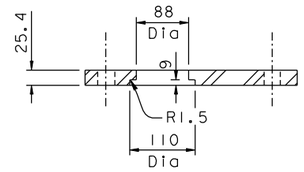

SECTION C-C

NOTE:
Adjust plate & bolt hole dimensions to suit actual Actuators & Drive Motors chosen.

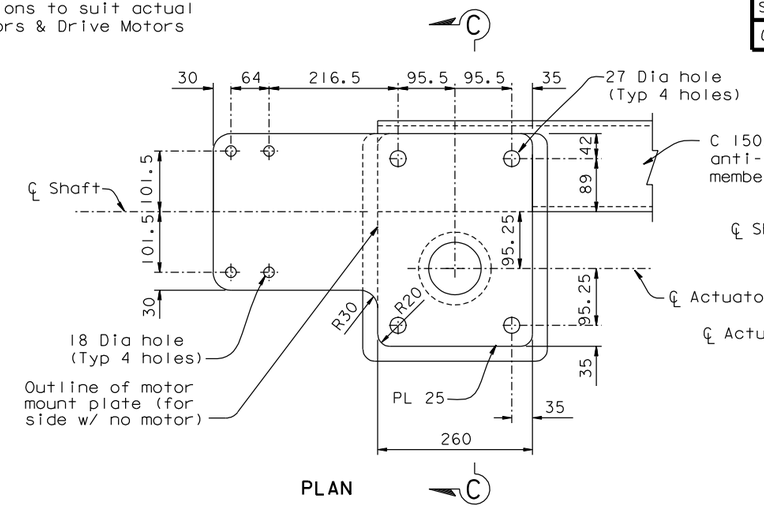

PLAN

MOTOR MOUNT PLATE

1:5

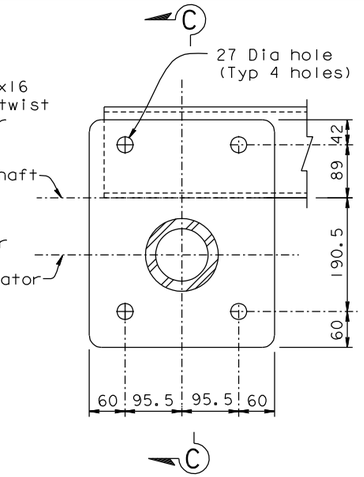

STOP PLATE

1:5

Flexible jaw
coupling
Max angular
offset - 1 degree
Max parallel
offset - 0.4 mm
Torque rating
200 N-m
Lovejoy L110 or
equivalent

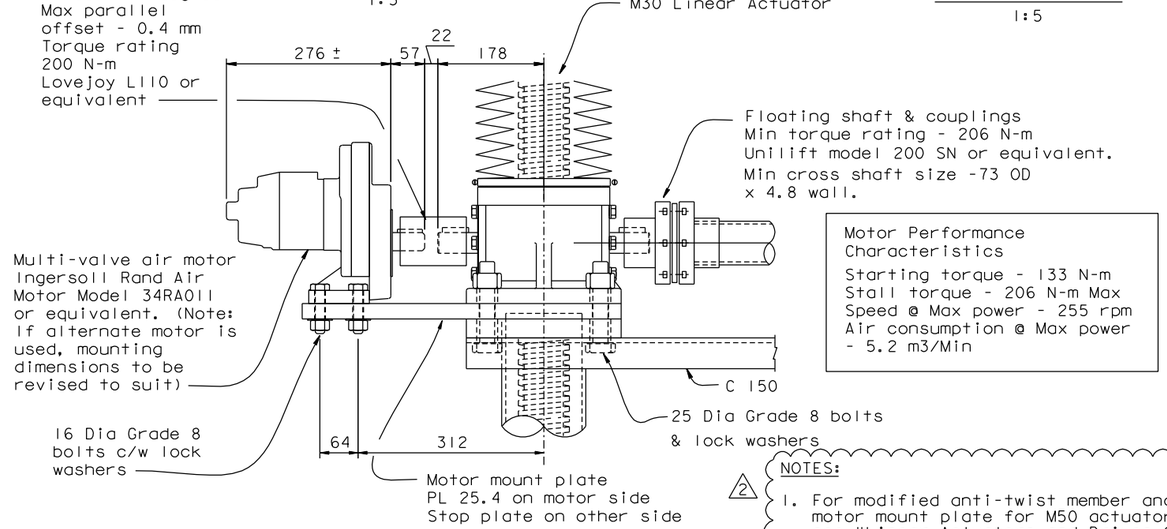

Motor Performance Characteristics
Starting torque - 133 N-m
Stall torque - 206 N-m Max
Speed @ Max power - 255 rpm
Air consumption @ Max power
- 5.2 m3/Min

ACTUATOR DRIVE FOR M30 ACTUATOR

1:5

ALL DIMENSIONS ARE IN
MILLIMETERS UNLESS OTHERWISE SHOWN

2 NOTES:
1. For modified anti-twist member and motor mount plate for M50 actuators, see "Linear Actuators and Drives-06" sheet.

DIST.	COUNTY	ROUTE	KILOMETER POST TOTAL PROJECT	SHEET NO.	TOTAL SHEETS
04	SF	80	13.2/13.9	1139R2	1204

Caltrans Metric

REGISTERED ENGINEER - MECHANICAL
12-6-04
PLANS APPROVAL DATE
REGISTERED PROFESSIONAL ENGINEER Roupen Donikian No. M 20235 Exp. 09/30/06 MECHANICAL STATE OF CALIFORNIA

The State of California or its officers or agents shall not be responsible for the accuracy or completeness of electronic copies of this plan sheet.

T.Y. LIN / MOFFATT & NICHOL
825 BATTERY STREET
SAN FRANCISCO, CA 94111

Caltrans now has a web site! To get to the web site, go to: http://www.dot.ca.gov

REGISTERED PROFESSIONAL ENGINEER James P.Duxbury No. C 64677 Exp. 06/30/13 CIVIL STATE OF CALIFORNIA

FOR REVISIONS ONLY

CONTRACT CHANGE ORDER NO. _____
SHEET ____ OF ____

REQUESTS FOR INFORMATION NOT ADDRESSED IN THIS CCO REMAIN IN FORCE

R. Valizadeh/V. Toan/Y.L./W.L./F.C.
DESIGN OVERSIGHT
Y. Liu
SIGN OFF DATE 01/06/12

MARK	DATE	DESCRIPTIONS	BY	CH'D	CCO#
2	01/06/12	MISCELLANEOUS TRAVELER MODIFICATIONS	AS	JD	183S1
1	02/25/11	TRAVELER MODIFICATIONS	AS	JD	183

REVISIONS

	BY	CHECKED
DESIGN	J. Otter	R. Donikian
DETAILS	J. Otter	R. Donikian
QUANTITIES	J. Otter	M. Roberts

PREPARED FOR THE STATE OF CALIFORNIA DEPARTMENT OF TRANSPORTATION

R. Manzanarez
PROJECT ENGINEER

BRIDGE NO. 34-0006L/R
KILOMETER POST 13.2/13.9

SAN FRANCISCO OAKLAND BAY BRIDGE
EAST SPAN SEISMIC SAFETY PROJECT
SELF-ANCHORED SUSPENSION BRIDGE
(SUPERSTRUCTURE & TOWER)

LINEAR ACTUATORS AND DRIVES-04

Rev. Date: 5-18-98

ORIGINAL SCALE IN MILLIMETERS FOR REDUCED PLANS 0 10 20 30 40 50 60 70 80 90 100

CU 04
EA 0120F1

DISREGARD PRINTS BEARING EARLIER REVISION DATES

REVISION DATES (PRELIMINARY STAGE ONLY) 04/15/02 07/09/02 12/19/02

SHEET 722R2 OF

FILE => I:\bb\04-012001\sas\contract plans and cco\cco\cco#183s1\1-original 01-06-12\dgn\aktrv125.dgn

USERNAME => DWinrow DATE PLOTTED => 06 JAN 2012 TIME PLOTTED => 13:38:01

100 % PS&E