DIST.	COUNTY	ROUTE	KILOMETER POST TOTAL PROJECT	SHEET NO.	TOTAL SHEETS
04	SF	80	13.2/13.9	1136S1	1204

Caltrans Metric

REGISTERED ENGINEER - CIVIL

01-06-12

PLANS APPROVAL DATE

REGISTERED PROFESSIONAL ENGINEER James P. Duxbury No. C 64677 Exp. 06/30/13 CIVIL STATE OF CALIFORNIA

The State of California or its officers or agents shall not be responsible for the accuracy or completeness of electronic copies of this plan sheet.

T.Y. LIN / MOFFATT & NICHOL
825 BATTERY STREET
SAN FRANCISCO, CA 94111

Caltrans now has a web site! To get to the web site, go to: http://www.dot.ca.gov

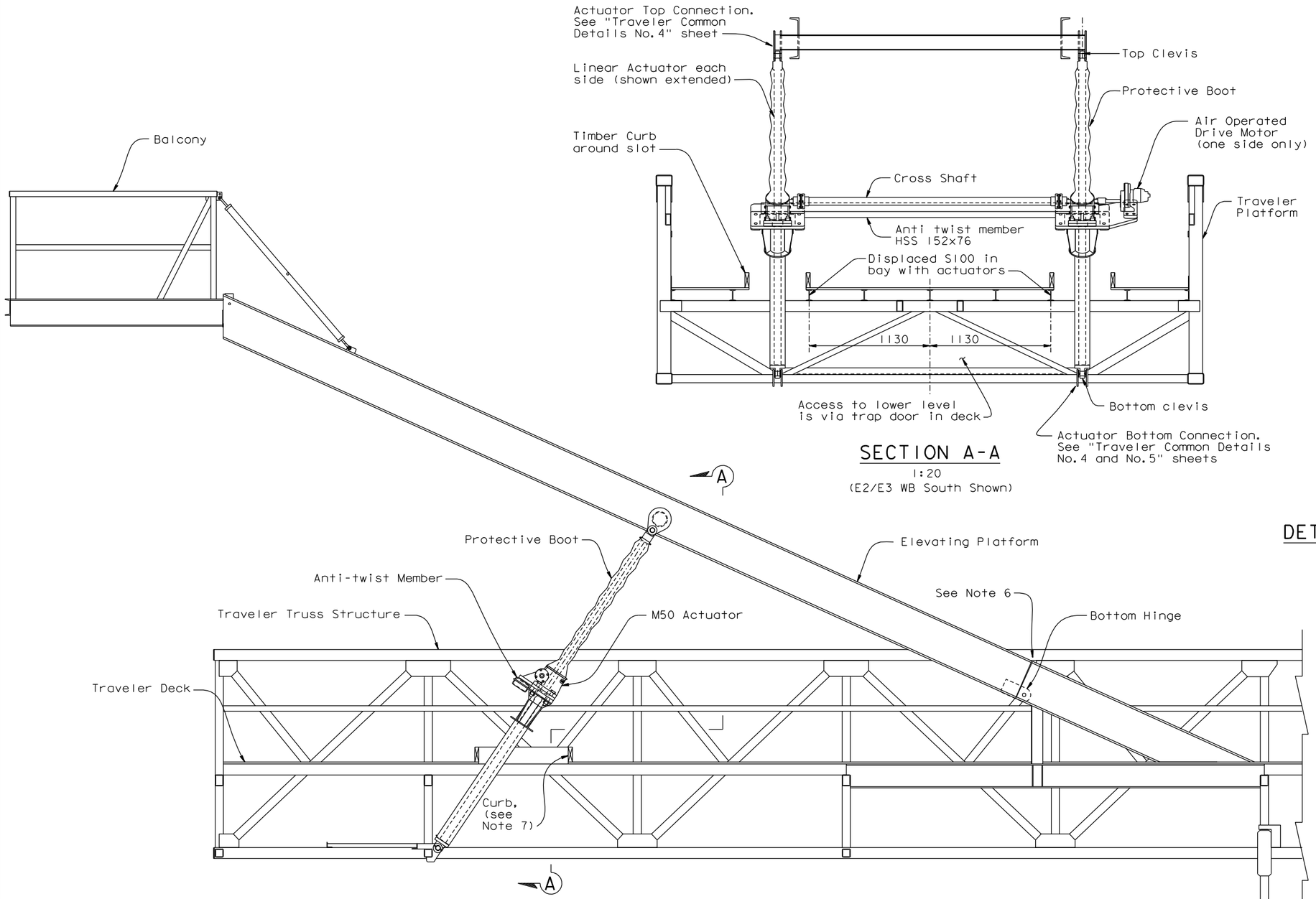

SECTION A-A

1:20

(E2/E3 WB South Shown)

LINEAR ACTUATOR ASSEMBLY - M50 ACTUATOR

(SHOWN ON THE E2/E3 WB TRAVELER)

1:20

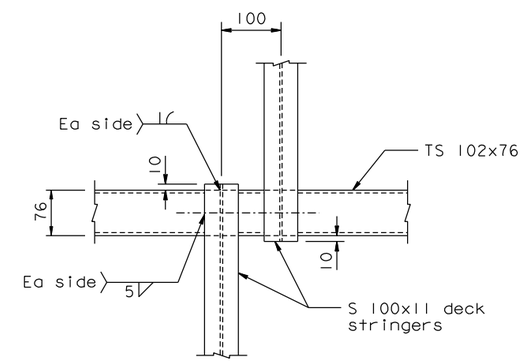

DETAIL OF DISPLACED FLOOR STRINGERS

1:5

(Applies Only at E2/E3 WB South)

(Shown at South end of bay, North end similar)

NOTES:

1. For anti-twist cross member with M50 Actuator, see "Linear Actuators And Drives - 06" sheet.
2. For Actuator notes, see "Linear Actuators And Drives - 02" sheet.
3. For Actuator details, see "Linear Actuators And Drives - 03" sheet.
4. For Actuator drives, see "Linear Actuators And Drives - 04" sheet.
5. Fabricator to verify all actuator lengths, actuator attachment positions, actuator travel requirements etc.
6. Actuator lengths & travels to be such that actuator reaches full extension & is arrested before the gap at the hinge closes tight.
7. Trim curb as required to clear actuator in the down position.
8. For typical lubricator mount assembly, see "Linear Actuators And Drives - 01" sheet.

CONTRACT CHANGE ORDER NO. _____
SHEET ____ OF ____

REQUESTS FOR INFORMATION NOT ADDRESSED IN THIS CCO REMAIN IN FORCE

ALL DIMENSIONS ARE IN MILLIMETERS UNLESS OTHERWISE SHOWN

R. Valizadeh/V. Toan/Y.L./W.L./F.C.
DESIGN OVERSIGHT
SIGN OFF DATE 01/06/12

MARK	DATE	DESCRIPTIONS	BY	CH'D	CCO#
0	01/06/12	MISCELLANEOUS TRAVELER MODIFICATIONS	AS	JD	183S1

REVISIONS

	BY	CHECKED
DESIGN	A. Sanjines	J. Duxbury
DETAILS	A. Sanjines	J. Duxbury
QUANTITIES	A. Sanjines	J. Duxbury

PREPARED FOR THE STATE OF CALIFORNIA DEPARTMENT OF TRANSPORTATION

R. Manzanarez
PROJECT ENGINEER

BRIDGE NO. 34-0006L/R
KILOMETER POST 13.2/13.9

SAN FRANCISCO OAKLAND BAY BRIDGE
EAST SPAN SEISMIC SAFETY PROJECT
SELF-ANCHORED SUSPENSION BRIDGE
(SUPERSTRUCTURE & TOWER)

LINEAR ACTUATORS AND DRIVES-01A

Rev. Date: 5-18-98

ORIGINAL SCALE IN MILLIMETERS FOR REDUCED PLANS 0 10 20 30 40 50 60 70 80 90 100

CU 04
EA 0120F1

DISREGARD PRINTS BEARING EARLIER REVISION DATES 01/06/12

REVISION DATES (PRELIMINARY STAGE ONLY)

SHEET 719S1 OF

FILE => I:\bb\04-012001\sas\contract plans and cco\cco\cco#183s1\1-original 01-06-12\dgn\aktrv122a.dgn

100% PS&E

USERNAME => DWinrow DATE PLOTTED => 06 JAN 2012 TIME PLOTTED => 13:33:49