DIST.	COUNTY	ROUTE	KILOMETER POST TOTAL PROJECT	SHEET NO.	TOTAL SHEETS
04	SF	80	13.2/13.9	1066R2	1204

REGISTERED ENGINEER - CIVIL

12-6-04
PLANS APPROVAL DATE

REGISTERED PROFESSIONAL ENGINEER Tien Hung Ho No. C 43990 Exp. 06/03/13 CIVIL STATE OF CALIFORNIA

The State of California or its officers or agents shall not be responsible for the accuracy or completeness of electronic copies of this plan sheet.

T.Y. LIN / MOFFATT & NICHOL
825 BATTERY STREET
SAN FRANCISCO, CA 94111

Caltrans now has a web site! To get to the web site, go to: http://www.dot.ca.gov

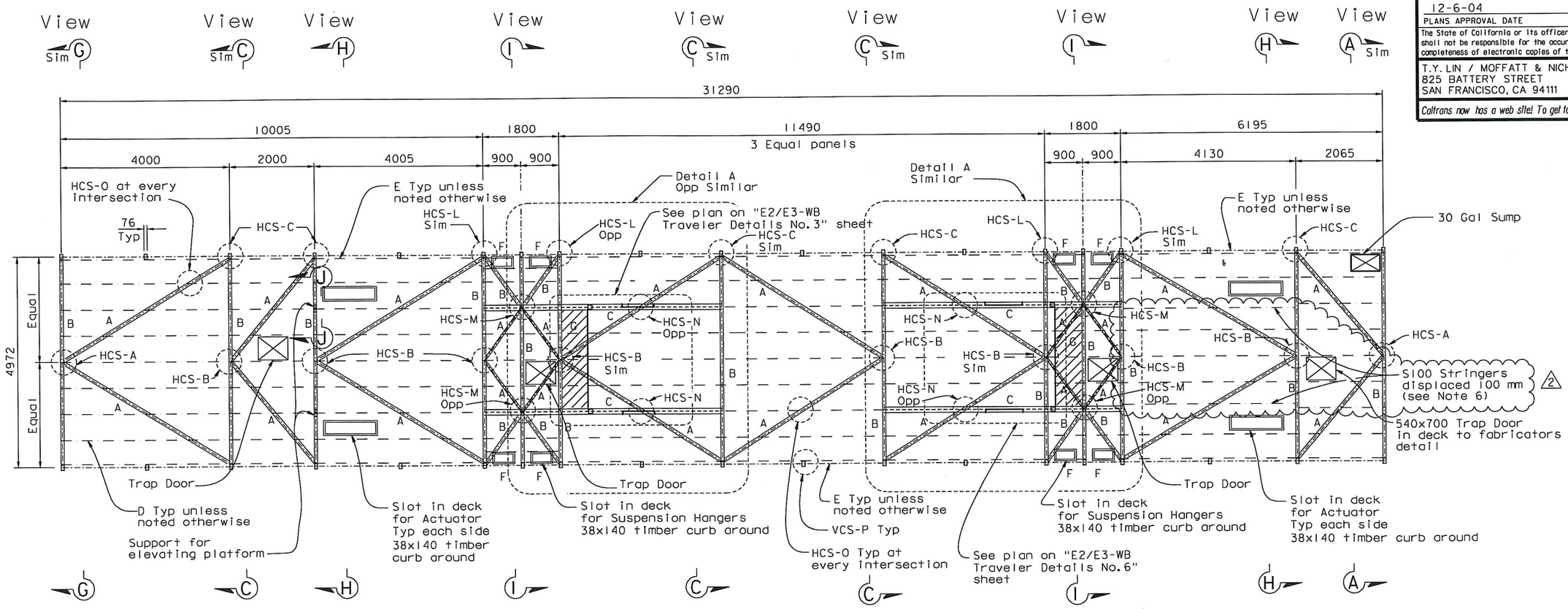

LEGEND:

A TS 102x51x4.8
B TS 102x76x4.8
C W 200x31
D S 100x11
E TS 102x51x4.8 + Plate
F TS 102x51x6.4 + Plate
G PL 6.4

30 Gal Sump location, for details see "Traveler Common Details No.8A" sheet.

PLAN OF PLATFORM AND HORIZONTAL CONNECTION IDENTIFICATION (PLAN AT DECK LEVEL)

1:50

NOTES:

1. For Horizontal Connection Standard (HCS-XX) see HCS group of "Traveler Connection Details" sheets.
2. For Views A to I see "Traveler Common Sections" sheets.
3. For Detail A see "E2/E3-EB Traveler Details No.3" sheet.
4. For Section J-J (support for elevating platform) see "E2/E3-EB Traveler Details No.8" sheet.
5. For VCS-P, see "Traveler Connection Details No.8" sheet.
6. For detail of displaced floor stringers, see "Linear Actuators and Drives-01A" sheet. (2)

100 % PS&E

E2/E3 WB TRAVELER TRUSS PLAN

CONTRACT CHANGE ORDER NO. 183S1
SHEET 4 OF 20

REQUESTS FOR INFORMATION NOT ADDRESSED IN THIS CCO REMAIN IN FORCE

ALL DIMENSIONS ARE IN MILLIMETERS UNLESS OTHERWISE SHOWN

R. Vallzadeh/V. Toan/Y.L./W.L./F.C.
DESIGN OVERSIGHT
SIGN OFF DATE 01/06/12

MARK	DATE	DESCRIPTIONS	BY	CH'D	CCO#
2	01/06/12	MISCELLANEOUS TRAVELER MODIFICATIONS	AB	TH	183S1
1	02/12/10	TRAVELER MODIFICATIONS	JO	TH	24S1

REVISIONS

	BY	CHECKED
DESIGN	J. Otter	T. Ho
DETAILS	J. Otter	J. Leventini
QUANTITIES	J. Otter	J. Leventini

PREPARED FOR THE STATE OF CALIFORNIA DEPARTMENT OF TRANSPORTATION

R. Manzanarez
PROJECT ENGINEER

BRIDGE NO. 34-0006L/R
KILOMETER POST 13.2/13.9

SAN FRANCISCO OAKLAND BAY BRIDGE
EAST SPAN SEISMIC SAFETY PROJECT
SELF-ANCHORED SUSPENSION BRIDGE
(SUPERSTRUCTURE & TOWER)

E2/E3-WB TRAVELER DETAILS NO. 1

Rev. Date: 5-18-98

ORIGINAL SCALE IN MILLIMETERS FOR REDUCED PLANS 0 10 20 30 40 50 60 70 80 90 100

CU 04
EA 0120F1

DISREGARD PRINTS BEARING EARLIER REVISION DATES 01/05/02 01/04/02 12/19/02

REVISION DATES (PRELIMINARY STAGE ONLY)

SHEET 649R2 OF

FILE => L:\BB\04-01200I\SAS\Contract Plans and CCO\CCO\CCO#183S1\1-Original 01-06-12\DGN\aktrv062.dgn

USERNAME => DWinrow DATE PLOTTED => 06 JAN 2012 TIME PLOTTED => 13:23:23

DIST.	COUNTY	ROUTE	KILOMETER POST TOTAL PROJECT	SHEET NO.	TOTAL SHEETS
04	SF	80	13.2/13.9	1083S2R1	1204

REGISTERED ENGINEER - CIVIL

09-23-11

PLANS APPROVAL DATE

REGISTERED PROFESSIONAL ENGINEER Tien Hung Ho No. C 43990 Exp. 06/30/13 CIVIL STATE OF CALIFORNIA

The State of California or its officers or agents shall not be responsible for the accuracy or completeness of electronic copies of this plan sheet.

T.Y. LIN / MOFFATT & NICHOL
825 BATTERY STREET
SAN FRANCISCO, CA 94111

Caltrans now has a web site! To get to the web site, go to: http://www.dot.ca.gov

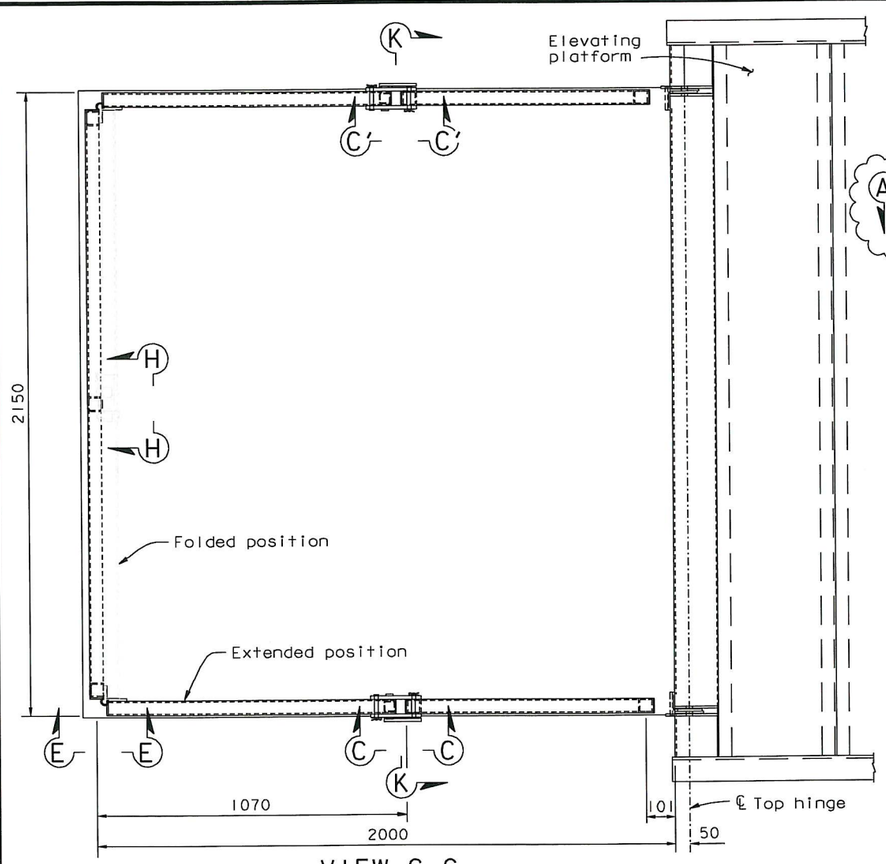

VIEW G-G
1:10

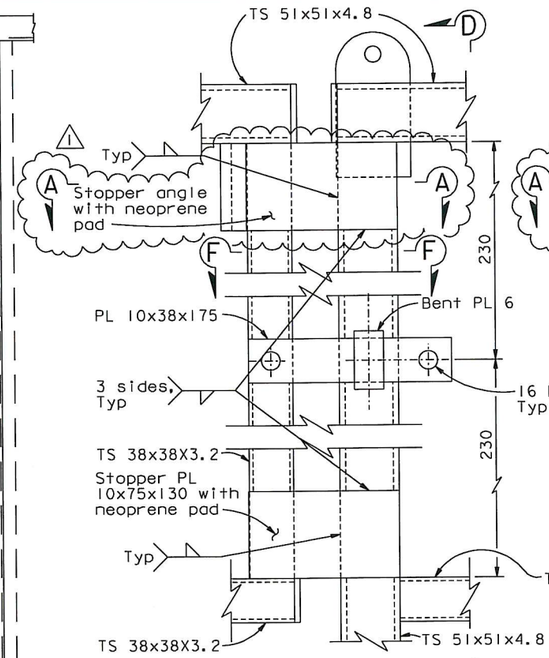

VIEW C-C
1:2.5

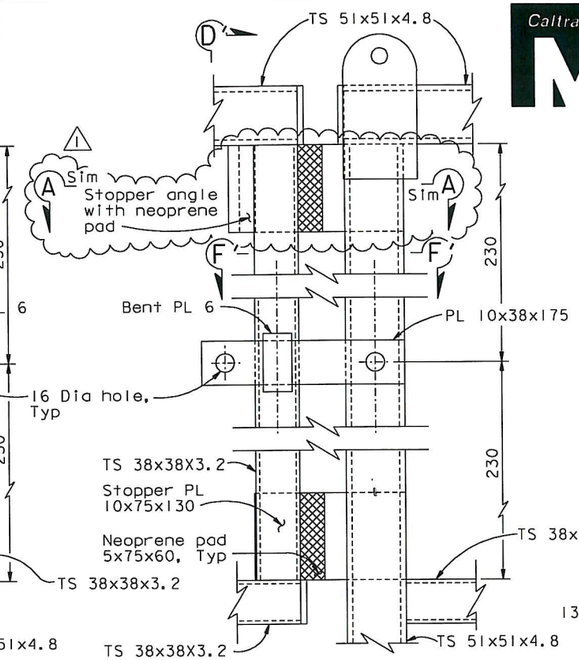

VIEW C'-C'
1:2.5

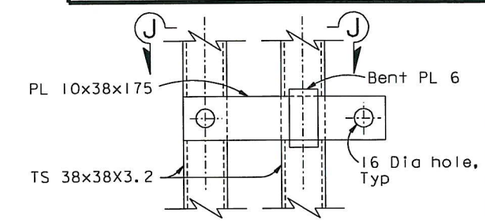

VIEW H-H
1:2.5

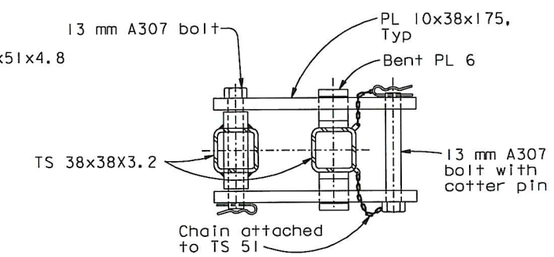

SECTION J-J
1:2.5

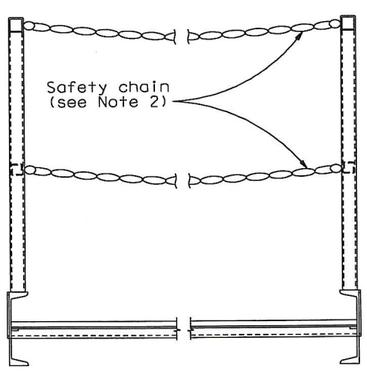

SECTION K-K
1:10

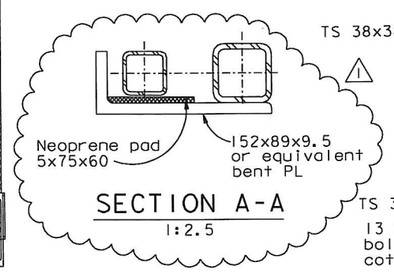

SECTION A-A
1:2.5

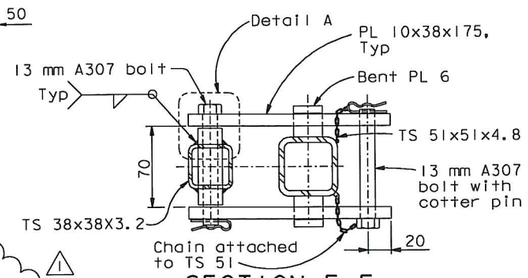

SECTION F-F
1:2.5

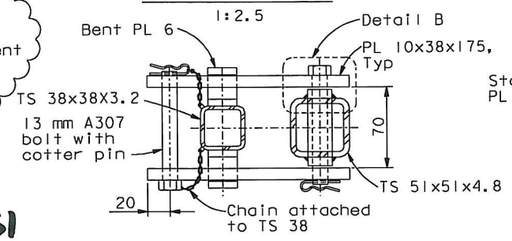

SECTION F'-F'
1:2.5

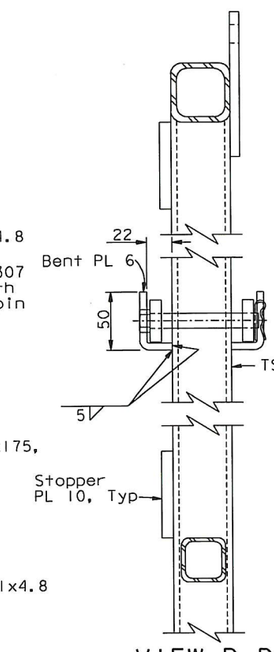

VIEW D-D
1:2.5

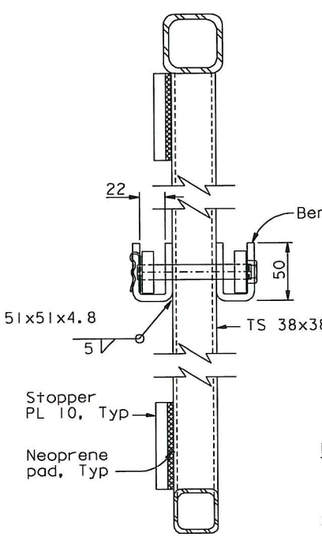

VIEW D'-D'
1:2.5

ALL DIMENSIONS ARE IN MILLIMETERS UNLESS OTHERWISE SHOWN

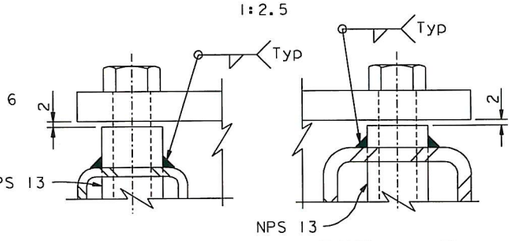

DETAIL A
1:1

DETAIL B
1:1

NOTES:

1. For View E-E, see "Traveler Common Details No. 1C" sheet.
2. Safety chain shall be galvanized chain with spring clip end fasteners. Chain and fasteners to be rated at 5 kN (1000 lb) breaking load.

CONTRACT CHANGE ORDER NO. 183S1
SHEET 5 OF 20

REQUESTS FOR INFORMATION NOT ADDRESSED IN THIS CCO REMAIN IN FORCE

MARK	DATE	DESCRIPTIONS	BY	CH'D	CCO#
1	01/06/12	MISCELLANEOUS TRAVELER MODIFICATONS	AB	TH	183S1
0	09/23/11	MISCELLANEOUS TRAVELER MODIFICATONS	TH	JD	183

REVISIONS

R. Valizadeh/V. Toan/Y.L./W.L./F.C.
DESIGN OVERSIGHT
Ryan Valizadeh / Vong Toan / Y. Liu
SIGN OFF DATE 01/06/12

DESIGN	BY T. Ho	CHECKED J. Duxbury	
DETAILS	BY A. Baumberger	CHECKED J. Duxbury	
QUANTITIES	BY A. Baumberger	CHECKED J. Duxbury	

PREPARED FOR THE STATE OF CALIFORNIA DEPARTMENT OF TRANSPORTATION

R. Manzanarez
PROJECT ENGINEER

BRIDGE NO. 34-0006L/R
KILOMETER POST 13.2/13.9

SAN FRANCISCO OAKLAND BAY BRIDGE
EAST SPAN SEISMIC SAFETY PROJECT
SELF-ANCHORED SUSPENSION BRIDGE
(SUPERSTRUCTURE & TOWER)

TRAVELER COMMON DETAILS NO. 1B

Rev. Date: 5-18-98

ORIGINAL SCALE IN MILLIMETERS FOR REDUCED PLANS 0 10 20 30 40 50 60 70 80 90 100

CU 04
EA 0120F1

DISREGARD PRINTS BEARING EARLIER REVISION DATES 09/23/11

REVISION DATES (PRELIMINARY STAGE ONLY)

SHEET 666S2R1 OF

FILE => I:\bb\04-012001\sas\contract plans and cco\cco\cco#183s1\1-original 01-06-12\dgn\aktrv080b.dgn

USERNAME => DWinrow DATE PLOTTED => 06 JAN 2012 TIME PLOTTED => 13:25:19

100 % PS&E

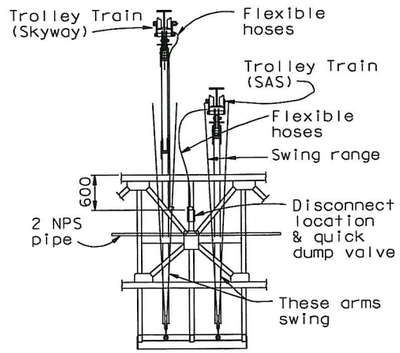

PIPING & DISCONNECT SCHEMATIC E2/E3 TRAVELERS

NTS

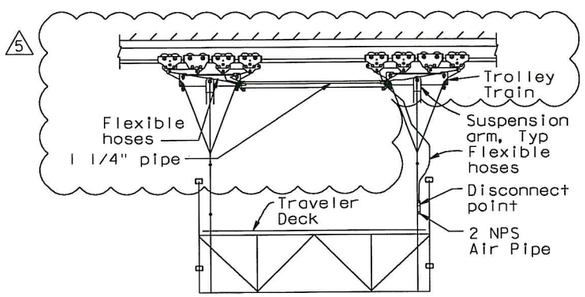

SKYWAY SUSPENSION

1:50

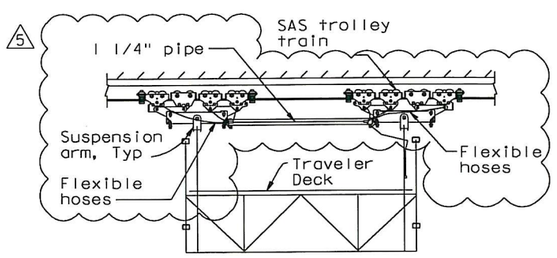

SAS SUSPENSION

1:50

PARTS FOR TROLLIES AND TROLLEY CONTROLS

Part/ No.	Description	Size	Quantity/ Traveler
1N	Throttle for North Trollies, Full flow. Deadman control. With built in emergency stop valve	1 1/4"	1
1S	Throttle for South Trollies, Full flow. Deadman control. With built in emergency stop valve	1 1/4"	1
2N	Pilot operated poppet valve for skew control on north motors	1 1/4"	1
2S	Pilot operated poppet valve for skew control on south motors	1 1/4"	1
3	Main System valve - pilot operated. Poppet Valve	1 1/2"	1
5 4A-4B	Quick Dump Valve for Valve 2N or 2S pilot system	1/4"	2
5	Pedal operated Main System Pilot Valve, deadman operation - To control Valve 3 (Note 20)	1/4"	2
5A	Trolley Air Lockout Valve (if elevating platforms are up)	1/4"	1
5 6A-6B	Double check valve - shuttle valve	3/8"	2
7A-7D	Pilot operated for operating valves 2N or 2S	1/4"	4
8	Pilot operated for applying brakes at extreme skew	3/8"	2
9	Bypass valve allowing brake release after brakes have been applied due to excess skew	3/8"	2
10	Quick Dump Valve for Brakes	1/2"	8-SAS 16-E2/E3 5
11	Quick Disconnect couplings. with closure caps. (Required on E2/E3 Travelers only) Note 2	1/2"	2: (4)
12	Quick Disconnect couplings. with closure caps. (Required on E2/E3 Travelers only) Note 2	1 1/4"	4: (8)
13	Exhaust Choke Valve for speed control	1/2"	12-SAS 24-E2/E3 5
14	Silencer 1/2" for motors, varies at other locations 5	1/2"	12-SAS 24-E2/E3 Qty shown for motors only
15	Whistle valve	3/8"	1
16	Whistle		1
17	Twiflex Caliper Brakes, Spring on, pressure off		16-SAS 32-E2/E3
18	Ingersoll Rand piston air motor trolley		12-SAS 24-E2/E3
19	Lubricator, Filter and Pressure Regulator	1 1/2"	1
20	Gage	50 mm	1
21	NOT USED		
22	Coupling	2"	
23	Full Port Ball Valve	2"	
24	Flexible Supply Hose - 12,000 long	2"	2
25	Coupling	2"	2
26	Motor shutdown over-ride valve	1/4"	2
27	3-Way Manual Diversion Ball Valve with Latch-Lock Lever and Nut to allow maintenance and repair of the Pneumatic System at the Trolley.	1 1/2"	1
5 28	3 Way, 2 Position Spring return NC Pilot operated valve	1/4"	2
29	Shuttle Valve: Will be actuated by either L1 or L4 as necessary.	1/4"	1
5 29A	Shuttle Valve: Will be actuated by either 1N or 1S as necessary.	1/4"	2
30	Inline Lubricator: 1. Use one for each port of each Trolley Motor. 2. Plumb as close to Motor as Possible.	3/4"	24-SAS 48-E2/E3
30-A	Air Manifold: 2 X 1 1/4" NPS inlets 3 X 3/4" NPS outlets	1 1/4"	8-SAS 16-E2/E3
L1-L4	Skew Control Limit Valve	1/4"	4

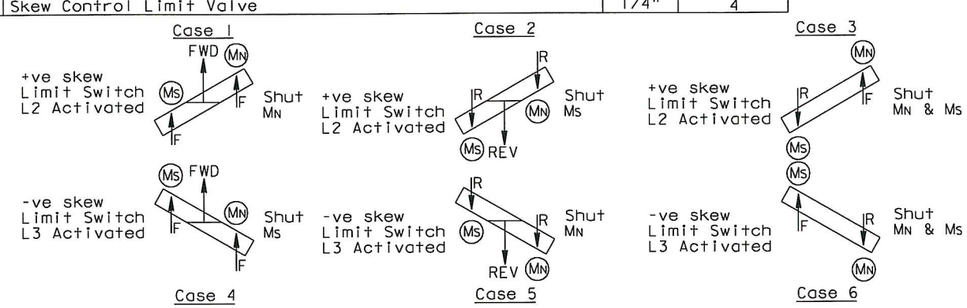

SKEW ORIENTATION DIAGRAM

FUNCTION DESCRIPTION:

1. Pneumatic system operation for skew correction per skew orientation matrix & diagram. Limit switches L2 and L3 shutdown only the motor causing excessive skew at approx 50% of Max allowable skew. This function can be over-ridden when it is necessary to operate at a greater skew: (valves 26).
2. Limit switches L1 and L4 apply all brakes when the critical skew is reached. The brakes may be released on either the North or the South trolleys through a manual over-ride (9).

SKEW ORIENTATION MATRIX

CASE	MOTOR Ms	MOTOR MN	SKEW	L2	L3	SHUT
1	F	F	+ve	Act.	-	MN
2	R	R	+ve	Act.	-	MS
3	R	F	+ve	Act.	-	MN & M
4	F	F	-ve	-	Act.	MS
5	R	R	-ve	-	Act.	MN
6	F	R	-ve	-	Act.	MN & MS

5 LEGEND:

F - Travelling West

R - Travelling East

NOTES:

1. For general notes see "Traveler Air System-02" sheet.
2. Quantities are for the portion of the disconnects that remain with the traveler scaffold. Quantities for the detachable portions are shown in parenthesis.

5 REVISION 5 SUPERSEDES REVISION 4

REVISION 2 SUPERSEDES REVISION 1

CONTRACT CHANGE ORDER NO. 183S1

SHEET 6 OF 20

REGISTERED PROFESSIONAL ENGINEER R. Henriksen No. M 029816 Exp. 06/30/12 MECHANICAL STATE OF CALIFORNIA

FOR REVISIONS ONLY

REQUESTS FOR INFORMATION NOT ADDRESSED IN THIS CCO REMAIN IN FORCE

MARK	DATE	DESCRIPTIONS	BY	CH'D	CCO#
5	01/11/12	MISCELLANEOUS TRAVELER MODIFICATIONS	RH	AS	183S1
4	08/23/11	MISCELLANEOUS TRAVELER MODIFICATIONS	RH	AS	183
3	07/30/10	TRAVELER MODIFICATIONS	RH	NV	24S1
2	08/21/09	TRAVELER MODIFICATIONS	RH	NV	24S1
1	07/20/07	RAIL CHANGE & MISCELLANEOUS DETAILS	RD	NV	24

REVISIONS

R. Valizadeh/V. Toan/Y. L./W. L./F. C.
DESIGN OVERSIGHT
SIGN OFF DATE 01/11/12

Rev. Date: 5-18-98

	BY	CHECKED
DESIGN	J. Otter	R. Donikian
DETAILS	J. Otter	R. Donikian
QUANTITIES	J. Otter	M. Roberts

PREPARED FOR THE STATE OF CALIFORNIA DEPARTMENT OF TRANSPORTATION

R. Manzanarez
PROJECT ENGINEER

ALL DIMENSIONS ARE IN MILLIMETERS UNLESS OTHERWISE SHOWN

ORIGINAL SCALE IN MILLIMETERS FOR REDUCED PLANS 0 10 20 30 40 50 60 70 80 90 100

CU 04
EA 0120F1

BRIDGE NO. 34-0006L/R
KILOMETER POST 13.2/13.9

DISREGARD PRINTS BEARING EARLIER REVISION DATES 01/23/02 01/24/02 12/19/02

REVISION DATES (PRELIMINARY STAGE ONLY)

SHEET 7/17R5 OF

SAN FRANCISCO OAKLAND BAY BRIDGE
EAST SPAN SEISMIC SAFETY PROJECT
SELF-ANCHORED SUSPENSION BRIDGE
(SUPERSTRUCTURE & TOWER)

TRAVELER AIR SYSTEM-01A

FILE => L:\BB\04-01200I\SAS\Contract Plans and CCO\CCO\CCO#183S1\2-Update 01-11-12\DGN\aktrv120a.dgn

USERNAME => arivera DATE PLOTTED => 11 JAN 2012 TIME PLOTTED => 10:56:30

100 % PS&E

Caltrans Metric

DIST.	COUNTY	ROUTE	KILOMETER POST TOTAL PROJECT	SHEET NO.	TOTAL SHEETS
04	SF	80	13.2/13.9	1134R5	1204

REGISTERED ENGINEER - CIVIL

12-6-04
PLANS APPROVAL DATE

REGISTERED PROFESSIONAL ENGINEER Roupen Donikian No. M 20235 Exp. 09/30/06 MECHANICAL STATE OF CALIFORNIA

The State of California or its officers or agents shall not be responsible for the accuracy or completeness of electronic copies of this plan sheet.

T.Y. LIN / MOFFATT & NICHOL
825 BATTERY STREET
SAN FRANCISCO, CA 94111

Caltrans now has a web site! To get to the web site, go to: http://www.dot.ca.gov

DIST.	COUNTY	ROUTE	KILOMETER POST TOTAL PROJECT	SHEET NO.	TOTAL SHEETS
04	SF	80	13.2/13.9	1134S1R4	1204

Caltrans Metric

REGISTERED ENGINEER - CIVIL

06-19-09

PLANS APPROVAL DATE

REGISTERED PROFESSIONAL ENGINEER R. Henriksen No. M 029816 Exp. 06/30/12 MECHANICAL STATE OF CALIFORNIA

The State of California or its officers or agents shall not be responsible for the accuracy or completeness of electronic copies of this plan sheet.

T.Y. LIN / MOFFATT & NICHOL
825 BATTERY STREET
SAN FRANCISCO, CA 94111

Caltrans now has a web site! To get to the web site, go to: http://www.dot.ca.gov

NOTES:

1. For parts list, see "Traveler Air System - 01A" sheet.
2. For notes regarding air system, see "Traveler Air System - 02A" sheet.
3. For control panel details, see "Traveler Control Panel Layout" sheet.

LIMIT SWITCH FUNCTIONS:

L1 & L4 - all brakes on

L2 & L3 - shut down the motor causing excessive skew

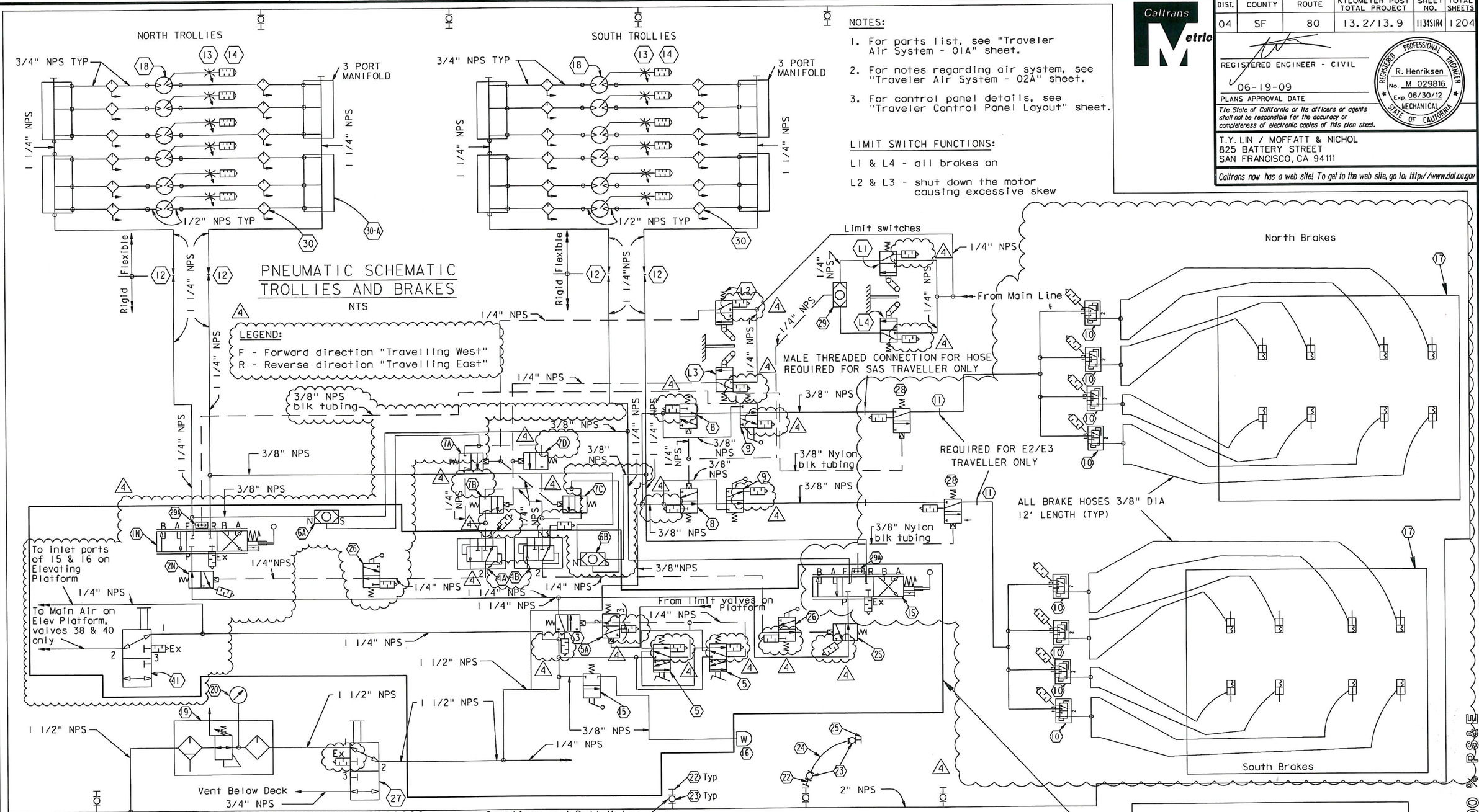

All Items Contained within Boundary Line are Located in the Control Panel

100 % PS&E

4 REVISION 4 SUPERSEDES REVISION 3

CONTRACT CHANGE ORDER NO. 183S1
SHEET 7 OF 20

REQUESTS FOR INFORMATION NOT ADDRESSED IN THIS CCO REMAIN IN FORCE

MARK	DATE	DESCRIPTIONS	BY	CH'D	CCO#
4	01/06/12	MISCELLANEOUS TRAVELER MODIFICATIONS	RH	AS	183S1
3	08/23/11	MISCELLANEOUS TRAVELER MODIFICATIONS	RH	AS	183
2	07/30/10	TRAVELER MODIFICATIONS	RH	TH	24S1
1	02/12/10	TRAVELER MODIFICATIONS	RH	TH	24S1
0	06/19/09	TRAVELER MODIFICATIONS	RH	TH	24S1

REVISIONS

R. Valizadeh/V. Toan/Y.L./W.L./F.C.
DESIGN OVERSIGHT
Roger Valizadeh / Vong Toan / Y. Liu
SIGN OFF DATE 01/06/12

Rev. Date: 5-18-98

DESIGN	BY R. Scott	CHECKED R. Henriksen	
DETAILS	BY Z. Istre	CHECKED J. Otter	
QUANTITIES	BY R. Scott	CHECKED T. Ho	

ORIGINAL SCALE IN MILLIMETERS FOR REDUCED PLANS 0 10 20 30 40 50 60 70 80 90 100

PREPARED FOR THE STATE OF CALIFORNIA DEPARTMENT OF TRANSPORTATION

ALL DIMENSIONS ARE IN MILLIMETERS UNLESS OTHERWISE SHOWN

R. Manzanarez
PROJECT ENGINEER

BRIDGE NO. 34-0006L/R
KILOMETER POST 13.2/13.9

CU 04
EA 0120F1

DISREGARD PRINTS BEARING EARLIER REVISION DATES 06/19/09

REVISION DATES (PRELIMINARY STAGE ONLY)

SHEET 717S1R4 OF

SAN FRANCISCO OAKLAND BAY BRIDGE
EAST SPAN SEISMIC SAFETY PROJECT
SELF-ANCHORED SUSPENSION BRIDGE
(SUPERSTRUCTURE & TOWER)

TRAVELER AIR SYSTEM-01B

FILE => I:\bb\04-012001\sas\contract plans and cco\cco\cco#183s1\1-original 01-06-12\dgn\aktrv120b.dgn

USERNAME => DWinrow DATE PLOTTED =>

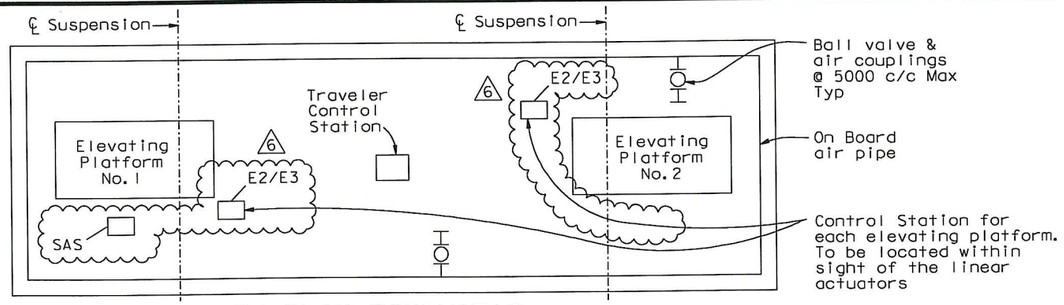

KEY PLAN SCHEMATIC

△6 (EAST BOUND SHOWN, WEST BOUND SIMILAR)

NOTES:

For location of Traveler Control Stations see Assembly sheets for each traveler

PARTS FOR ELEVATING PLATFORM CONTROL

Part	Description	Size	Quantity/Traveler
△6 L5-L6	Elevator Platform control Limit Valve	1/4"	1 or 2
6C	Shuttle Valve: Will be actuated by either L5 or L6 as necessary.	1/4"	0 or 1
31	Pressure Regulator set to limit pressure to 689 kPag (100 psig)	1 1/4"	1 or 2
△6 31A	Pressure Regulator set to limit pressure to 485 kPag (70 psig)	3/4"	1 or 2
32	Full flow throttle and reverse valve for the linear actuator air motors with built-in emergency stop button. Deadman operation. Use same valve type as is used for trolley throttles.	1 1/4"	1 or 2
33	Linear Actuator Air Motor. Max air consumption 183 scfm per motor		1 or 2
34	Exhaust Choke Throttling Valve	To suit motor port	1 or 2
35	Silencer	To suit motor port	1 or 2
36	Inline Lubricator: One Required at each air motor inlet.	3/4"	2 or 4
37	NOT USED		
38	Piloted Safety Valve to allow flow only when Pedal Valve 40 is actuated. - Poppet Valve	1 1/4"	1 or 2
39	NOT USED		
40	Pedal Control Valve, located at the Elevated Platform Control Station. Operation: 1. To lift Elevated Platform, Pedal must be held depressed while operating the Throttle Valve. (32)	1/4"	1 or 2
41	3-Way Manual Diversion Ball Valve with Latch-Lock Lever and Nut to allow isolation of Elevating Platforms for maintenance or repair without having to shut down the other air systems on the Traveler	1 1/4"	1
△6 42	3-Way Normally Open Palm Button Valve	1/4"	1 OR 0

CONTRACT CHANGE ORDER NO. 183S1
SHEET 8 OF 20

REQUESTS FOR INFORMATION NOT ADDRESSED IN THIS CCO REMAIN IN FORCE

MARK	DATE	DESCRIPTIONS	BY	CH'D	CCO#
△6	01/06/12	MISCELLANEOUS TRAVELER MODIFICATIONS	RH	AS	183S1
△5	08/23/11	MISCELLANEOUS TRAVELER MODIFICATIONS	RH	AS	183
△4	02/25/11	TRAVELER MODIFICATIONS	RH	AS	183
△3	02/12/10	TRAVELER MODIFICATIONS	RH	AS	24S1
△2	08/21/09	TRAVELER MODIFICATIONS	RH	AS	24S1
△1	07/20/07	RAIL CHANGE & MISCELLANEOUS DETAILS	RD	NV	24

REVISIONS

△6 REVISION △6 SUPERSEDES REVISIONS △4 & △5

REGISTERED PROFESSIONAL ENGINEER R. Henriksen No. M 029816 Exp. 06/30/12 MECHANICAL STATE OF CALIFORNIA

FOR REVISIONS ONLY

R. Valizadeh/V. Toan/Y. L./W. L./F. C.
DESIGN OVERSIGHT
SIGN OFF DATE 01/06/12

Rev. Date: 5-18-98

	BY	CHECKED
DESIGN	R. Scott	R. Henriksen
DETAILS	Z. Istre	J. Otter
QUANTITIES	R. Scott	T. Ho

PREPARED FOR THE STATE OF CALIFORNIA DEPARTMENT OF TRANSPORTATION

ORIGINAL SCALE IN MILLIMETERS FOR REDUCED PLANS 0 10 20 30 40 50 60 70 80 90 100

ALL DIMENSIONS ARE IN MILLIMETERS UNLESS OTHERWISE SHOWN

R. Manzanarez
PROJECT ENGINEER

BRIDGE NO. 34-0006L/R
KILOMETER POST 13.2/13.9

CU 04
EA 0120F1

DISREGARD PRINTS BEARING EARLIER REVISION DATES 12/19/08

FILE => I:\bb\04-01200I\sas\contract plans and cco\cco\cco#183s1\1-original 01-06-12\dgn\aktrv121a.dgn

Caltrans Metric

DIST.	COUNTY	ROUTE	KILOMETER POST TOTAL PROJECT	SHEET NO.	TOTAL SHEETS
04	SF	80	13.2/13.9	1135R6	1204

REGISTERED ENGINEER - CIVIL
12-19-08
PLANS APPROVAL DATE

REGISTERED PROFESSIONAL ENGINEER Roupen Donikian No. C 56519 Exp. 06/30/09 STATE OF CALIFORNIA

The State of California or its officers or agents shall not be responsible for the accuracy or completeness of electronic copies of this plan sheet.

T.Y. LIN / MOFFATT & NICHOL
825 BATTERY STREET
SAN FRANCISCO, CA 94111

Caltrans now has a web site! To get to the web site, go to: http://www.dot.ca.gov

TRAVELER AIR SYSTEM NOTES:

1. All double check valves shall be installed horizontally.
2. All vents without silencers unless noted otherwise shall have a minimum of 300 mm of pipe and terminate with a screened downturned elbow.
3. Flexible hose (not to exceed 750 mm in length unless otherwise noted or shown) may be used for final connections to equipment.
4. All pipe sizes are typical for similar locations.
5. On board rigid pipe to be SCHED 40.
6. Provide support to 2" pipe within 150 mm of each pipe hose connection and at 1800 intervals maximum.
7. Provide downturned elbow and reducer as required at each equipment connection.
8. Provide sufficient flexible connection hose to accommodate traveler movement (12,000 mm length).
9. Mount throttle and whistle valves so as to be accessible by hand.
10. Mount main system pilot valves (Dead Man Switch) so as to be operated by foot.
11. Fabricator to design and provide a steel framed, plywood sheathed control console. Provide weather cover for all controls.
12. Traveler operating speed 6.1 m/min (20 fpm) fully loaded going up grade.
13. Anticipated trolley air consumption at full speed is 33 scfm per motorized trolley.
14. Pneumatic schematics illustrate the principles of the pneumatic systems. System manufacturer is to review pneumatic schematics; carry out detailed layout of the system; make any detailed modifications necessary to ensure the proper operation of the systems.
15. For functional description of components and other requirements, see specification.
16. Elevating platform drives and actuators are designed to operate with air pressure in the range from 490 to 690 kPa (70 to 100 psig). Provide pressure relief valves to avoid supply of excessive pressure to the drive motor so as to avoid excessive motor stall-out torque.
17. SAS EB & WB Travelers have 4 suspension systems (12 motors) and one elevating platform each.
18. E2/E3 EB & WB Travelers have 8 suspension systems (24 motors) & two elevating platforms each. These travelers change suspension systems when Hinge A is crossed.
19. Quick disconnects items 11 & 12 are only on the E2/E3 Travelers. SAS Travelers are to be piped with fixed connections.
20. Main system pilot valves (item (5)) - 1 required for operator facing east and 1 required for operator facing west.

SAN FRANCISCO OAKLAND BAY BRIDGE
EAST SPAN SEISMIC SAFETY PROJECT
SELF-ANCHORED SUSPENSION BRIDGE
(SUPERSTRUCTURE & TOWER)

TRAVELER AIR SYSTEM-02A

REVISION DATES (PRELIMINARY STAGE ONLY) 12/19/08

SHEET 718R6 OF

USERNAME => DWinrow DATE PLOTTED => 06 JAN 2012 TIME PLOTTED => 13:29:08

100% PS&E

DIST.	COUNTY	ROUTE	KILOMETER POST TOTAL PROJECT	SHEET NO.	TOTAL SHEETS
04	SF	80	13.2/13.9	1135SIR4	1204

REGISTERED ENGINEER - CIVIL

06-19-09

PLANS APPROVAL DATE

REGISTERED PROFESSIONAL ENGINEER R. Henriksen No. M 029816 Exp. 06/30/12 MECHANICAL STATE OF CALIFORNIA

The State of California or its officers or agents shall not be responsible for the accuracy or completeness of electronic copies of this plan sheet.

T.Y. LIN / MOFFATT & NICHOL
825 BATTERY STREET
SAN FRANCISCO, CA 94111

Caltrans now has a web site! To get to the web site, go to: http://www.dot.ca.gov

Safety Note - Platform Limit Switches

This circuit prevents movement of the traveler at any time except when the elevating platforms are fully down. In order to pass the pier with the SAS travelers (when elevating platform must be partially raised), personnel on the traveler platfrom must temporarily over-ride the elevating platform limit switch.

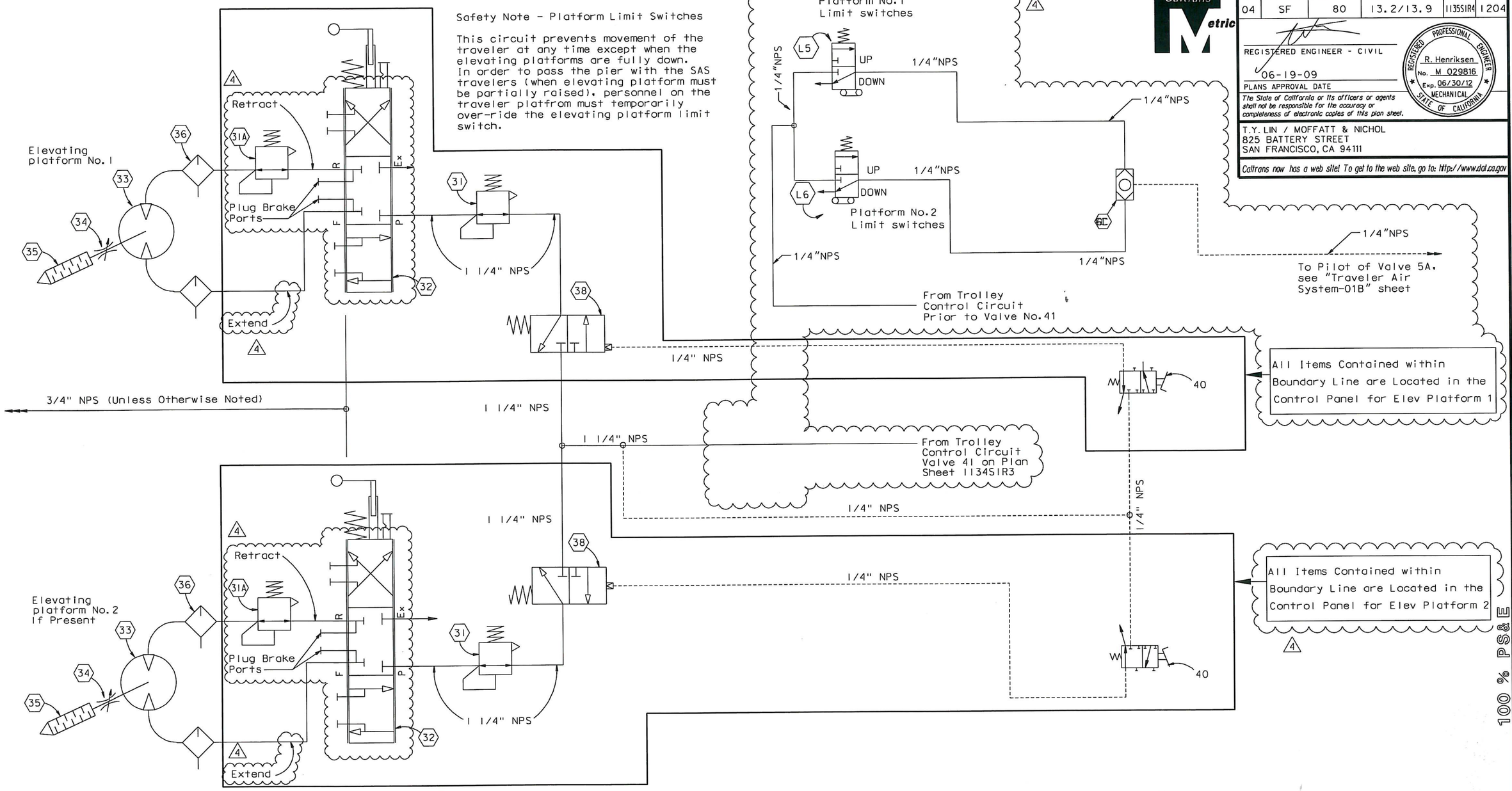

CONTRACT CHANGE ORDER NO. 183SI
SHEET 9 OF 20

REQUESTS FOR INFORMATION NOT ADDRESSED IN THIS CCO REMAIN IN FORCE

MARK	DATE	DESCRIPTIONS	BY	CH'D	CCO#
4	12/16/11	MISCELLANEOUS TRAVELER MODIFICATIONS	RH	AS	183SI
3	08/23/11	MISCELLANEOUS TRAVELER MODIFICATIONS	RH	AS	183
2	02/25/11	TRAVELER MODIFICATIONS	RH	TH	183
1	02/12/10	TRAVELER MODIFICATIONS	RH	TH	24SI
0	08/21/09	TRAVELER MODIFICATIONS	RH	TH	24SI

REVISIONS

ELEVATING PLATFORM PNEUMATIC SCHEMATIC - E2/E3

NTS

REVISION 4 SUPERSEDES REVISIONS 2 & 3

NOTES:

1. For parts list, see "Traveler Air System - 02A" sheet.

ALL DIMENSIONS ARE IN MILLIMETERS UNLESS OTHERWISE SHOWN

R. Vallizadeh/V. Toan/Y.L./W.L./F.C.
DESIGN OVERSIGHT
SIGN OFF DATE 12/16/11

Rev. Date: 5-18-98

	BY	CHECKED
DESIGN	R. Scott	R. Henriksen
DETAILS	Z. Istre	J. Otter
QUANTITIES	R. Scott	T. Ho

PREPARED FOR THE STATE OF CALIFORNIA DEPARTMENT OF TRANSPORTATION

R. Manzanarez
PROJECT ENGINEER

BRIDGE NO. 34-0006L/R
KILOMETER POST 13.2/13.9

SAN FRANCISCO OAKLAND BAY BRIDGE
EAST SPAN SEISMIC SAFETY PROJECT
SELF-ANCHORED SUSPENSION BRIDGE (SUPERSTRUCTURE & TOWER)

TRAVELER AIR SYSTEM-02B

ORIGINAL SCALE IN MILLIMETERS FOR REDUCED PLANS 0 10 20 30 40 50 60 70 80 90 100

CU 04
EA 0120F1

DISREGARD PRINTS BEARING EARLIER REVISION DATES 06/19/09

REVISION DATES (PRELIMINARY STAGE ONLY)

SHEET 718SIR4 OF

FILE => I:\bb\04-012001\sas\contract plans and cco\cco\cco#183si\1-original 01-06-12\dgn\aktrvl21b.dgn

100 % PS&E

USERNAME => DWinrow DATE PLOTTED => 06 JAN 2012 TIME PLOTTED => 13:30:09

DIST.	COUNTY	ROUTE	KILOMETER POST TOTAL PROJECT	SHEET NO.	TOTAL SHEETS
04	SF	80	13.2/13.9	1135S3	1204

REGISTERED ENGINEER - CIVIL

01-06-12

PLANS APPROVAL DATE

The State of California or its officers or agents shall not be responsible for the accuracy or completeness of electronic copies of this plan sheet.

REGISTERED PROFESSIONAL ENGINEER R. Henriksen No. M 029816 Exp. 06/30/12 MECHANICAL STATE OF CALIFORNIA

T.Y. LIN / MOFFATT & NICHOL
825 BATTERY STREET
SAN FRANCISCO, CA 94111

Caltrans now has a web site! To get to the web site, go to: http://www.dot.ca.gov

Safety Note - Platform Limit Switches

This circuit prevents movement of the traveler at any time except when the elevating platforms are fully down. In order to pass the pier with the SAS travelers (when elevating platform must be partially raised), personnel on the traveler platfrom must temporarily over-ride the elevating platform limit switch.

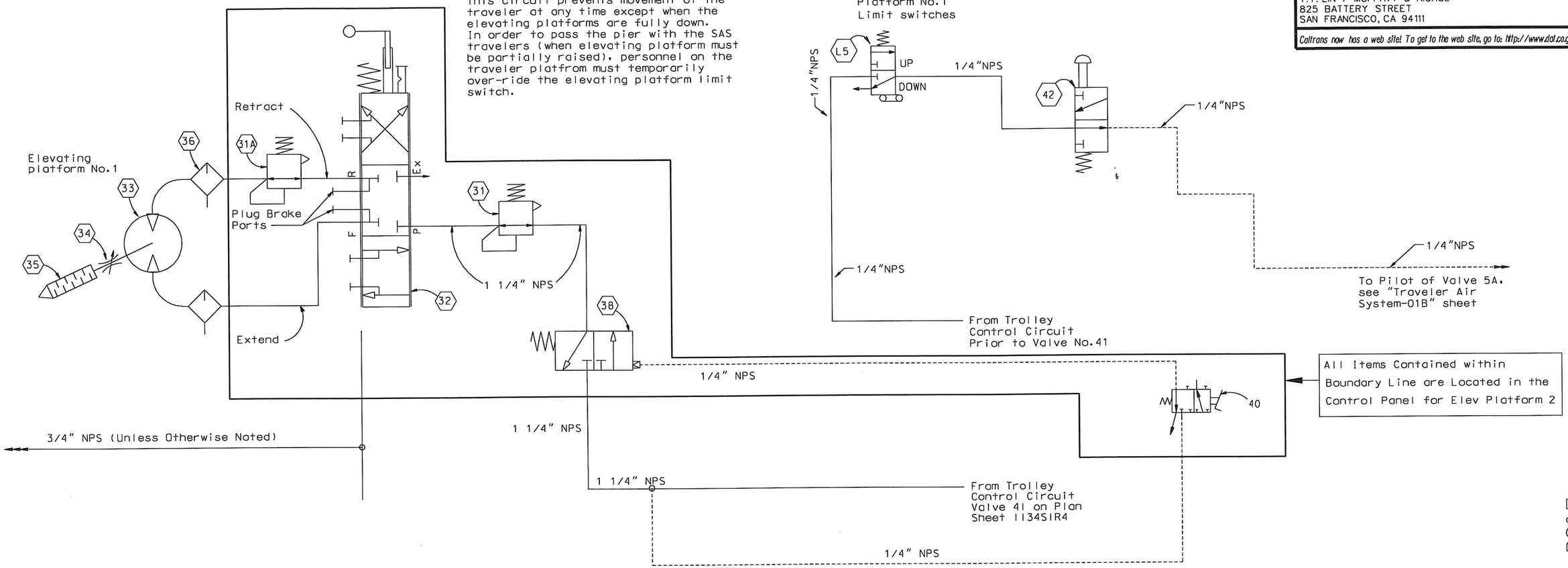

ELEVATING PLATFORM PNEUMATIC SCHEMATIC - SAS

NTS

NOTES:

1. For parts list, see "Traveler Air System - 02A" sheet.

CONTRACT CHANGE ORDER NO. 183S1
SHEET 10 OF 20

REQUESTS FOR INFORMATION NOT ADDRESSED IN THIS CCO REMAIN IN FORCE

ALL DIMENSIONS ARE IN MILLIMETERS UNLESS OTHERWISE SHOWN

MARK	DATE	DESCRIPTIONS	BY	CH'D	CCO#
0	01/06/12	MISCELLANEOUS TRAVELER MODIFICATIONS	RH	TH	183S1

REVISIONS

R. Valizadeh/V. Toan/Y.L./W.L./F.C.
DESIGN OVERSIGHT
Roya Valizadeh / Vong Toan / Y. Liu
SIGN OFF DATE 01/06/12

DESIGN	BY R. Scott	CHECKED R. Henriksen	
DETAILS	BY R. Scott	CHECKED A. Baumberger	
QUANTITIES	BY R. Scott	CHECKED A. Baumberger	

PREPARED FOR THE STATE OF CALIFORNIA DEPARTMENT OF TRANSPORTATION

R. Manzanarez
PROJECT ENGINEER

BRIDGE NO. 34-0006L/R
KILOMETER POST 13.2/13.9

SAN FRANCISCO OAKLAND BAY BRIDGE
EAST SPAN SEISMIC SAFETY PROJECT
SELF-ANCHORED SUSPENSION BRIDGE
(SUPERSTRUCTURE & TOWER)

TRAVELER AIR SYSTEM-02C

Rev. Date: 5-18-98

ORIGINAL SCALE IN MILLIMETERS FOR REDUCED PLANS 0 10 20 30 40 50 60 70 80 90 100

CU 04
EA 0120F1

DISREGARD PRINTS BEARING EARLIER REVISION DATES 01/06/12

REVISION DATES (PRELIMINARY STAGE ONLY)

SHEET 718S3 OF

FILE => I:\bb\04-0120F1\sas\contract plans and cco\cco\cco#183s1\1-original 01-06-12\dgn\aktrv121d.dgn

100 % PS&E

USERNAME => DWinrow DATE PLOTTED => 06 JAN 2012 TIME PLOTTED => 14:44:26

DIST.	COUNTY	ROUTE	KILOMETER POST TOTAL PROJECT	SHEET NO.	TOTAL SHEETS
04	SF	80	13.2/13.9	1136R2	1204

REGISTERED ENGINEER - MECHANICAL

12-6-04
PLANS APPROVAL DATE

REGISTERED PROFESSIONAL ENGINEER Roupen Donikian No. M 20235 Exp. 09/30/06 MECHANICAL STATE OF CALIFORNIA

The State of California or its officers or agents shall not be responsible for the accuracy or completeness of electronic copies of this plan sheet.

T.Y. LIN / MOFFATT & NICHOL
825 BATTERY STREET
SAN FRANCISCO, CA 94111

Caltrans now has a web site! To get to the web site, go to: http://www.dot.ca.gov

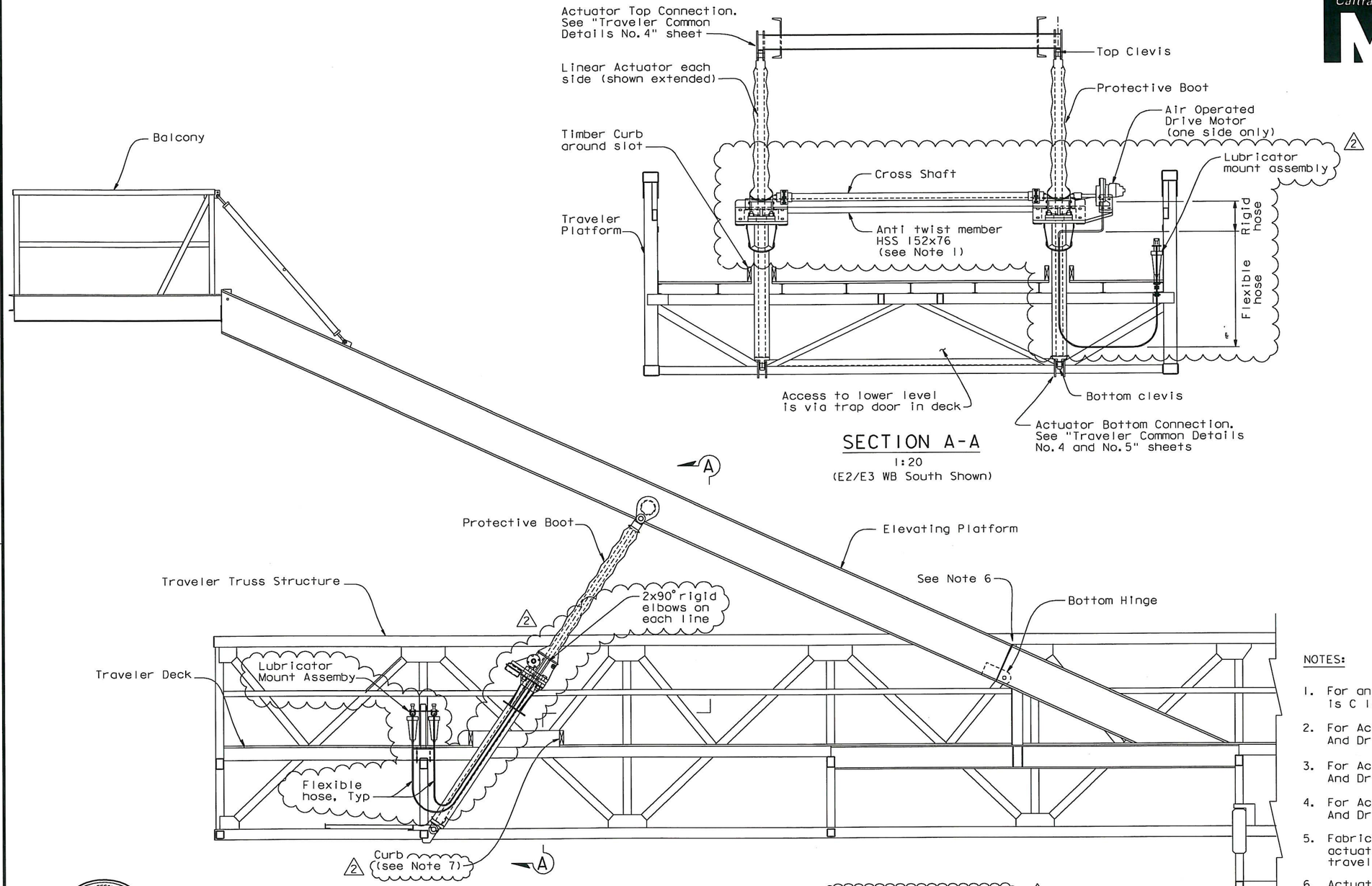

SECTION A-A
1:20
(E2/E3 WB South Shown)

LINEAR ACTUATOR ASSEMBLY - M30 ACTUATOR
(SHOWN ON THE SAS EB TRAVELER)
1:20

NOTES:

1. For anti-twist cross member with M30 Actuator, is C 150x16.
2. For Actuator notes, see "Linear Actuators And Drives - 02" sheet.
3. For Actuator details, see "Linear Actuators And Drives - 03" sheet.
4. For Actuator drives, see "Linear Actuators And Drives - 04" sheet.
5. Fabricator to verify all actuator lengths, actuator attachment positions, actuator travel requirements etc.
6. Actuator lengths & travels to be such that actuator reaches full extension & is arrested before the gap at the hinge closes tight.
7. Trim curb as required to clear actuator in the down position.

REGISTERED PROFESSIONAL ENGINEER James P. Duxbury No. C 64677 Exp. 06/30/13 CIVIL STATE OF CALIFORNIA

FOR REVISIONS ONLY

CONTRACT CHANGE ORDER NO. 183S1
SHEET 11 OF 20

REQUESTS FOR INFORMATION NOT ADDRESSED IN THIS CCO REMAIN IN FORCE

ALL DIMENSIONS ARE IN MILLIMETERS UNLESS OTHERWISE SHOWN

MARK	DATE	DESCRIPTIONS	BY	CH'D	CCO#
2	01/06/12	MISCELLANEOUS TRAVELER MODIFICATIONS	AS	JD	183S1
1	02/25/11	TRAVELER MODIFICATIONS	AS	JD	183

REVISIONS

R. Valizadeh/V. Toan/Y.L./W.L./F.C.
DESIGN OVERSIGHT
SIGN OFF DATE 01/06/12

Rev. Date: 5-18-98

	BY	CHECKED
DESIGN	J. Otter	R. Donikian
DETAILS	J. Otter	R. Donikian
QUANTITIES	J. Otter	M. Roberts

PREPARED FOR THE STATE OF CALIFORNIA DEPARTMENT OF TRANSPORTATION

R. Manzanarez
PROJECT ENGINEER

BRIDGE NO. 34-0006L/R
KILOMETER POST 13.2/13.9

CU 04
EA 0120F1

ORIGINAL SCALE IN MILLIMETERS FOR REDUCED PLANS 0 10 20 30 40 50 60 70 80 90 100

DISREGARD PRINTS BEARING EARLIER REVISION DATES → REVISION DATES (PRELIMINARY STAGE ONLY) 01/25/02 07/09/02 12/19/02

SAN FRANCISCO OAKLAND BAY BRIDGE
EAST SPAN SEISMIC SAFETY PROJECT
SELF-ANCHORED SUSPENSION BRIDGE
(SUPERSTRUCTURE & TOWER)

LINEAR ACTUATORS AND DRIVES-01

SHEET 719R2 OF

FILE => I:\bb\04-012001\sas\contract plans and cco\cco\cco#183s1\1-original 01-06-12\dgn\aktrv122.dgn

100 % PS&E

USERNAME => DWinrow DATE PLOTTED => 06 JAN 2012 TIME PLOTTED => 13:32:54

DIST.	COUNTY	ROUTE	KILOMETER POST TOTAL PROJECT	SHEET NO.	TOTAL SHEETS
04	SF	80	13.2/13.9	11365I	1204

REGISTERED ENGINEER - CIVIL

01-06-12

PLANS APPROVAL DATE

REGISTERED PROFESSIONAL ENGINEER James P. Duxbury No. C 64677 Exp. 06/30/13 CIVIL STATE OF CALIFORNIA

The State of California or its officers or agents shall not be responsible for the accuracy or completeness of electronic copies of this plan sheet.

T.Y. LIN / MOFFATT & NICHOL
825 BATTERY STREET
SAN FRANCISCO, CA 94111

Caltrans now has a web site! To get to the web site, go to: http://www.dot.ca.gov

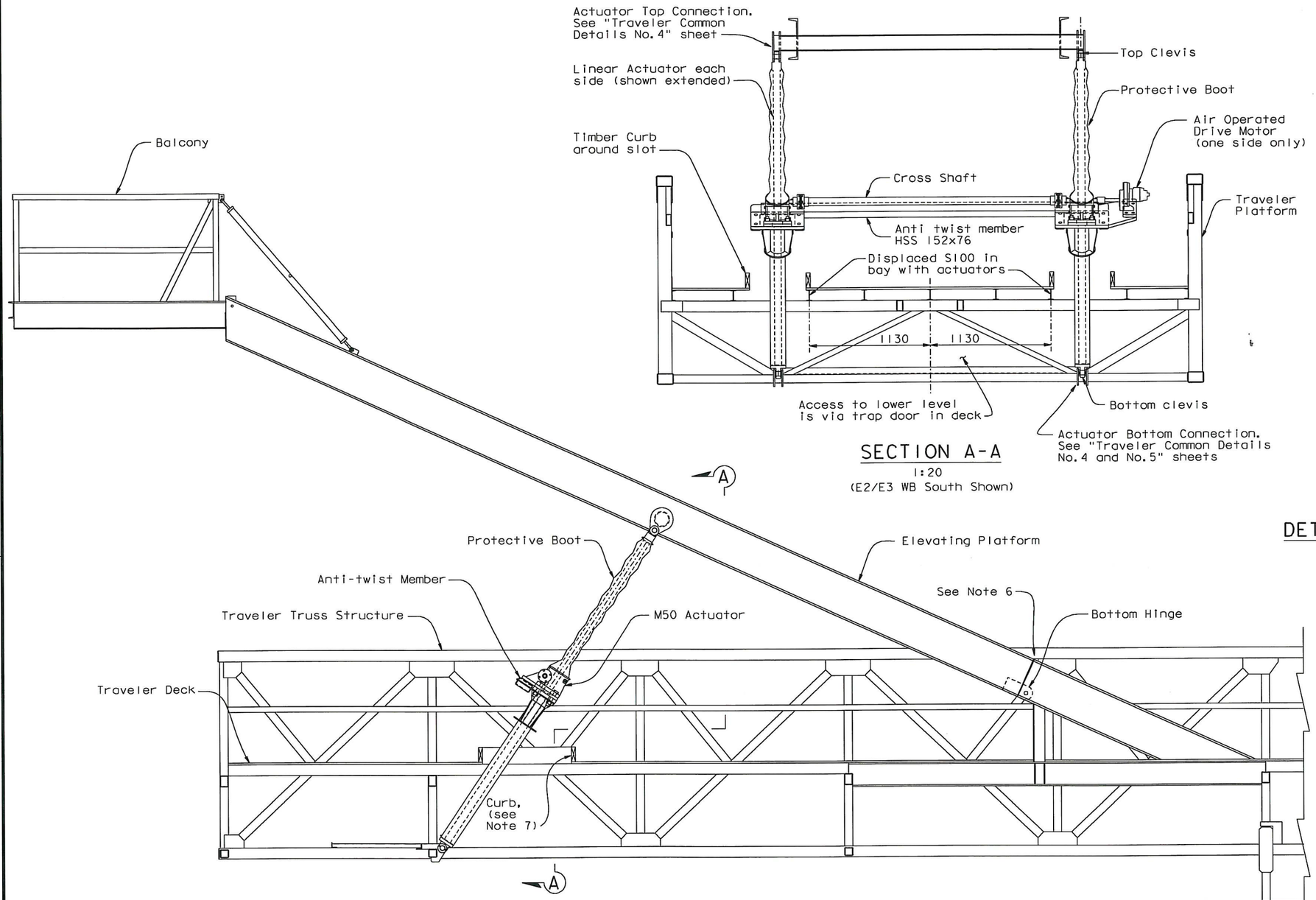

SECTION A-A
1:20
(E2/E3 WB South Shown)

LINEAR ACTUATOR ASSEMBLY - M50 ACTUATOR
(SHOWN ON THE E2/E3 WB TRAVELER)
1:20

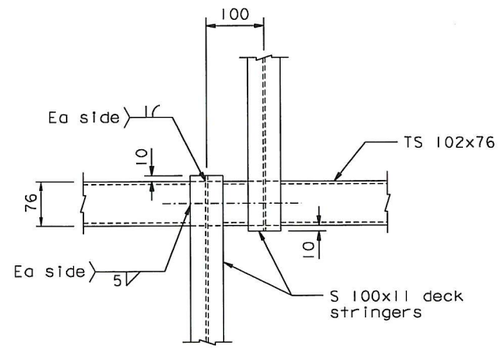

DETAIL OF DISPLACED FLOOR STRINGERS
1:5
(Applies Only at E2/E3 WB South)
(Shown at South end of bay, North end similar)

NOTES:

1. For anti-twist cross member with M50 Actuator, see "Linear Actuators And Drives - 06" sheet.
2. For Actuator notes, see "Linear Actuators And Drives - 02" sheet.
3. For Actuator details, see "Linear Actuators And Drives - 03" sheet.
4. For Actuator drives, see "Linear Actuators And Drives - 04" sheet.
5. Fabricator to verify all actuator lengths, actuator attachment positions, actuator travel requirements etc.
6. Actuator lengths & travels to be such that actuator reaches full extension & is arrested before the gap at the hinge closes tight.
7. Trim curb as required to clear actuator in the down position.
8. For typical lubricator mount assembly, see "Linear Actuators And Drives - 01" sheet.

CONTRACT CHANGE ORDER NO. 183S1
SHEET 12 OF 20

REQUESTS FOR INFORMATION NOT ADDRESSED IN THIS CCO REMAIN IN FORCE

ALL DIMENSIONS ARE IN MILLIMETERS UNLESS OTHERWISE SHOWN

R. Valizadeh/V. Toan/Y.L./W.L./F.C.
DESIGN OVERSIGHT
Roya Valizadeh / Vong Toan / Y. Liu
SIGN OFF DATE 01/06/12

MARK	DATE	DESCRIPTIONS	BY	CH'D	CCO#
0	01/06/12	MISCELLANEOUS TRAVELER MODIFICATIONS	AS	JD	183S1

REVISIONS

	BY	CHECKED
DESIGN	A. Sanjines	J. Duxbury
DETAILS	A. Sanjines	J. Duxbury
QUANTITIES	A. Sanjines	J. Duxbury

PREPARED FOR THE STATE OF CALIFORNIA DEPARTMENT OF TRANSPORTATION

R. Manzanarez
PROJECT ENGINEER

BRIDGE NO. 34-0006L/R
KILOMETER POST 13.2/13.9

SAN FRANCISCO OAKLAND BAY BRIDGE
EAST SPAN SEISMIC SAFETY PROJECT
SELF-ANCHORED SUSPENSION BRIDGE
(SUPERSTRUCTURE & TOWER)

LINEAR ACTUATORS AND DRIVES-01A

Rev. Date: 5-18-98

ORIGINAL SCALE IN MILLIMETERS FOR REDUCED PLANS 0 10 20 30 40 50 60 70 80 90 100

CU 04
EA 0120F1

DISREGARD PRINTS BEARING EARLIER REVISION DATES 01/06/12

REVISION DATES (PRELIMINARY STAGE ONLY)

SHEET 719S1 OF

FILE => I:\bb\04-01200I\sas\contract plans and cco\cco\cco#183s1\1-original 01-06-12\dgn\aktrv122a.dgn

100 % PS&E

USERNAME => DWinrow DATE PLOTTED => 06 JAN 2012 TIME PLOTTED => 13:33:49

DIST.	COUNTY	ROUTE	KILOMETER POST TOTAL PROJECT	SHEET NO.	TOTAL SHEETS
04	SF	80	13.2/13.9	1138R2	1204

REGISTERED ENGINEER - MECHANICAL

12-6-04
PLANS APPROVAL DATE

REGISTERED PROFESSIONAL ENGINEER Roupen Donikian No. M 20235 Exp. 09/30/06 MECHANICAL STATE OF CALIFORNIA

The State of California or its officers or agents shall not be responsible for the accuracy or completeness of electronic copies of this plan sheet.

T.Y. LIN / MOFFATT & NICHOL
825 BATTERY STREET
SAN FRANCISCO, CA 94111

Caltrans now has a web site! To get to the web site, go to: http://www.dot.ca.gov

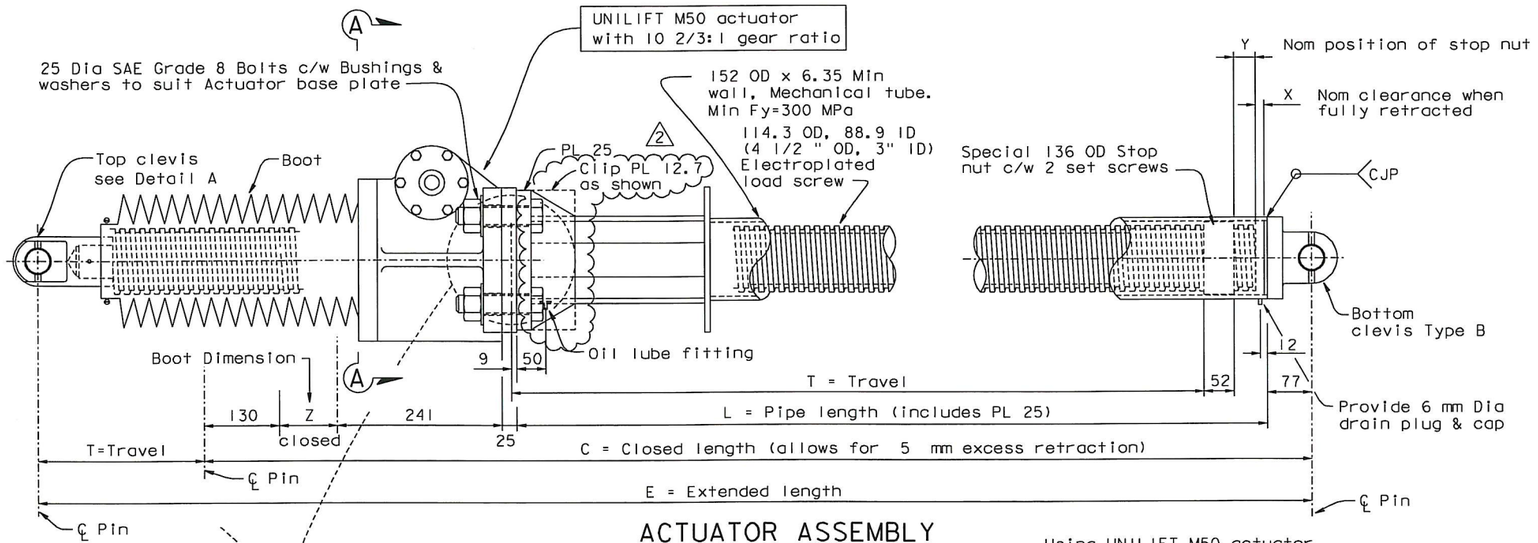

ACTUATOR ASSEMBLY
ACT - 03, - 04, - 05 & - 06

Using UNILIFT M50 actuator with 10 2/3:1 gear ratio

1:5

Location	Actuator Type	T	C	E	L	X	Y	Z	Lifted loads kN DL	Lifted loads kN LL	Nom lift speed mm/min
SAS-EB	ACT-01 (M30)	1397.5	2182	3579.5	1610	0	164.5	130	20	24	630
SAS-WB	ACT-02 (M30)	1323	2112	3435	1540	0	169	130	20	24	630
E2/E3-EB N	ACT-04 (M50)	1722	2563	4285	1935	0	165	155	25	30	400
E2/E3-EB S	ACT-05 (M50)	1642	2397	4039	1769	0	79	155	25	30	400
E2/E3-WB N	ACT-06 (M50)	1756	2826	4582	2198	0	394	155	25	30	400
E2/E3-WB S	ACT-03 (M50)	1471	2307	3778	1679	0	160	155	20	24	630

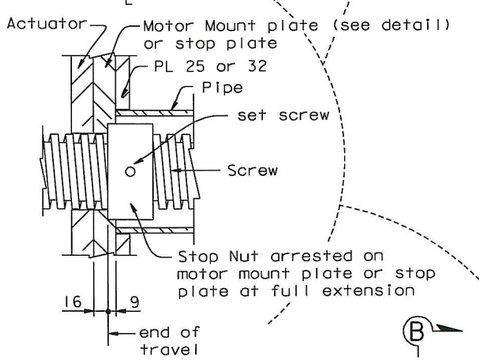

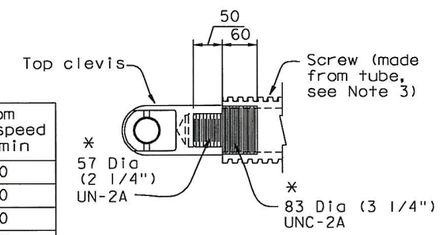

DETAIL A
1:5

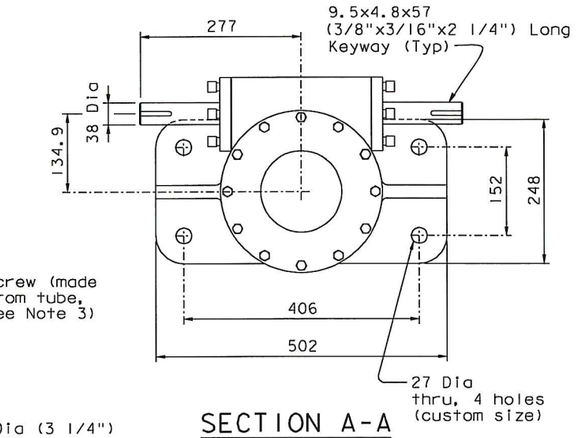

SECTION A-A
1:5

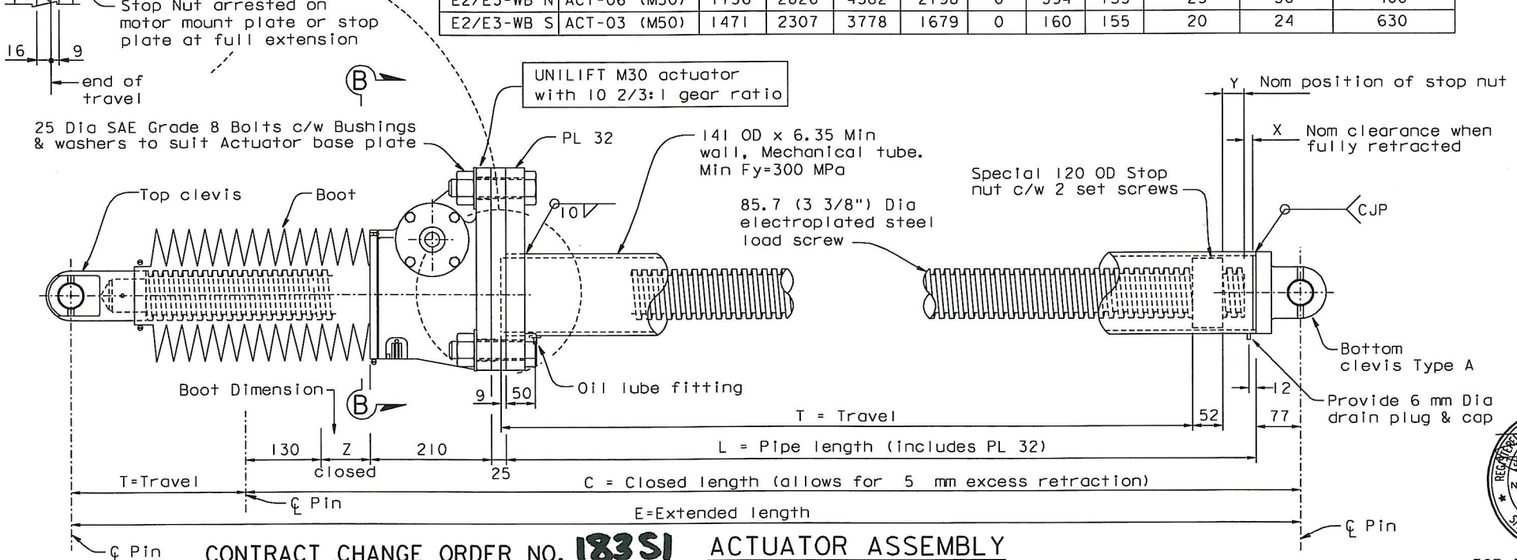

ACTUATOR ASSEMBLY
ACT - 01 & - 02

Using UNILIFT M30 actuator with 10 2/3:1 gear ratio

1:5

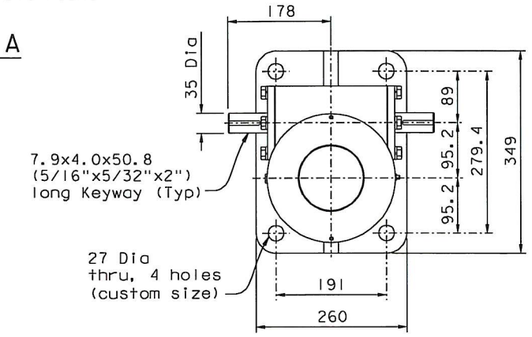

SECTION B-B
1:5

NOTES:

1. Manufacturer may supply sleeves & washer plates in lieu of custom hole sizes.
2. For details not shown, see "Linear Actuators And Drives -01, -02 & -04" sheets.
3. Manufacturer may supply solid screw in lieu of tube.

REGISTERED PROFESSIONAL ENGINEER James P. Duxbury No. C 64677 Exp. 06/30/13 CIVIL STATE OF CALIFORNIA

FOR REVISIONS ONLY

ALL DIMENSIONS ARE IN MILLIMETERS UNLESS OTHERWISE SHOWN

CONTRACT CHANGE ORDER NO. 183S1
SHEET 13 OF 20

REQUESTS FOR INFORMATION NOT ADDRESSED IN THIS CCO REMAIN IN FORCE

MARK	DATE	DESCRIPTIONS	BY	CH'D	CCO#
2	01/06/12	MISCELLANEOUS TRAVELER MODIFICATIONS	AS	JD	183S1
1	03/14/11	TRAVELER MODIFICATIONS	AS	JD	183

REVISIONS

R. Valizadeh/V. Toan/Y.L./W.L./F.C.
DESIGN OVERSIGHT
SIGN OFF DATE 01/06/12

Rev. Date: 5-18-98

	BY	CHECKED
DESIGN	J. Otter	R. Donikian
DETAILS	J. Otter	R. Donikian
QUANTITIES	J. Otter	M. Roberts

PREPARED FOR THE STATE OF CALIFORNIA DEPARTMENT OF TRANSPORTATION

R. Manzanarez
PROJECT ENGINEER

BRIDGE NO. 34-0006L/R
KILOMETER POST 13.2/13.9

SAN FRANCISCO OAKLAND BAY BRIDGE
EAST SPAN SEISMIC SAFETY PROJECT
SELF-ANCHORED SUSPENSION BRIDGE
(SUPERSTRUCTURE & TOWER)

LINEAR ACTUATORS AND DRIVES-03

ORIGINAL SCALE IN MILLIMETERS FOR REDUCED PLANS 0 10 20 30 40 50 60 70 80 90 100

CU 04
EA 0120F1

DISREGARD PRINTS BEARING EARLIER REVISION DATES 04/15/02 07/01/02 12/19/02

REVISION DATES (PRELIMINARY STAGE ONLY)

SHEET 721R2 OF

100 % PS&E

USERNAME => DWinrow DATE PLOTTED => 06 JAN 2012 TIME PLOTTED => 13:35:10

FILE => I:\bb\04-0120F1\sas\contract plans and cco\cco\cco#183s1\1-original 01-06-12\dgn\aktrv124.dgn

DIST.	COUNTY	ROUTE	KILOMETER POST TOTAL PROJECT	SHEET NO.	TOTAL SHEETS
04	SF	80	13.2/13.9	1139R2	1204

REGISTERED ENGINEER - MECHANICAL

12-6-04
PLANS APPROVAL DATE

REGISTERED PROFESSIONAL ENGINEER Roupen Donikian No. M 20235 Exp. 09/30/06 MECHANICAL STATE OF CALIFORNIA

The State of California or its officers or agents shall not be responsible for the accuracy or completeness of electronic copies of this plan sheet.

T.Y. LIN / MOFFATT & NICHOL
825 BATTERY STREET
SAN FRANCISCO, CA 94111

Caltrans now has a web site! To get to the web site, go to: http://www.dot.ca.gov

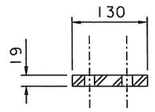

SECTION A-A

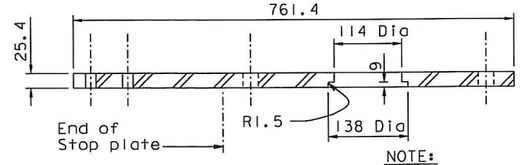

SECTION B-B

NOTE:
Adjust plate & bolt dimensions to suit actual Actuators & Drive motors chosen.

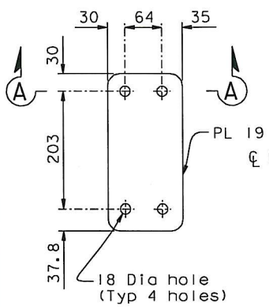

PLAN

SHIM PLATE

1:5

Flexible jaw coupling
Max angular offset - 1 degree
Max parallel offset - 0.4 mm
Torque rating 300 N-m
Lovejoy L150 or equivalent

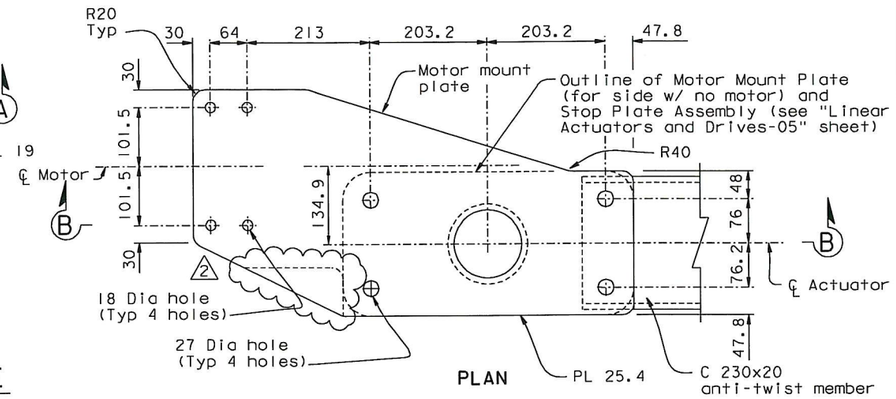

PLAN

MOTOR MOUNT & STOP PLATE

(See Note 1) 2

1:5

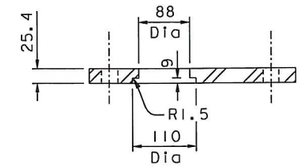

SECTION C-C

NOTE:
Adjust plate & bolt hole dimensions to suit actual Actuators & Drive Motors chosen.

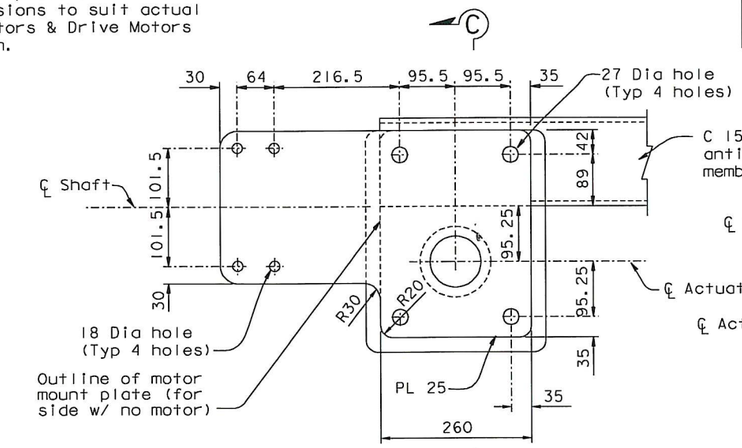

PLAN

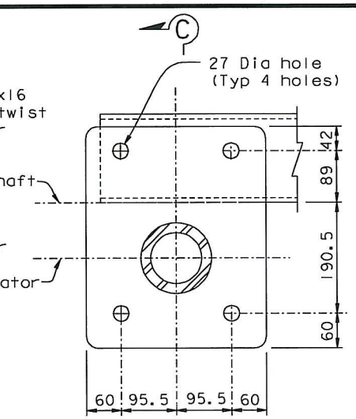

STOP PLATE

1:5

Flexible jaw coupling
Max angular offset - 1 degree
Max parallel offset - 0.4 mm
Torque rating 200 N-m
Lovejoy L110 or equivalent

MOTOR MOUNT PLATE

1:5

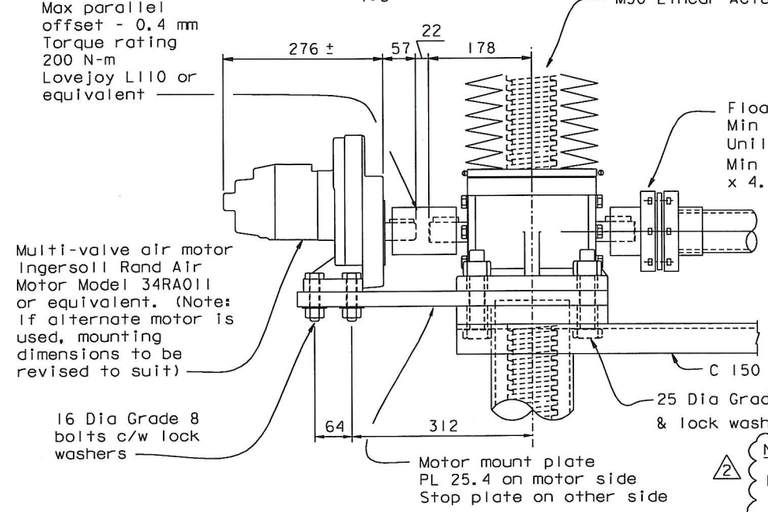

Motor Performance Characteristics
Starting torque - 133 N-m
Stall torque - 206 N-m Max
Speed @ Max power - 255 rpm
Air consumption @ Max power - 5.2 m3/Min

ACTUATOR DRIVE FOR M30 ACTUATOR

1:5

ALL DIMENSIONS ARE IN MILLIMETERS UNLESS OTHERWISE SHOWN

NOTES:
2 1. For modified anti-twist member and motor mount plate for M50 actuators, see "Linear Actuators and Drives-06" sheet.

Flexible jaw coupling
Max angular offset - 1 degree
Max parallel offset - 0.4 mm
Torque rating 300 N-m
Lovejoy L150 or equivalent

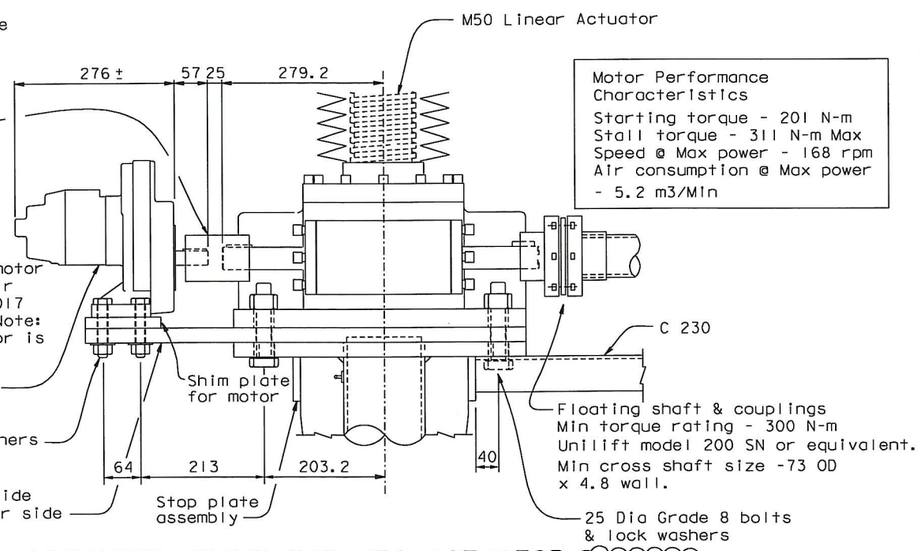

Motor Performance Characteristics
Starting torque - 201 N-m
Stall torque - 311 N-m Max
Speed @ Max power - 168 rpm
Air consumption @ Max power - 5.2 m3/Min

ACTUATOR DRIVE FOR M50 ACTUATOR

(See Note 1) 2

1:5

REGISTERED PROFESSIONAL ENGINEER James P. Duxbury No. C 64677 Exp. 06/30/13 CIVIL STATE OF CALIFORNIA

FOR REVISIONS ONLY

CONTRACT CHANGE ORDER NO. 183 S1
SHEET 14 OF 20

REQUESTS FOR INFORMATION NOT ADDRESSED IN THIS CCO REMAIN IN FORCE

MARK	DATE	DESCRIPTIONS	BY	CH'D	CCO#
2	01/06/12	MISCELLANEOUS TRAVELER MODIFICATIONS	AS	JD	183S1
1	02/25/11	TRAVELER MODIFICATIONS	AS	JD	183

REVISIONS

R. Valizadeh/V. Toan/Y.L./W.L./F.C.
DESIGN OVERSIGHT
SIGN OFF DATE 01/06/12

	BY	CHECKED
DESIGN	J. Otter	R. Donikian
DETAILS	J. Otter	R. Donikian
QUANTITIES	J. Otter	M. Roberts

PREPARED FOR THE STATE OF CALIFORNIA DEPARTMENT OF TRANSPORTATION

R. Manzanarez
PROJECT ENGINEER

BRIDGE NO. 34-0006L/R
KILOMETER POST 13.2/13.9

SAN FRANCISCO OAKLAND BAY BRIDGE
EAST SPAN SEISMIC SAFETY PROJECT
SELF-ANCHORED SUSPENSION BRIDGE
(SUPERSTRUCTURE & TOWER)

LINEAR ACTUATORS AND DRIVES-04

Rev. Date: 5-18-98

ORIGINAL SCALE IN MILLIMETERS FOR REDUCED PLANS 0 10 20 30 40 50 60 70 80 90 100

CU 04
EA 0120F1

DISREGARD PRINTS BEARING EARLIER REVISION DATES

REVISION DATES (PRELIMINARY STAGE ONLY) 01/07/02 01/01/02 12/19/02

SHEET 722R2 OF

FILE => I:\bb\04-0120F1\sas\contract plans and cco\cco\cco#183s1\1-original 01-06-12\dgn\aktrv125.dgn

100 % PS&E

USERNAME => DWinrow DATE PLOTTED => 06 JAN 2012 TIME PLOTTED => 13:38:01

DIST.	COUNTY	ROUTE	KILOMETER POST TOTAL PROJECT	SHEET NO.	TOTAL SHEETS
04	SF	80	13.2/13.9	1139S2	1204

REGISTERED ENGINEER - CIVIL

01-06-12

PLANS APPROVAL DATE

REGISTERED PROFESSIONAL ENGINEER James P. Duxbury No. C 64677 Exp. 06/30/13 CIVIL STATE OF CALIFORNIA

The State of California or its officers or agents shall not be responsible for the accuracy or completeness of electronic copies of this plan sheet.

T.Y. LIN / MOFFATT & NICHOL
825 BATTERY STREET
SAN FRANCISCO, CA 94111

Caltrans now has a web site! To get to the web site, go to: http://www.dot.ca.gov

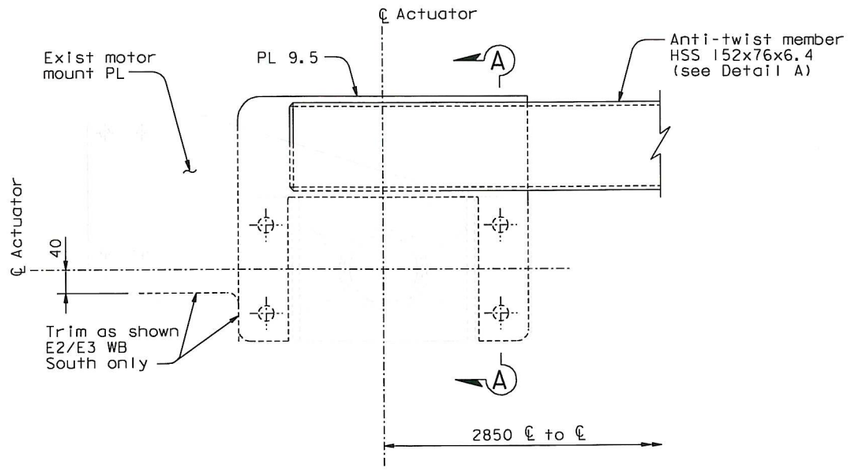

PLAN OF ASSEMBLY
1:5

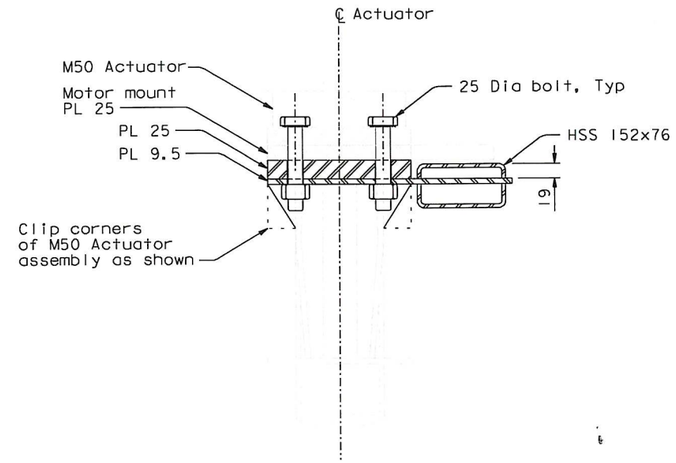

SECTION A-A
1:5

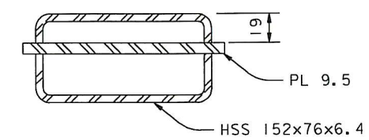

SECTION B-B
1:2.5

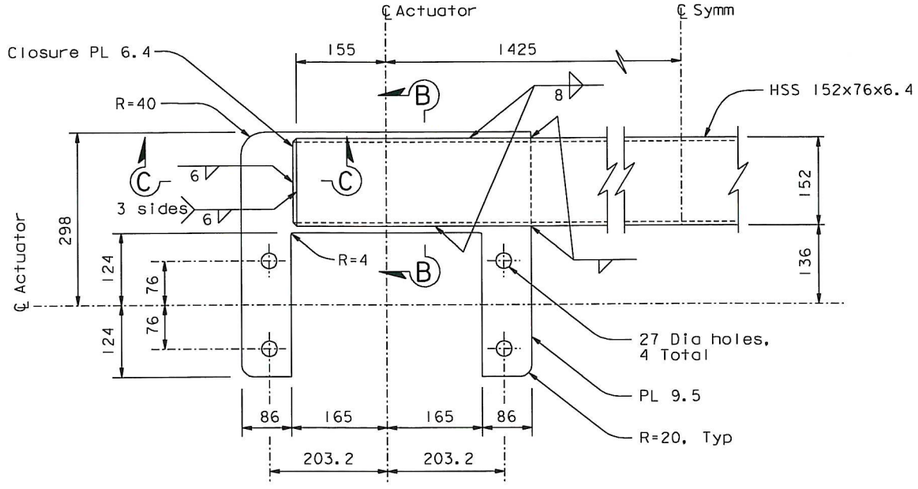

DETAIL A
1:5

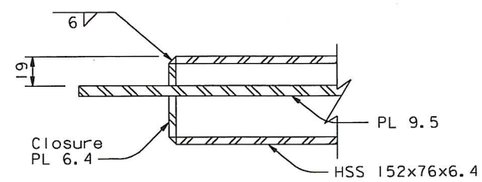

SECTION C-C
1:2.5

NOTES:

1. Contractor to confirm all dimensions and clearances.

MODIFIED ANTI-TWIST MEMBER FOR M50 ACTUATORS

Required at all Actuators on E2/E3 Travelers
(Not required for SAS Travelers)

CONTRACT CHANGE ORDER NO. 183S1
SHEET 15 OF 20

REQUESTS FOR INFORMATION NOT ADDRESSED IN THIS CCO REMAIN IN FORCE

ALL DIMENSIONS ARE IN MILLIMETERS UNLESS OTHERWISE SHOWN

MARK	DATE	DESCRIPTIONS	BY	CH'D	CCO#
0	01/06/12	MISCELLANEOUS TRAVELER MODIFICATIONS	AS	JD	183S1

REVISIONS

R. Valizadeh/V. Toan/Y.L./W.L./F.C.
DESIGN OVERSIGHT
SIGN OFF DATE 01/06/12

	BY	CHECKED
DESIGN	A. Sanjines	J. Duxbury
DETAILS	A. Sanjines	J. Duxbury
QUANTITIES	A. Sanjines	J. Duxbury

PREPARED FOR THE STATE OF CALIFORNIA DEPARTMENT OF TRANSPORTATION

R. Manzanarez
PROJECT ENGINEER

BRIDGE NO. 34-0006L/R
KILOMETER POST 13.2/13.9

SAN FRANCISCO OAKLAND BAY BRIDGE
EAST SPAN SEISMIC SAFETY PROJECT
SELF-ANCHORED SUSPENSION BRIDGE
(SUPERSTRUCTURE & TOWER)

LINEAR ACTUATORS AND DRIVES-06

Rev. Date: 5-18-98

ORIGINAL SCALE IN MILLIMETERS FOR REDUCED PLANS 0 10 20 30 40 50 60 70 80 90 100

CU 04
EA 0120F1

DISREGARD PRINTS BEARING EARLIER REVISION DATES 01/06/12

REVISION DATES (PRELIMINARY STAGE ONLY)

SHEET 722S2 OF

FILE => L:\BB\04-012001\SAS\Contract Plans and CCO\CCO\CCO#183S1\2-Update 01-11-12\DGN\aktrv124d.dgn

100 % PS&E

USERNAME => arivera DATE PLOTTED => 30 JAN 2012 TIME PLOTTED => 09:15:38

DIST.	COUNTY	ROUTE	KILOMETER POST TOTAL PROJECT	SHEET NO.	TOTAL SHEETS
04	SF	80	13.2/13.9	1141R1	1204

Caltrans Metric

REGISTERED ENGINEER - CIVIL

12-6-04
PLANS APPROVAL DATE

REGISTERED PROFESSIONAL ENGINEER Rafael Manzanarez No. C 36842 Exp. 6/30/12 CIVIL STATE OF CALIFORNIA

The State of California or its officers or agents shall not be responsible for the accuracy or completeness of electronic copies of this plan sheet.

T.Y. LIN / MOFFATT & NICHOL
825 BATTERY STREET
SAN FRANCISCO, CA 94111

Caltrans now has a web site! To get to the web site, go to: http://www.dot.ca.gov

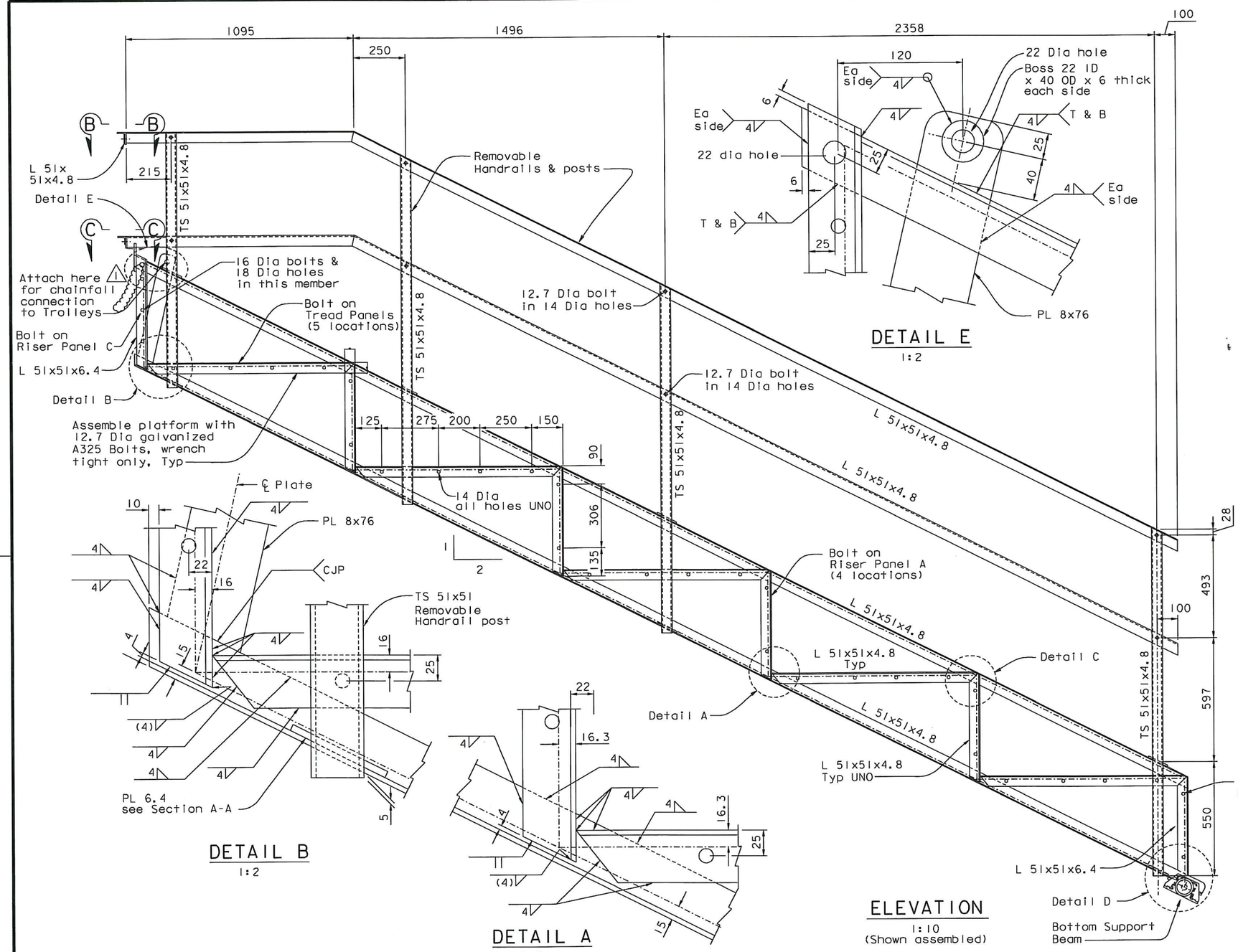

DETAIL B
1:2

DETAIL A
1:2

ELEVATION
1:10
(Shown assembled)

DETAIL E
1:2

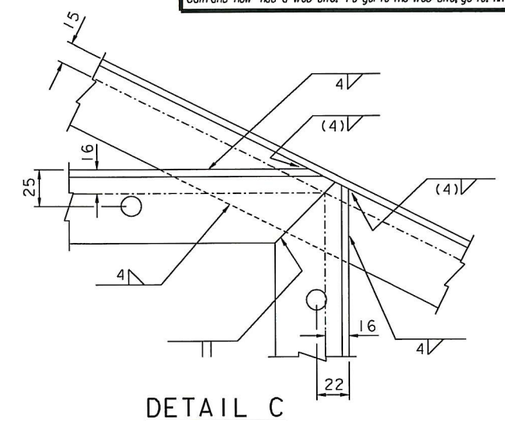

DETAIL C
1:2

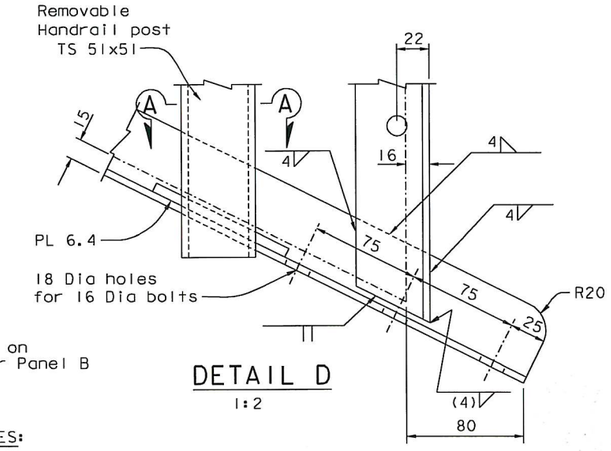

DETAIL D
1:2

NOTES:

1. See "Traveler Supplementary Platform-01" sheet for notes.
2. For Section A-A and riser panels, see "Traveler Supplementary Platform-03" sheet.
3. For Sections B-B and C-C, see "Traveler Supplementary Platform-04" sheet.
4. For Bottom Support Beam, see "Traveler Supplementary Platform - 05" sheet.

CONTRACT CHANGE ORDER NO. 183S1
SHEET 16 OF 20

REQUESTS FOR INFORMATION NOT ADDRESSED IN THIS CCO REMAIN IN FORCE

ALL DIMENSIONS ARE IN MILLIMETERS UNLESS OTHERWISE SHOWN

SAN FRANCISCO OAKLAND BAY BRIDGE
EAST SPAN SEISMIC SAFETY PROJECT
SELF-ANCHORED SUSPENSION BRIDGE
(SUPERSTRUCTURE & TOWER)

TRAVELER SUPPLEMENTARY PLATFORM-02

R. Valizadeh/V. Toan/Y.L./W.L./F.C.
DESIGN OVERSIGHT
Roger Valizadeh / Vong Toan / Y. Liu
SIGN OFF DATE 03/09/12

MARK	DATE	DESCRIPTIONS	BY	CH'D	CCO#
1	03/09/12	MISCELLANEOUS TRAVELER MODIFICATIONS	AB	RM	183S1

REVISIONS

DESIGN	BY J. Otter	CHECKED R. Manzanarez	
DETAILS	BY J. Otter	CHECKED J. Leventini	
QUANTITIES	BY J. Otter	CHECKED J. Leventini	

PREPARED FOR THE STATE OF CALIFORNIA DEPARTMENT OF TRANSPORTATION

R. Manzanarez
PROJECT ENGINEER

BRIDGE NO. 34-0006L/R
KILOMETER POST 13.2/13.9

Rev. Date: 5-18-98

ORIGINAL SCALE IN MILLIMETERS FOR REDUCED PLANS 0 10 20 30 40 50 60 70 80 90 100

CU 04
EA 0120F1

DISREGARD PRINTS BEARING EARLIER REVISION DATES

REVISION DATES (PRELIMINARY STAGE ONLY) 04/13/02 07/01/02 12/19/02

SHEET 724R1 OF

FILE => L:\BB\04-012001\SAS\Contract Plans and CCO\CCO\CCO#183S1\7-Revision 03-09-12\DGN\aktrv125b.dgn

100 % PS&E

USERNAME => DWinrow DATE PLOTTED => 09 MAR 2012 TIME PLOTTED => 10:13:41

DIST.	COUNTY	ROUTE	KILOMETER POST TOTAL PROJECT	SHEET NO.	TOTAL SHEETS
04	SF	80	13.2/13.9	1142R1	1204

Caltrans Metric

REGISTERED ENGINEER - CIVIL

12-6-04

PLANS APPROVAL DATE

REGISTERED PROFESSIONAL ENGINEER Rafael Manzanarez No. C 36842 Exp. 6/30/12 CIVIL STATE OF CALIFORNIA

The State of California or its officers or agents shall not be responsible for the accuracy or completeness of electronic copies of this plan sheet.

T.Y. LIN / MOFFATT & NICHOL
825 BATTERY STREET
SAN FRANCISCO, CA 94111

Caltrans now has a web site! To get to the web site, go to: http://www.dot.ca.gov

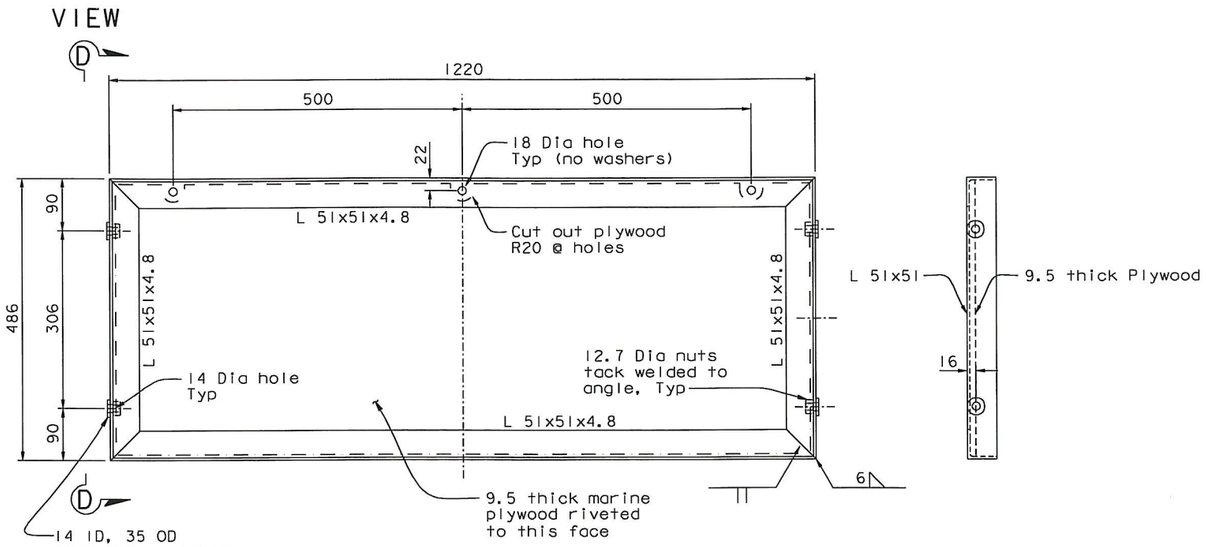

RISER PANEL A
1:5

VIEW D-D
1:5

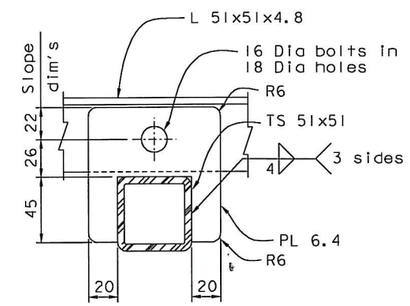

SECTION A-A

REMOVABLE HANDRAIL POST CONNECTION
1:2

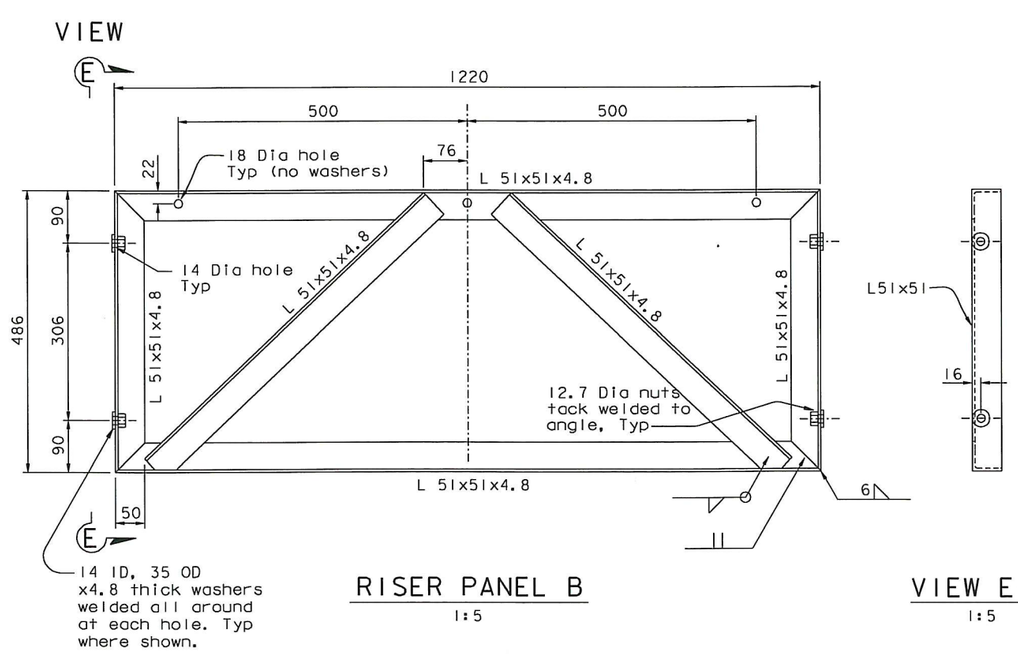

RISER PANEL B
1:5

VIEW E-E
1:5

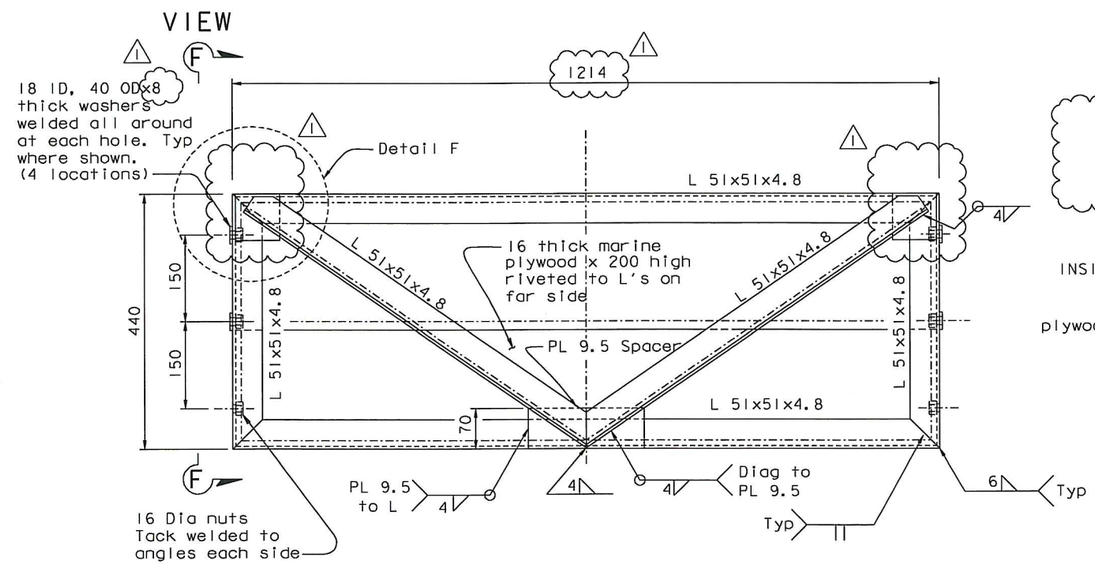

RISER PANEL C
1:5

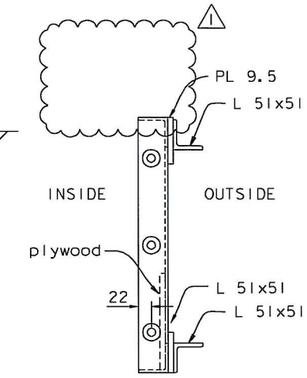

VIEW F-F
1:5

NOTES:

1. For Detail F, see "Traveler Supplementary Platform-04" sheet.

CONTRACT CHANGE ORDER NO. 183S1
SHEET 17 OF 20

REQUESTS FOR INFORMATION NOT ADDRESSED IN THIS CCO REMAIN IN FORCE

ALL DIMENSIONS ARE IN MILLIMETERS UNLESS OTHERWISE SHOWN

R. Valizadeh/V. Toan/Y.L./W.L./F.C.
DESIGN OVERSIGHT
Roger Valizadeh / Vong Toan / Y. Liu
SIGN OFF DATE 03/02/12

MARK	DATE	DESCRIPTIONS	BY	CH'D	CCO#
1	03/02/12	MISCELLANEOUS TRAVELER MODIFICATIONS	AB	RM	183S1

REVISIONS

	BY	CHECKED
DESIGN	J. Otter	R. Manzanarez
DETAILS	J. Otter	J. Leventini
QUANTITIES	J. Otter	J. Leventini

PREPARED FOR THE STATE OF CALIFORNIA DEPARTMENT OF TRANSPORTATION

R. Manzanarez
PROJECT ENGINEER

BRIDGE NO. 34-0006L/R
KILOMETER POST 13.2/13.9

SAN FRANCISCO OAKLAND BAY BRIDGE
EAST SPAN SEISMIC SAFETY PROJECT
SELF-ANCHORED SUSPENSION BRIDGE
(SUPERSTRUCTURE & TOWER)

TRAVELER SUPPLEMENTARY PLATFORM-03

Rev. Date: 5-18-98

ORIGINAL SCALE IN MILLIMETERS FOR REDUCED PLANS 0 10 20 30 40 50 60 70 80 90 100

CU 04
EA 0120F1

DISREGARD PRINTS BEARING EARLIER REVISION DATES

REVISION DATES (PRELIMINARY STAGE ONLY) 04/13/02 07/01/02 12/19/02

SHEET 725R1 OF

FILE => L:\BB\04-012001\SAS\Contract Plans and CCO\CCO\CCO#183S1\Revision 03-02-12\DGN\aktrv125c.dgn

100 % PS&E

USERNAME => DWinrow DATE PLOTTED => 01 MAR 2012 TIME PLOTTED => 12:48:52

DIST.	COUNTY	ROUTE	KILOMETER POST TOTAL PROJECT	SHEET NO.	TOTAL SHEETS
04	SF	80	13.2/13.9	1143R1	1204

Caltrans Metric

Rafael Manzanarez
REGISTERED ENGINEER - CIVIL

12-6-04
PLANS APPROVAL DATE

REGISTERED PROFESSIONAL ENGINEER Rafael Manzanarez No. C 36842 Exp. 6/30/12 CIVIL STATE OF CALIFORNIA

The State of California or its officers or agents shall not be responsible for the accuracy or completeness of electronic copies of this plan sheet.

T.Y. LIN / MOFFATT & NICHOL
825 BATTERY STREET
SAN FRANCISCO, CA 94111

Caltrans now has a web site! To get to the web site, go to: http://www.dot.ca.gov

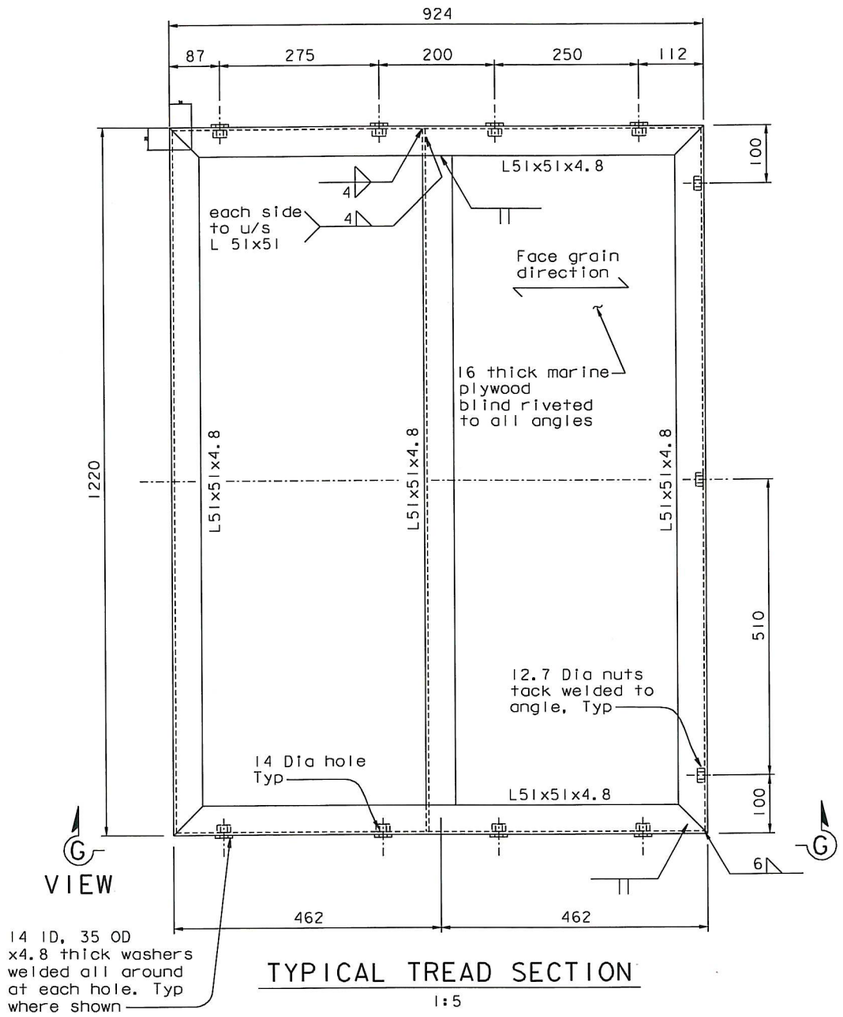

TYPICAL TREAD SECTION
1:5

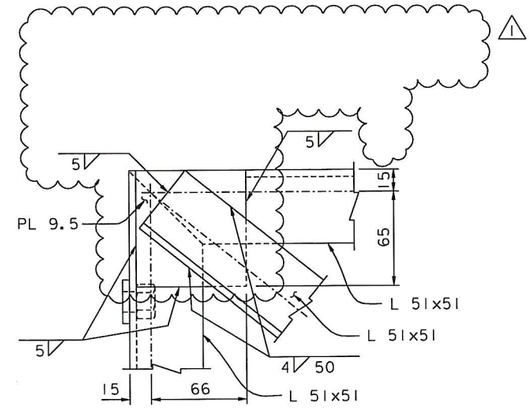

DETAIL F
1:2

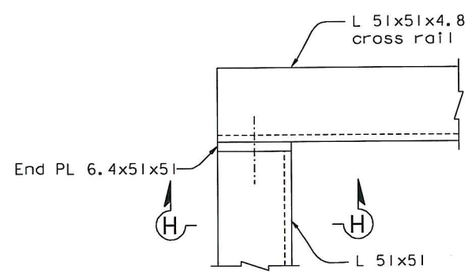

SECTION B-B
1:2

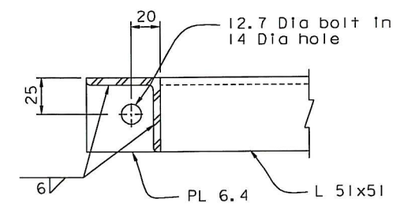

SECTION H-H
1:2

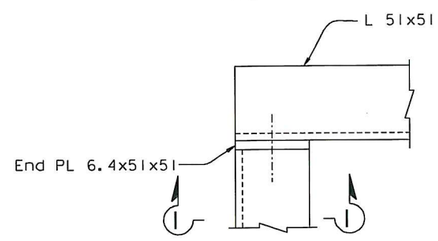

SECTION C-C
1:2

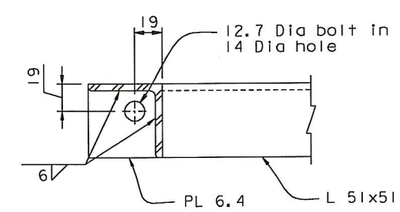

SECTION I-I
1:2

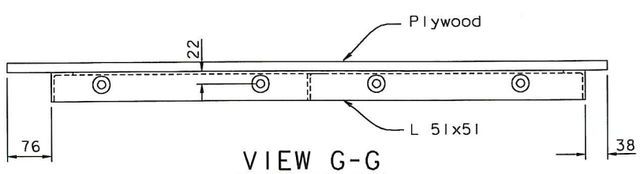

VIEW G-G
1:5

CONTRACT CHANGE ORDER NO. 183S1
SHEET 18 OF 20

REQUESTS FOR INFORMATION NOT ADDRESSED IN THIS CCO REMAIN IN FORCE

ALL DIMENSIONS ARE IN MILLIMETERS UNLESS OTHERWISE SHOWN

MARK	DATE	DESCRIPTIONS	BY	CH'D	CCO#
1	03/02/12	MISCELLANEOUS TRAVELER MODIFICATIONS	AB	RM	183S1

REVISIONS

R. Valizadeh/V. Toan/Y.L./W.L./F.C.
DESIGN OVERSIGHT
Ryan Valizadeh / Vong P. Toan / Y. Liu
SIGN OFF DATE 03/02/12

Rev. Date: 5-18-98

DESIGN BY J. Otter CHECKED R. Manzanarez
DETAILS BY J. Otter CHECKED J. Leventini
QUANTITIES BY J. Otter CHECKED J. Leventini

PREPARED FOR THE STATE OF CALIFORNIA DEPARTMENT OF TRANSPORTATION

R. Manzanarez
PROJECT ENGINEER

BRIDGE NO. 34-0006L/R
KILOMETER POST 13.2/13.9

CU 04
EA 0120F1

ORIGINAL SCALE IN MILLIMETERS FOR REDUCED PLANS 0 10 20 30 40 50 60 70 80 90 100

DISREGARD PRINTS BEARING EARLIER REVISION DATES

REVISION DATES (PRELIMINARY STAGE ONLY) 04/13/02 07/07/02 12/19/02

SHEET 726R1 OF

SAN FRANCISCO OAKLAND BAY BRIDGE
EAST SPAN SEISMIC SAFETY PROJECT
SELF-ANCHORED SUSPENSION BRIDGE
(SUPERSTRUCTURE & TOWER)

TRAVELER SUPPLEMENTARY PLATFORM-04

100 % PS&E

USERNAME => DWinrow DATE PLOTTED => 01 MAR 2012 TIME PLOTTED => 12:51:40

FILE => I:\bb\04-01200I\sas\contract plans and cco\cco\cco#183s1\revision 03-02-12\dgn\aktrv125d.dgn

DIST.	COUNTY	ROUTE	KILOMETER POST TOTAL PROJECT	SHEET NO.	TOTAL SHEETS
04	SF	80	13.2/13.9	1159R3	1204

REGISTERED ENGINEER - MECHANICAL

12-6-04

PLANS APPROVAL DATE

REGISTERED PROFESSIONAL ENGINEER Roupen Donikian No. C 56519 Exp. 06/30/09 CIVIL STATE OF CALIFORNIA

The State of California or its officers or agents shall not be responsible for the accuracy or completeness of electronic copies of this plan sheet.

T.Y. LIN / MOFFATT & NICHOL
825 BATTERY STREET
SAN FRANCISCO, CA 94111

Caltrans now has a web site! To get to the web site, go to: http://www.dot.ca.gov

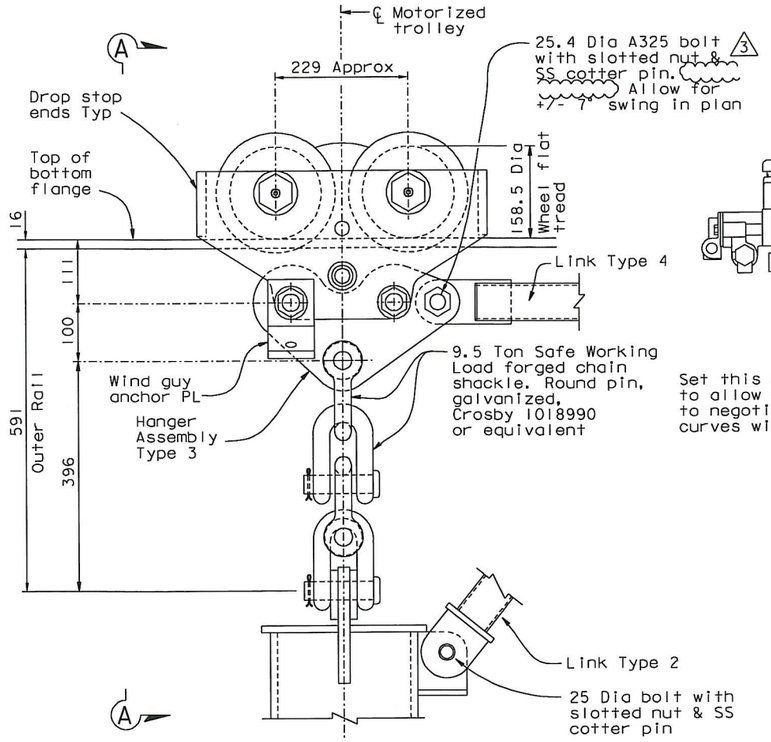

INNER RAIL MOTORIZED TROLLEY DETAIL

1:5 (2 Required)

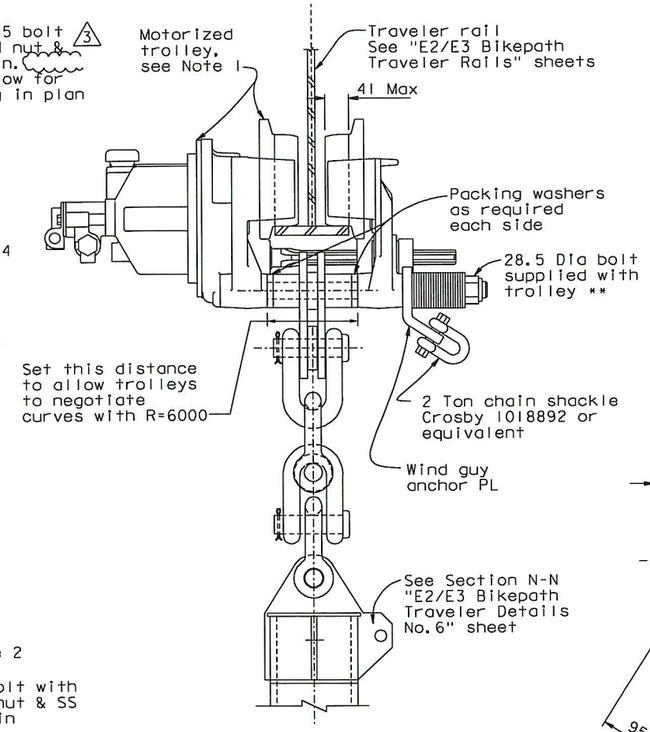

SECTION A-A

1:5

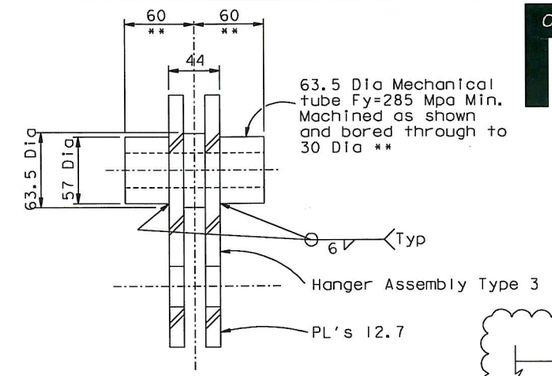

SECTION B-B

1:2.5

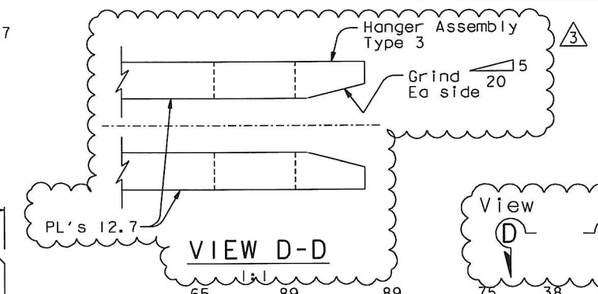

VIEW D-D

1:1

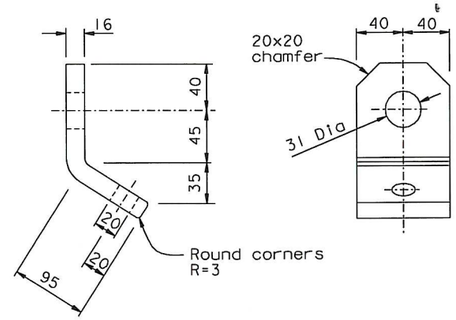

WIND GUY ANCHOR PLATE DETAIL

1:2.5

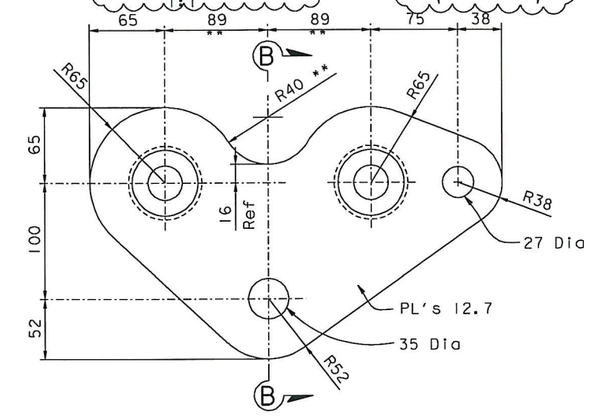

HANGER ASSEMBLY TYPE 3

1:2.5 (2 Required)

** Adapt dimensions noted thus to actual measured dimensions of the motorized trolleys

VIEW B-B

1:5

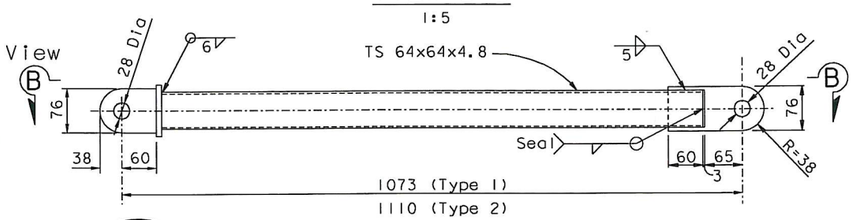

LINK TYPE 1 & 2

See Note 2

1:5
(2 required Type 1)
(2 required Type 2)

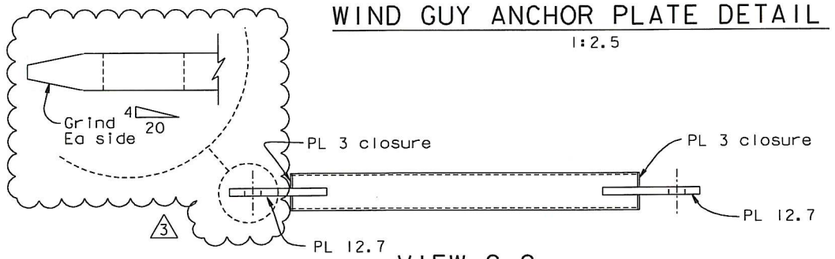

VIEW C-C

1:5

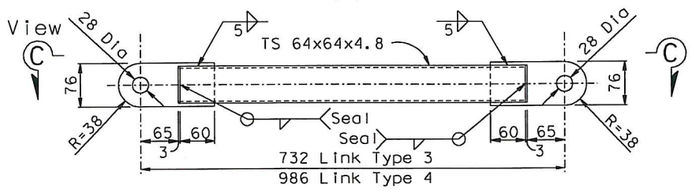

LINK TYPE 3 & 4

(See Note 2)

1:5
(2 required Type 3)
(2 required Type 4)

ALL DIMENSIONS ARE IN MILLIMETERS UNLESS OTHERWISE SHOWN

NOTES:

1. The motorized trolley shall be Ingersoll Rand Model ATET-MR 3/6 piston air motor driven trolley rated for 3000 Kg for "Man Rider" use. Wheels shall be flat tread type.
2. For motor controls, see E2/E3 "Bikepath Traveler Air system" sheet.
3. Verify actual dimensions of equipment supplied by Ingersoll Rand and adjust dimensions as required.
4. For traveler rails, see "E2/E3 Bikepath Traveler Rails" sheets.
5. Quantities given are per one traveler.

REGISTERED PROFESSIONAL ENGINEER Tien Hung Ho No. C 43990 Exp. 06/30/13 CIVIL STATE OF CALIFORNIA

CONTRACT CHANGE ORDER NO. 183S1
SHEET 19 OF 20

FOR REVISIONS 2 & 3 ONLY

REQUESTS FOR INFORMATION NOT ADDRESSED IN THIS CCO REMAIN IN FORCE

REVISION 2 SUPERSEDES REVISION 1

MARK	DATE	DESCRIPTIONS	BY	CH'D	CCO#
3	01/11/12	MISCELLANEOUS TRAVELER MODIFICATIONS	AB	TH	183S1
2	06/19/09	TRAVELER MODIFICATIONS	TH	AS	24S1
1	01/20/07	RAIL CHANGE & MISCELLANEOUS DETAILS	RD	NV	24

REVISIONS

R. Vallzadeh/V. Toan/Y.L./W.L./F.C.
DESIGN OVERSIGHT
SIGN OFF DATE 01/11/12

Rev. Date: 5-18-98

	BY	CHECKED
DESIGN	J. Otter	R. Donikian
DETAILS	J. Otter	M. Roberts
QUANTITIES	J. Otter	R. Roberts

ORIGINAL SCALE IN MILLIMETERS FOR REDUCED PLANS 0 10 20 30 40 50 60 70 80 90 100

PREPARED FOR THE STATE OF CALIFORNIA DEPARTMENT OF TRANSPORTATION

R. Manzanarez
PROJECT ENGINEER

BRIDGE NO. 34-0006L/R
KILOMETER POST 13.2/13.9

CU 04
EA 0120F1

DISREGARD PRINTS BEARING EARLIER REVISION DATES

REVISION DATES (PRELIMINARY STAGE ONLY) 04/25/02 01/20/02 12/19/02

SHEET 742R3 OF

SAN FRANCISCO OAKLAND BAY BRIDGE
EAST SPAN SEISMIC SAFETY PROJECT
SELF-ANCHORED SUSPENSION BRIDGE
(SUPERSTRUCTURE & TOWER)

E2/E3 BIKEPATH TRAVELER MECHANICAL-01

FILE => I:\bb\04-01200I\sas\contract plans and cco\cco\cco#183s1\2-update 01-11-12\dgn\aktrv140.dgn

USERNAME => arivera DATE PLOTTED => 11 JAN 2012 TIME PLOTTED => 10:53:03

100 % PS&E

DIST.	COUNTY	ROUTE	KILOMETER POST TOTAL PROJECT	SHEET NO.	TOTAL SHEETS
04	SF	80	13.2/13.9	1161R5	1204

REGISTERED ENGINEER - MECHANICAL

12-6-04
PLANS APPROVAL DATE

REGISTERED PROFESSIONAL ENGINEER Roupen Donikian No. C 56519 Exp. 06/30/09 CIVIL STATE OF CALIFORNIA

The State of California or its officers or agents shall not be responsible for the accuracy or completeness of electronic copies of this plan sheet.

T.Y. LIN / MOFFATT & NICHOL
825 BATTERY STREET
SAN FRANCISCO, CA 94111

Caltrans now has a web site! To get to the web site, go to: http://www.dot.ca.gov

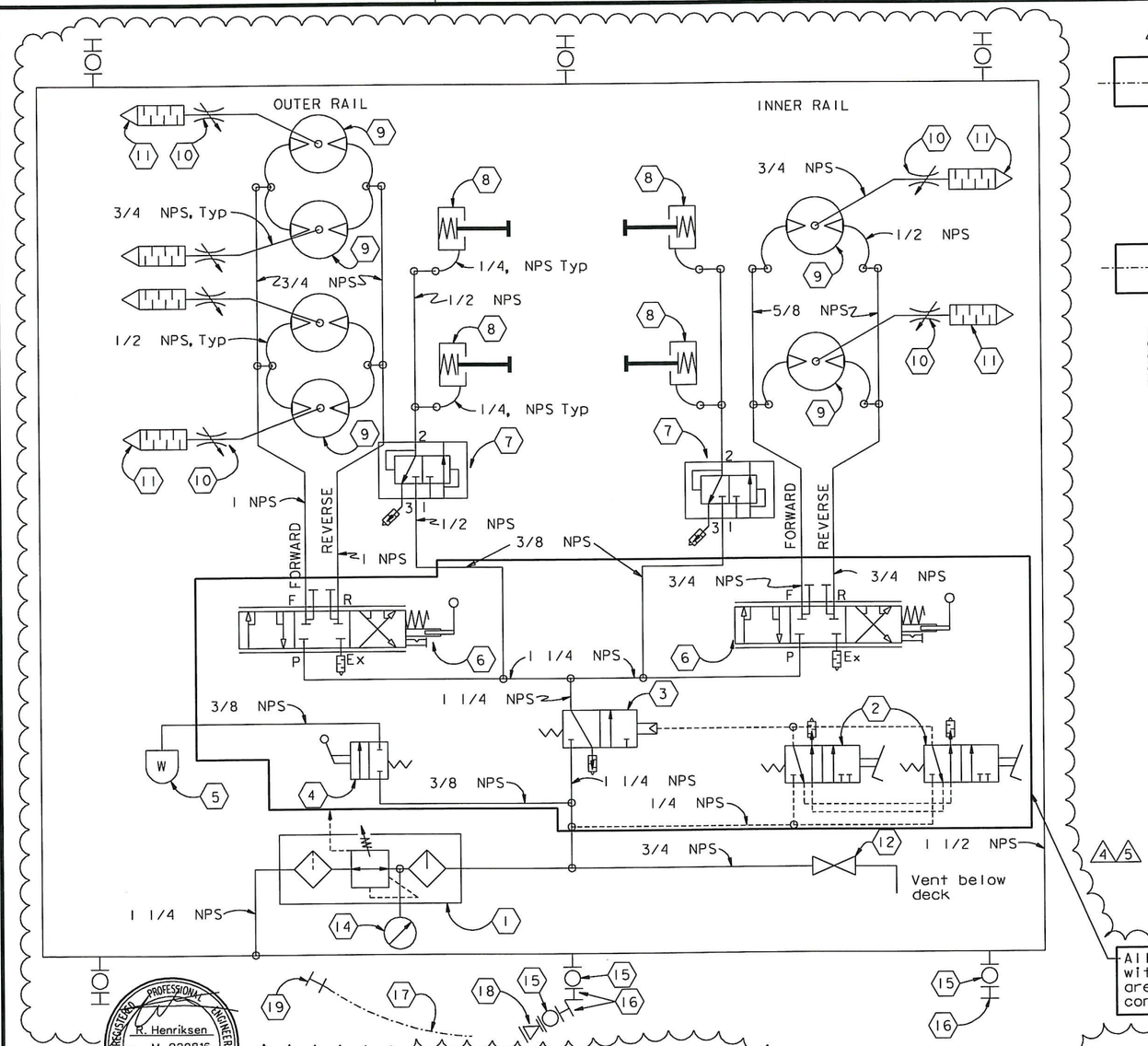

PNEUMATIC SCHEMATIC

NTS

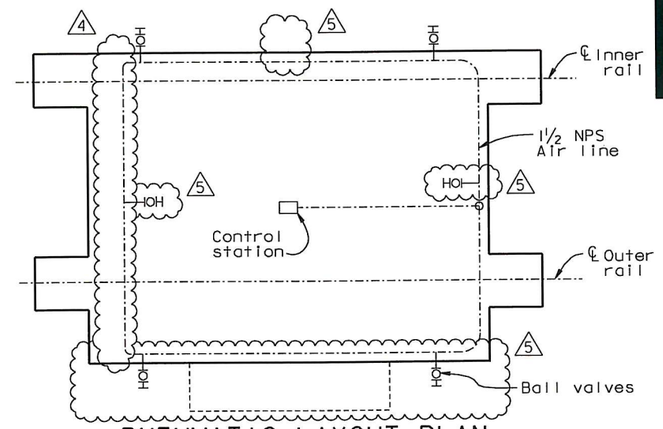

PNEUMATIC LAYOUT PLAN

NTS

All items Contained within Boundary Line are Located in the Control Panel

NOTES:

1. All double check valves shall be installed horizontally.
2. All vents without silencers shall have a minimum of 300 mm of pipe and terminate with a screened downturned elbow.
3. Flexible hose not to exceed 750 mm in length may be used for final connections to equipment.

LEGEND:

Part	Description	Size	Quantity per Traveler
1	Lubricator, Filter, Pressure Regulator		1
2	Pedal operated Pilot Valve - To control Valve 3	1/4"	2
3	Main System control valve - Poppet Valve	1 1/4"	1
4	Whistle valve	3/8"	1
5	Whistle	—	1
6	Full Flow throttle Valve for Trolley motors	1 1/4"	2
7	Quick Dump Valve for Brakes	1/2"	2
8	Ingersoll Rand Parking Brake	—	4
9	Ingersoll Rand Motorized Trolley	—	6
10	Exhaust Choke Valve for speed control	3/4"	6
11	Silencer	—	13
12	Blow Down Valve	3/4"	1
13	Not Used		
14	Gage		1
15	Ball Valve	1 1/2"	10
16	Coupling	1 1/2"	10
17	Flexible Supply Hose - 8000 long	2"	4
18	Reducer - 2" to 1 1/2"		4
19	Boss B27 Wing Nut & GB26 Stem & Hose Clamp	2"	4

4. All pipe sizes are typical for similar locations.
5. On board rigid pipe to be SCHED 40.
6. Provide support to 1 1/2" pipe within 150 mm of each flexible hose connection and at 1800 intervals maximum.
7. Provide downturned elbow and reducer as required at each equipment connection.
8. Provide sufficient flexible connection hose to accomodate traveler movement (8000 mm length).
9. Mount throttle and whistle valves so as to be accessible by hand.
10. Mount pedal operated pilot valves (item 2 Dead Man Switch) so as to be operated by foot. One for operator facing east, one for operator facing west.
11. Provide weather cover for all controls.
12. Pneumatic schematics illustrate the principles of the pneumatic systems. System manufacturer is to: review pneumatic schematics; carry out detailed design of the system; make any detailed modifications necssary to ensure the proper operation of the systems.
13. Fabricator to design & supply a console for the control station using steel angle frame & plywood enclosure.
14. Traveler maximum operating speed 6.1 m/min (20 fpm) fully loaded going upgrade.
15. Anticipated air consumption at full speed is 25 scfm per trolley.
16. For valve item 6, use same valve type as will be used for the main trolley throttles on the SAS and E2/E3 travelers.

REGISTERED PROFESSIONAL ENGINEER R. Henriksen No. M 029816 Exp. 06/30/12 MECHANICAL STATE OF CALIFORNIA

FOR REVISION 3, 4, & 5 ONLY

REVISION 2 SUPERSEDES REVISION 1

CONTRACT CHANGE ORDER NO. 183S1
SHEET 20 OF 20

REGISTERED PROFESSIONAL ENGINEER Tien Hung Ho No. C 43990 Exp. 06/30/11 CIVIL STATE OF CALIFORNIA

FOR REVISION 2 ONLY

REQUESTS FOR INFORMATION NOT ADDRESSED IN THIS CCO REMAIN IN FORCE

MARK	DATE	DESCRIPTIONS	BY	CH'D	CCO#
5	02/15/12	MISCELLANEOUS TRAVELER MODIFICATIONS	RH	AB	183S1
4	01/11/12	MISCELLANEOUS TRAVELER MODIFICATIONS	RH	AS	183S1
3	07/30/10	TRAVELER MODIFICATIONS	RH	RS	24S1
2	08/21/09	TRAVELER MODIFICATIONS	TH	AS	24S1
1	07/20/07	RAIL CHANGE & MISCELLANEOUS DETAILS	RD	NV	24

REVISIONS

R. Vallzadeh/V. Toan/Y.L./W.L./F.C.
DESIGN OVERSIGHT
SIGN OFF DATE 02/15/12

	BY	CHECKED
DESIGN	J. Otter	R. Donikian
DETAILS	J. Otter	R. Donikian
QUANTITIES	J. Otter	M. Roberts

PREPARED FOR THE STATE OF CALIFORNIA DEPARTMENT OF TRANSPORTATION

R. Manzanarez
PROJECT ENGINEER

ALL DIMENSIONS ARE IN MILLIMETERS UNLESS OTHERWISE SHOWN

BRIDGE NO. 34-0006L/R
KILOMETER POST 13.2/13.9

SAN FRANCISCO OAKLAND BAY BRIDGE
EAST SPAN SEISMIC SAFETY PROJECT
SELF-ANCHORED SUSPENSION BRIDGE
(SUPERSTRUCTURE & TOWER)

E2/E3 BIKEPATH TRAVELER AIR SYSTEM

Rev. Date: 5-18-98

ORIGINAL SCALE IN MILLIMETERS FOR REDUCED PLANS 0 10 20 30 40 50 60 70 80 90 100

CU 04
EA 0120F1

DISREGARD PRINTS BEARING EARLIER REVISION DATES 04/19/02 07/07/02 12/19/02

REVISION DATES (PRELIMINARY STAGE ONLY)

SHEET 744R5 OF

FILE => I:\bb\04-01200I\sas\contract plans and cco\cco\cco#183s1\5-update 02-15-12\dgn\aktrvl42.dgn

100 % PS&E

USERNAME => ALishanski DATE PLOTTED => 15 FEB 2012 TIME PLOTTED => 09:00:18