DIST.	COUNTY	ROUTE	KILOMETER POST TOTAL PROJECT	SHEET NO.	TOTAL SHEETS
04	SF	80	13.2/13.9	1104R4	1204

Caltrans Metric

REGISTERED ENGINEER - CIVIL

12-6-04
PLANS APPROVAL DATE

REGISTERED PROFESSIONAL ENGINEER Bashkim Prishtina No. C 053561 Exp. 6/30/11 CIVIL STATE OF CALIFORNIA

The State of California or its officers or agents shall not be responsible for the accuracy or completeness of electronic copies of this plan sheet.

T.Y. LIN / MOFFATT & NICHOL
825 BATTERY STREET
SAN FRANCISCO, CA 94111

Caltrans now has a web site! To get to the web site, go to: http://www.dot.ca.gov

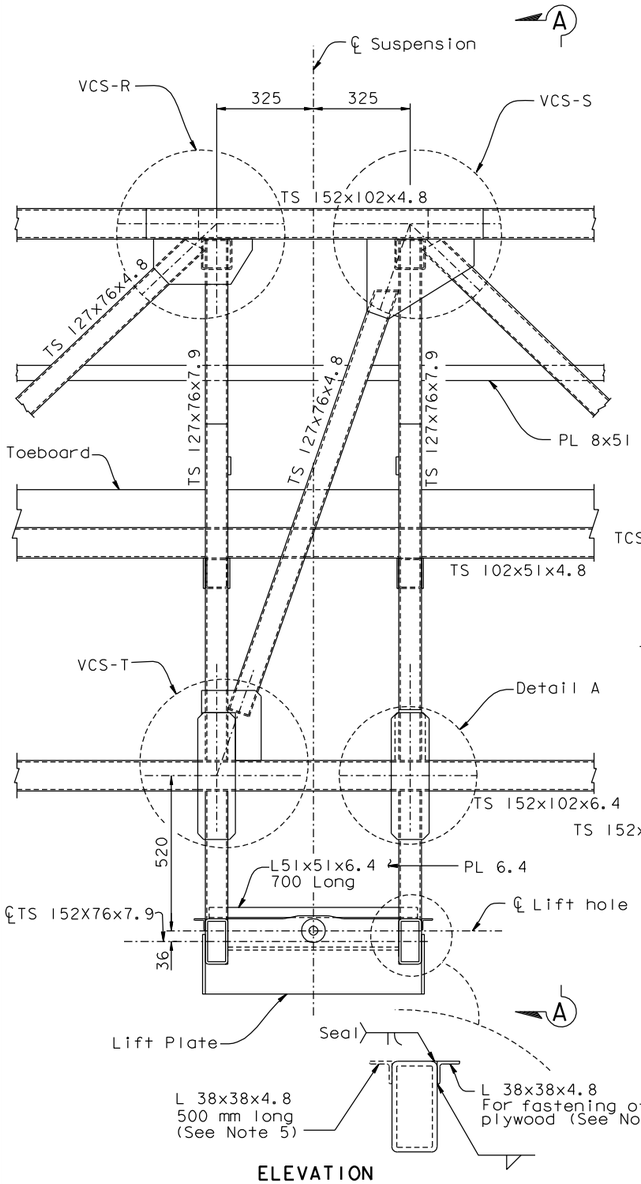

ELEVATION
View from Exterior

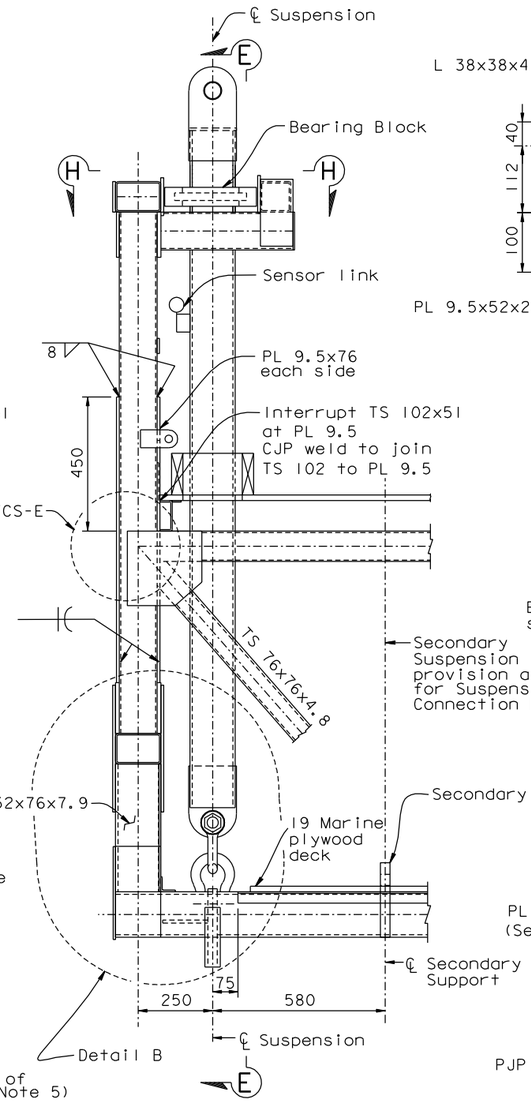

SECTION A-A

SUSPENSION CONNECTION A

1:10

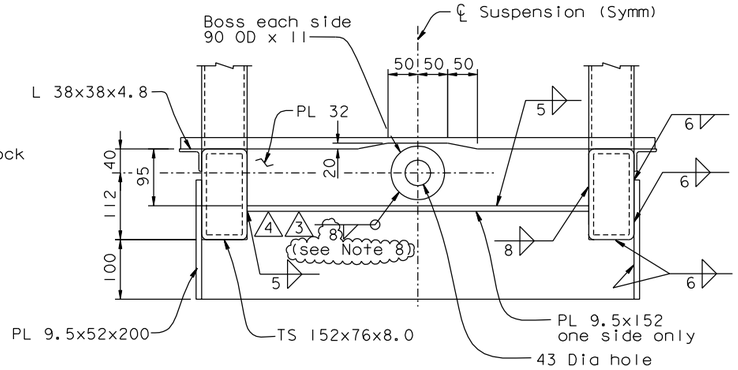

LIFT PLATE

1:5
SAS Travelers

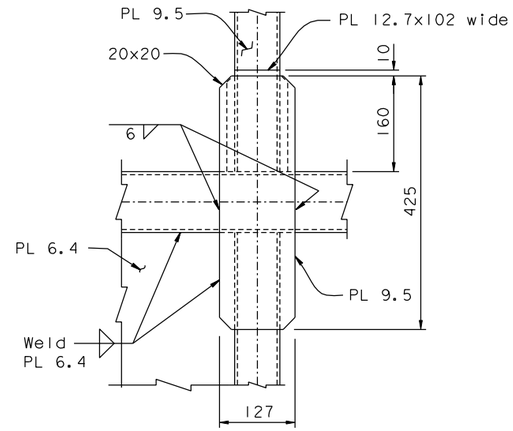

See Detail B for welding

DETAIL A

1:5

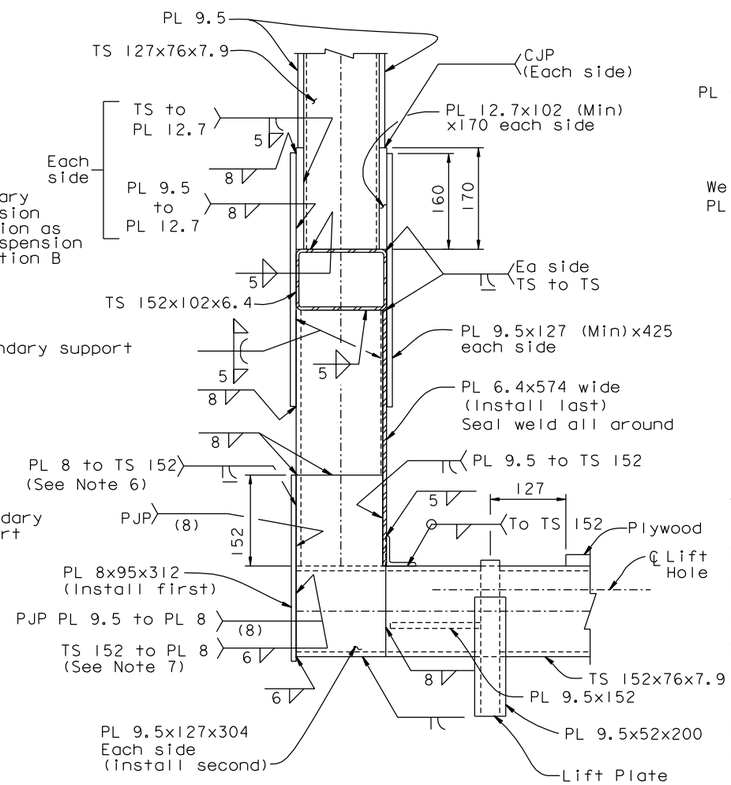

DETAIL B

1:5

NOTES:

1. For connection Type VCS & TCS, see "Traveler Connection Details" sheets.
2. For Section E-E, see "Traveler Suspension Connection Details No.6" sheet.
3. For Section H-H, see "Traveler Suspension Connection Details No.4" sheet.
4. For secondary support, see "Traveler Suspension Connection Details No.2" sheet.
5. Angle shall be clipped at gusset plate and secondary support. At these locations an additional 500 mm long angle shall be provided on the opposite side of the TS 152x76 to support the plywood.
6. Curtail 8 mm plate at bottom of PL 9.5x127x425 and CJP weld horizontally to join the two plates.
7. At the Contractor's option, a 6 mm flush ground PJP weld for connecting PL 8 to TS 152x76 may be used.
8. At the Contractor's option, the 8 mm fillet between the Boss PL and the PL 32 may be built up to a 10 mm fillet over a 270 degrees arc around the boss PL, subject to review and approval of the Engineer. (4)

CONTRACT CHANGE ORDER NO. _____
SHEET ___ OF ___

REQUESTS FOR INFORMATION NOT ADDRESSED IN THIS CCO REMAIN IN FORCE

MARK	DATE	DESCRIPTIONS	BY	CH'D	CCO#
4	02/17/11	TRAVELER BOSS PL WELD DETAIL	BP	AS	183
3	12/23/10	TRAVELER BOSS PL WELD DETAIL	BP	AS	183
2	02/12/10	TRAVELER MODIFICATIONS	BP	AS	24S1
1	06/19/09	TRAVELER MODIFICATIONS	BP	AS	24S1

REVISIONS

R. Valizadeh/V. Toan/Y.L./W.L./F.C.
DESIGN OVERSIGHT
SIGN OFF DATE 02/17/11

	BY	CHECKED
DESIGN	J. Otter	B. Prishtina
DETAILS	J. Otter	M. Roberts
QUANTITIES	J. Otter	M. Roberts

PREPARED FOR THE STATE OF CALIFORNIA DEPARTMENT OF TRANSPORTATION

R. Manzanarez
PROJECT ENGINEER

ALL DIMENSIONS ARE IN MILLIMETERS UNLESS OTHERWISE SHOWN

BRIDGE NO. 34-0006L/R
KILOMETER POST 13.2/13.9

SAN FRANCISCO OAKLAND BAY BRIDGE
EAST SPAN SEISMIC SAFETY PROJECT
SELF-ANCHORED SUSPENSION BRIDGE
(SUPERSTRUCTURE & TOWER)

TRAVELER SUSPENSION CONNECTION DETAILS NO. 1

Rev. Date: 5-18-98

ORIGINAL SCALE IN MILLIMETERS FOR REDUCED PLANS 0 10 20 30 40 50 60 70 80 90 100

CU 04
EA 0120F1

DISREGARD PRINTS BEARING EARLIER REVISION DATES

REVISION DATES (PRELIMINARY STAGE ONLY) 04/15/02 07/09/02 12/19/02

SHEET 687R4 OF

FILE => L:\BB\04-012001\SAS\Contract Plans and CCO\CCO\CCO#183\3-Revision 02-17-11\DGN\aktrv096.dgn

100% PS&E

USERNAME => DWinrow DATE PLOTTED => 17 FEB 2011 TIME PLOTTED => 12:08:47

DIST.	COUNTY	ROUTE	KILOMETER POST TOTAL PROJECT	SHEET NO.	TOTAL SHEETS
04	SF	80	13.2/13.9	1135R4	1204

Caltrans Metric

REGISTERED ENGINEER - CIVIL

12-19-08
PLANS APPROVAL DATE

REGISTERED PROFESSIONAL ENGINEER Roupen Donikian No. C 56519 Exp. 06/30/09 STATE OF CALIFORNIA

The State of California or its officers or agents shall not be responsible for the accuracy or completeness of electronic copies of this plan sheet.

T.Y. LIN / MOFFATT & NICHOL
825 BATTERY STREET
SAN FRANCISCO, CA 94111

Caltrans now has a web site! To get to the web site, go to: http://www.dot.ca.gov

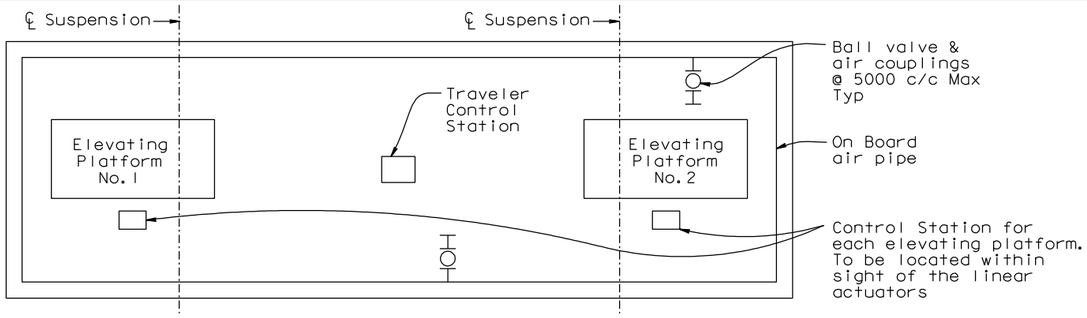

KEY PLAN SCHEMATIC

NOTES:

For location of Traveler Control Stations see Assembly sheets for each traveler

PARTS FOR ELEVATING PLATFORM CONTROL

Part	Description	Size	Quantity/Traveler	MIN CV
L5-L6	Elevator Platform control Limit Valve	1/4"	1 or 2	-
6A	Shuttle Valve: Will be actuated by either L5 or L6 as necessary.	1/4"	0 or 1	-
31	Pressure Regulator set to limit pressure to 620kPag (90 psig)	1 1/4"	1 or 2	21
△4 31A	Pressure Regulator set to limit pressure to 485kPag (70 psig)	3/4"	1 or 2	21
32	Full flow throttle and reverse valve for the linear actuator air motors with built-in emergency stop button. Deadman operation. Use same valve type as is used for trolley throttles.	1 1/4"	1 or 2	25
33	Linear Actuator Air Motor. Max air consumption 183 scfm per motor		1 or 2	-
34	Exhaust Choke Throttling Valve	To suit motor port	1 or 2	-
35	Silencer	To suit motor port	1 or 2	-
36	Inline Lubricator: One Required at each air motor inlet.	3/4"	2 or 4	4
37	NOT USED			-
38	Piloted Safety Valve to allow flow only when Pedal Valve 40 is actuated. - Poppet Valve	1 1/4"	1 or 2	19
39	NOT USED			-
40	Pedal Control Valve, located at the Elevated Platform Control Station. Operation: 1. To lift Elevated Platform, Pedal must be held depressed while operating the Throttle Valve. (32)	1/4"	1 or 2	-
41	3-Way Manual Diversion Ball Valve with Latch-Lock Lever and Nut to allow isolation of Elevating Platforms for maintenance or repair without having to shut down the other air systems on the Traveler	1 1/4"	1	21

TRAVELER AIR SYSTEM NOTES:

1. All double check valves shall be installed horizontally.
2. All vents without silencers unless noted otherwise shall have a minimum of 300 mm of pipe and terminate with a screened downturned elbow.
3. Flexible hose (not to exceed 750 mm in length unless otherwise noted or shown) may be used for final connections to equipment.
4. All pipe sizes are typical for similar locations.
5. On board rigid pipe to be SCHED 40.
6. Provide support to 2" pipe within 150 mm of each pipe hose connection and at 1800 intervals maximum.
7. Provide downturned elbow and reducer as required at each equipment connection.
8. Provide sufficient flexible connection hose to accommodate traveler movement (12,000 mm length).
9. Mount throttle and whistle valves so as to be accessible by hand.
10. Mount main system pilot valves (Dead Man Switch) so as to be operated by foot.
11. Fabricator to design and provide a steel framed, plywood sheathed control console. Provide weather cover for all controls.
12. Traveler operating speed 6.1 m/min (20 fpm) fully loaded going up grade.
13. Anticipated trolley air consumption at full speed is 33 scfm per motorized trolley.
14. Pneumatic schematics illustrate the principles of the pneumatic systems. System manufacturer is to review pneumatic schematics; carry out detailed layout of the system; make any detailed modifications necessary to ensure the proper operation of the systems.
15. For functional description of components and other requirements, see specification.
16. Elevating platform drives and actuators are designed to operate with air pressure in the range from 490 to 690 kPa (70 to 100 psig). Provide pressure relief valves to avoid supply of excessive pressure to the drive motors so as to avoid excessive motor stall-out torque.
17. SAS EB & WB Travelers have 4 suspension systems (12 motors) and one elevating platform each.
18. E2/E3 EB & WB Travelers have 8 suspension systems (24 motors) & two elevating platforms each. These travelers change suspension systems when Hinge A is crossed.
19. Quick disconnects items 11 & 12 are only on the E2/E3 Travelers. SAS Travelers are to be piped with fixed connections.
20. Main system pilot valves (item (5)) - 1 required for operator facing east and 1 required for operator facing west.

REGISTERED PROFESSIONAL ENGINEER R. Henriksen No. M 029816 Exp. 06/30/12 MECHANICAL STATE OF CALIFORNIA

FOR REVISIONS ONLY

CONTRACT CHANGE ORDER NO. _____
SHEET ___ OF ___

REQUESTS FOR INFORMATION NOT ADDRESSED IN THIS CCO REMAIN IN FORCE

MARK	DATE	DESCRIPTIONS	BY	CH'D	CCO#
△4	02/25/11	TRAVELER MODIFICATIONS	RH	AS	183
△3	02/12/10	TRAVELER MODIFICATIONS	RH	AS	24S1
△2	08/21/09	TRAVELER MODIFICATIONS	RH	AS	24S1
△1	07/20/07	RAIL CHANGE & MISCELLANEOUS DETAILS	RD	NV	24

REVISIONS

R. Valizadeh/V. Toan/Y.L./W.L./F.C.
DESIGN OVERSIGHT
Roya Valizadeh / Vong Toan / Y. Liu
SIGN OFF DATE 02/28/11

Rev. Date: 5-18-98

	BY	CHECKED
DESIGN	R. Scott	R. Henriksen
DETAILS	Z. Istre	J. Otter
QUANTITIES	R. Scott	T. Ho

PREPARED FOR THE STATE OF CALIFORNIA DEPARTMENT OF TRANSPORTATION

ALL DIMENSIONS ARE IN MILLIMETERS UNLESS OTHERWISE SHOWN

R. Manzanarez
PROJECT ENGINEER

BRIDGE NO. 34-0006L/R
KILOMETER POST 13.2/13.9

SAN FRANCISCO OAKLAND BAY BRIDGE
EAST SPAN SEISMIC SAFETY PROJECT
SELF-ANCHORED SUSPENSION BRIDGE
(SUPERSTRUCTURE & TOWER)

TRAVELER AIR SYSTEM-02A

ORIGINAL SCALE IN MILLIMETERS FOR REDUCED PLANS 0 10 20 30 40 50 60 70 80 90 100

CU 04
EA 0120F1

DISREGARD PRINTS BEARING EARLIER REVISION DATES 12/19/08

REVISION DATES (PRELIMINARY STAGE ONLY)

SHEET 718R4 OF

FILE => L:\BB\04-012001\SAS\Contract Plans and CCO\CCO\CCO#183\4-Revision 02-25-11\DGN\aktrv121a.dgn

USERNAME => DWinrow DATE PLOTTED => 25 FEB 2011 TIME PLOTTED => 11:46:19

100% PS&E

DIST.	COUNTY	ROUTE	KILOMETER POST TOTAL PROJECT	SHEET NO.	TOTAL SHEETS
04	SF	80	13.2/13.9	1135S1R2	1204

REGISTERED ENGINEER - CIVIL

06-19-09

PLANS APPROVAL DATE

The State of California or its officers or agents shall not be responsible for the accuracy or completeness of electronic copies of this plan sheet.

REGISTERED PROFESSIONAL ENGINEER R. Henriksen No. M 029816 Exp. 06/30/12 MECHANICAL STATE OF CALIFORNIA

T.Y. LIN / MOFFATT & NICHOL
825 BATTERY STREET
SAN FRANCISCO, CA 94111

Caltrans now has a web site! To get to the web site, go to: http://www.dot.ca.gov

Safety Note - Platform Limit Switches

This circuit prevents movement of the traveler at any time except when the elevating platforms are fully down. In order to pass the pier with the SAS travelers (when elevating platform must be partially raised), personnel on the traveler platform must temporarily over-ride the elevating platform limit switch.

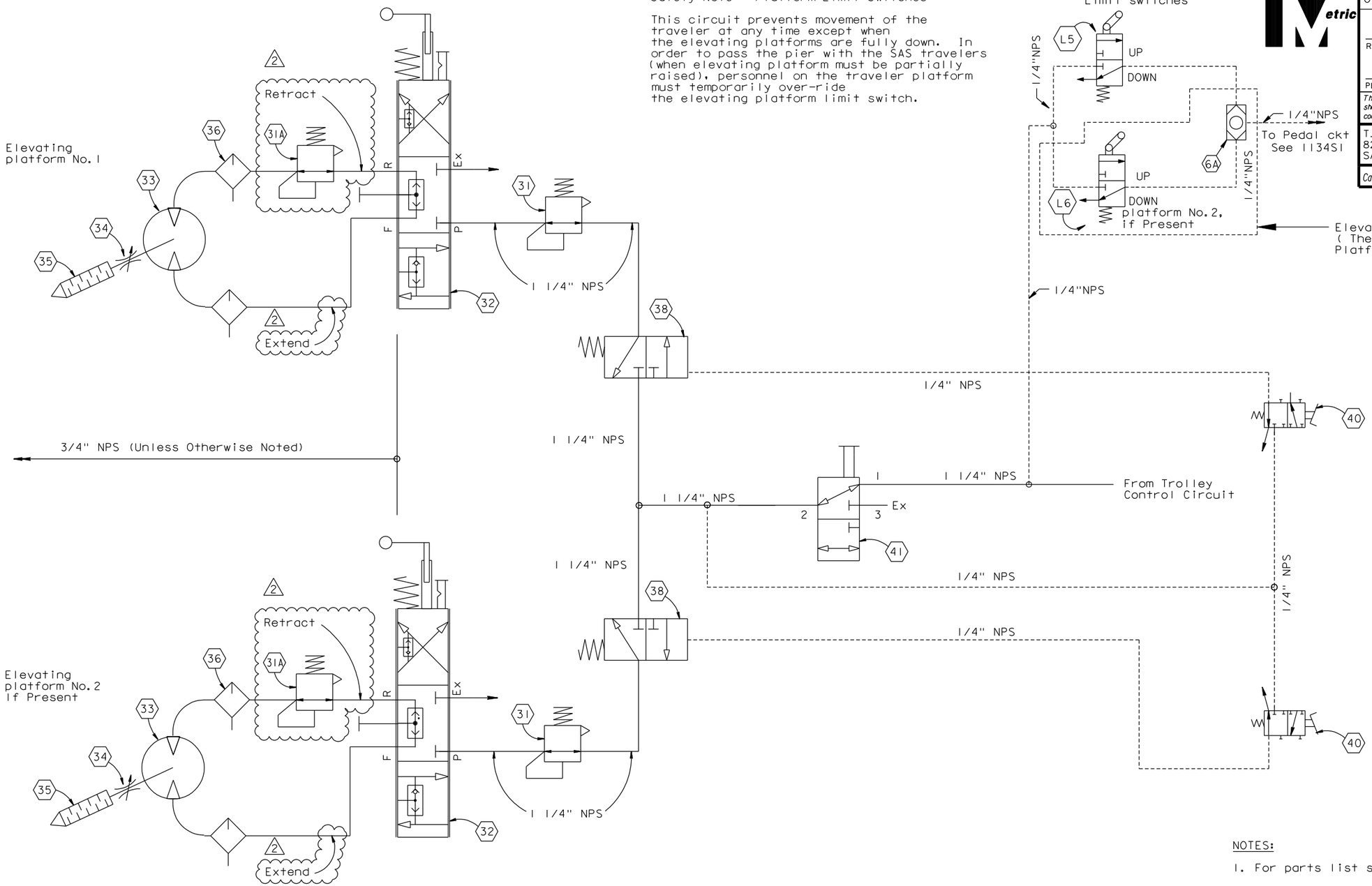

NOTES:

1. For parts list see "Traveler Air System - 02A" sheet.

ELEVATING PLATFORM PNEUMATIC SCHEMATIC

NTS

CONTRACT CHANGE ORDER NO. _____
SHEET ____ OF ____

REQUESTS FOR INFORMATION NOT ADDRESSED IN THIS CCO REMAIN IN FORCE

MARK	DATE	DESCRIPTIONS	BY	CH'D	CCO#
2	02/25/11	TRAVELER MODIFICATIONS	RH	TH	183
1	02/12/10	TRAVELER MODIFICATIONS	RH	TH	24S1
0	08/21/09	TRAVELER MODIFICATIONS	RH	TH	24S1

REVISIONS

R. Valizadeh/V. Toan/Y.L./W.L./F.C.
DESIGN OVERSIGHT
SIGN OFF DATE 02/25/11

	BY	CHECKED
DESIGN	R. Scott	R. Henriksen
DETAILS	Z. Istre	J. Otter
QUANTITIES	R. Scott	T. Ho

PREPARED FOR THE STATE OF CALIFORNIA DEPARTMENT OF TRANSPORTATION

ALL DIMENSIONS ARE IN MILLIMETERS UNLESS OTHERWISE SHOWN

R. Manzanarez
PROJECT ENGINEER

BRIDGE NO. 34-0006L/R
KILOMETER POST 13.2/13.9

SAN FRANCISCO OAKLAND BAY BRIDGE
EAST SPAN SEISMIC SAFETY PROJECT
SELF-ANCHORED SUSPENSION BRIDGE
(SUPERSTRUCTURE & TOWER)

TRAVELER AIR SYSTEM-02B

Rev. Date: 5-18-98

ORIGINAL SCALE IN MILLIMETERS FOR REDUCED PLANS 0 10 20 30 40 50 60 70 80 90 100

CU 04
EA 0120F1

DISREGARD PRINTS BEARING EARLIER REVISION DATES 06/19/09

REVISION DATES (PRELIMINARY STAGE ONLY)

SHEET 718S1R2 OF

FILE => I:\bb\04-012001\sas\contract plans and cco\cco\cco#183\4-revision 02-25-11\dgn\aktrvl21b.dgn

100 % PS&E

USERNAME => DWinrow DATE PLOTTED => 25 FEB 2011 TIME PLOTTED => 11:52:38

DIST.	COUNTY	ROUTE	KILOMETER POST TOTAL PROJECT	SHEET NO.	TOTAL SHEETS
04	SF	80	13.2/13.9	1136R1	1204

Caltrans Metric

REGISTERED ENGINEER - MECHANICAL

12-6-04
PLANS APPROVAL DATE

REGISTERED PROFESSIONAL ENGINEER Roupen Donikian No. M 20235 Exp. 09/30/06 MECHANICAL STATE OF CALIFORNIA

The State of California or its officers or agents shall not be responsible for the accuracy or completeness of electronic copies of this plan sheet.

T.Y. LIN / MOFFATT & NICHOL
825 BATTERY STREET
SAN FRANCISCO, CA 94111

Caltrans now has a web site! To get to the web site, go to: http://www.dot.ca.gov

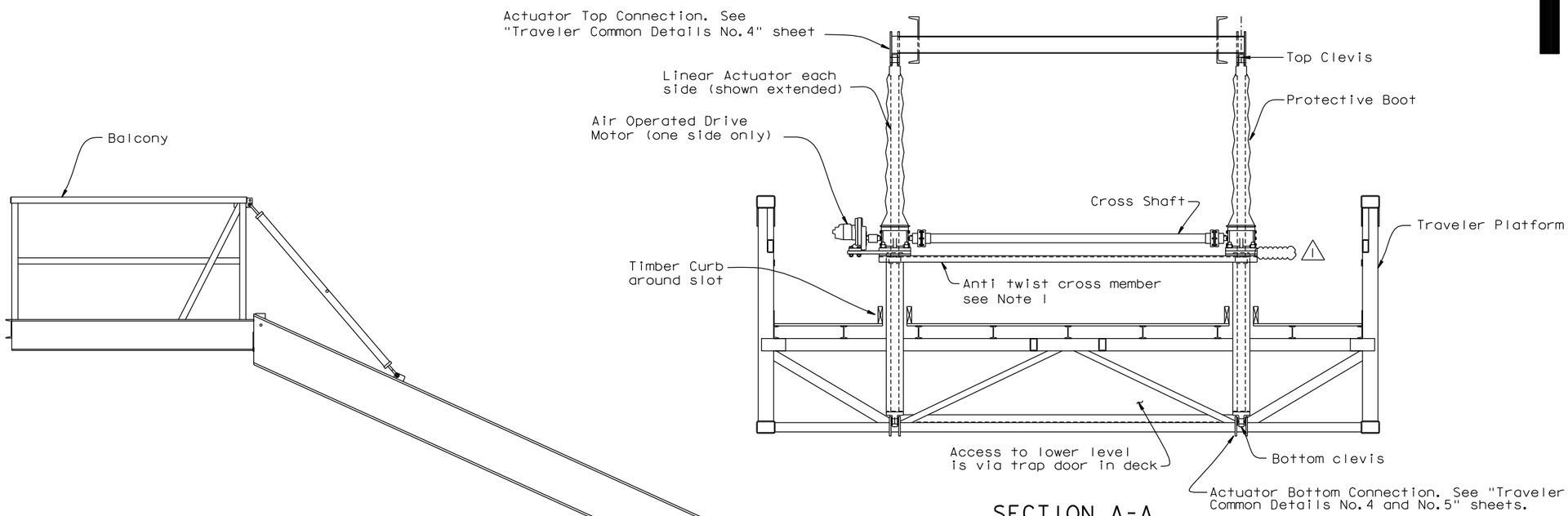

SECTION A-A
1:20

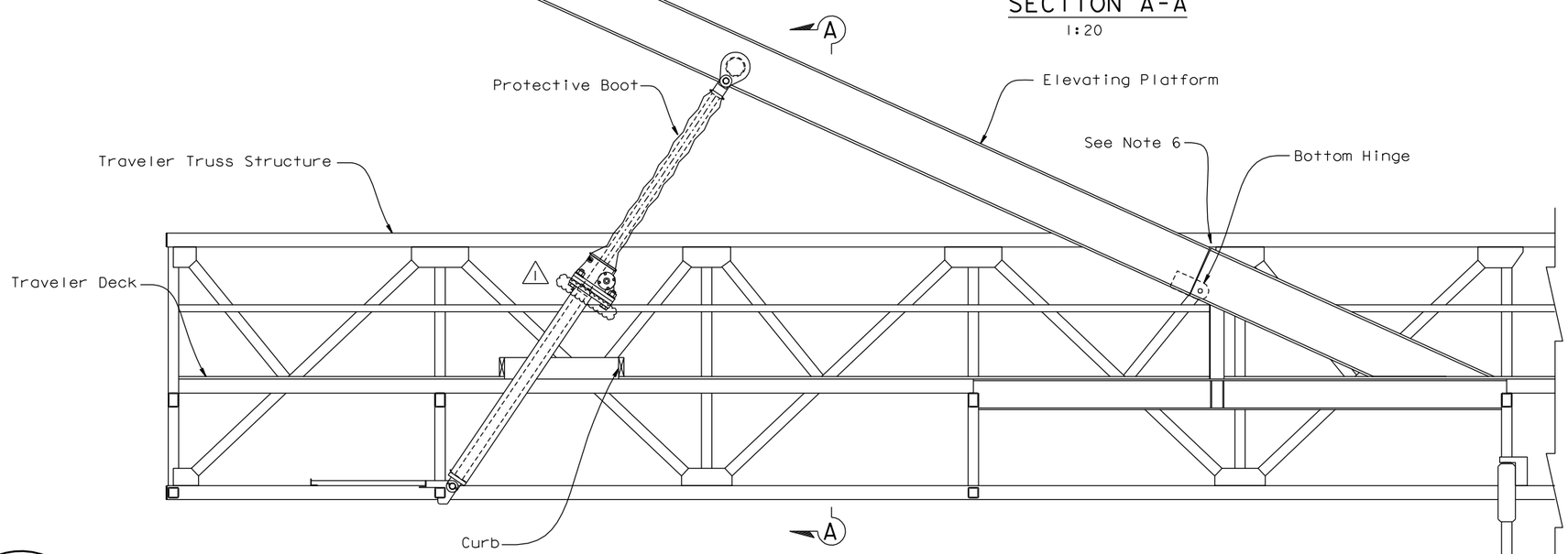

LINEAR ACTUATOR ASSEMBLY (SHOWN ON THE SAS EB TRAVELER)
1:20

NOTES:

1. The anti-twist cross member with M30 Actuator is C 150x16. With M50 Actuator it is C 230x20.
2. For Actuator notes, see "Linear Actuators And Drives - 02" sheet.
3. For Actuator details, see Linear Actuators And Drives - 03" sheet.
4. For Actuator drives, see "Linear Actuators And Drives - 04" sheet.
5. Fabricator to verify all actuator lengths, actuator attachment positions, actuator travel requirements etc.
6. Actuator lengths & travels to be such that actuator reaches full extension & is arrested before the gap at the hinge closes tight.

REGISTERED PROFESSIONAL ENGINEER James P. Duxbury No. C 64677 Exp. 06/30/11 CIVIL STATE OF CALIFORNIA

FOR REVISIONS ONLY

CONTRACT CHANGE ORDER NO. ____
SHEET ___ OF ___

REQUESTS FOR INFORMATION NOT ADDRESSED IN THIS CCO REMAIN IN FORCE

ALL DIMENSIONS ARE IN MILLIMETERS UNLESS OTHERWISE SHOWN

R. Valizadeh/V. Toan/Y.L./W.L./F.C.
DESIGN OVERSIGHT
SIGN OFF DATE 02/25/11

MARK	DATE	DESCRIPTIONS	BY	CH'D	CCO#
1	02/25/11	TRAVELER MODIFICATIONS	AS	JD	183

REVISIONS

	BY	CHECKED
DESIGN	J. Otter	R. Donikian
DETAILS	J. Otter	R. Donikian
QUANTITIES	J. Otter	M. Roberts

PREPARED FOR THE STATE OF CALIFORNIA DEPARTMENT OF TRANSPORTATION

R. Manzanarez
PROJECT ENGINEER

BRIDGE NO. 34-0006L/R
KILOMETER POST 13.2/13.9

SAN FRANCISCO OAKLAND BAY BRIDGE
EAST SPAN SEISMIC SAFETY PROJECT
SELF-ANCHORED SUSPENSION BRIDGE
(SUPERSTRUCTURE & TOWER)

LINEAR ACTUATORS AND DRIVES-01

Rev. Date: 5-18-98

ORIGINAL SCALE IN MILLIMETERS FOR REDUCED PLANS 0 10 20 30 40 50 60 70 80 90 100

CU 04
EA 0120F1

DISREGARD PRINTS BEARING EARLIER REVISION DATES → 04/15/02 01/04/02 12/19/02

SHEET 719R1 OF

FILE => I:\bb\04-012001\sas\contract plans and cco\cco\cco#183\4-revision 02-25-11\dgn\aktrv122.dgn

USERNAME => DWinrow DATE PLOTTED => 25 FEB 2011 TIME PLOTTED => 11:55:09

100% PS&E

DIST.	COUNTY	ROUTE	KILOMETER POST TOTAL PROJECT	SHEET NO.	TOTAL SHEETS
04	SF	80	13.2/13.9	1137R1	1204

Caltrans Metric

REGISTERED ENGINEER - MECHANICAL

12-6-04
PLANS APPROVAL DATE

REGISTERED PROFESSIONAL ENGINEER Roupen Donikian No. M 20235 Exp. 09/30/06 MECHANICAL STATE OF CALIFORNIA

The State of California or its officers or agents shall not be responsible for the accuracy or completeness of electronic copies of this plan sheet.

T.Y. LIN / MOFFATT & NICHOL
825 BATTERY STREET
SAN FRANCISCO, CA 94111

Caltrans now has a web site! To get to the web site, go to: http://www.dot.ca.gov

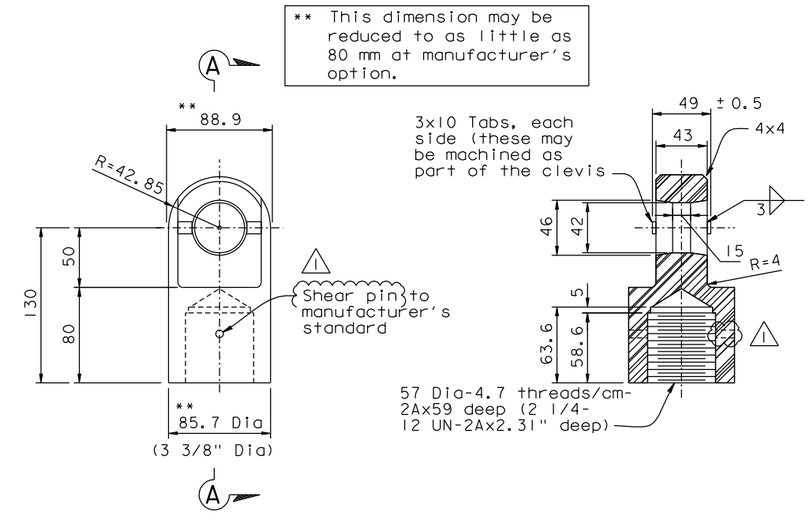

ELEVATION SECTION A-A

TOP CLEVIS

1:2.5

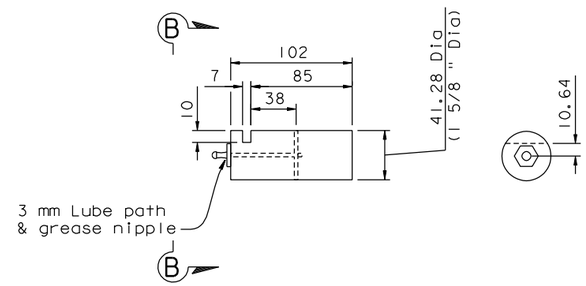

ELEVATION SECTION B-B

ACTUATOR PIN

1:2.5

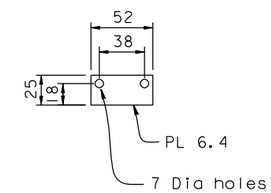

PIN RETENTION PLATE

1:2.5

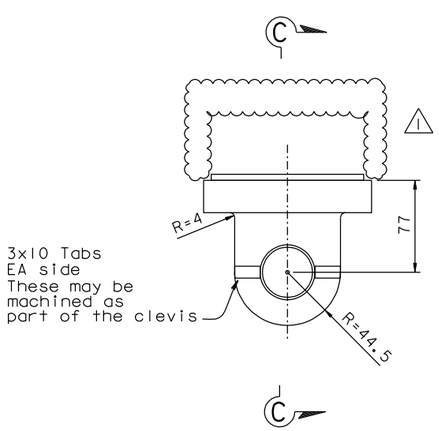

ELEVATION

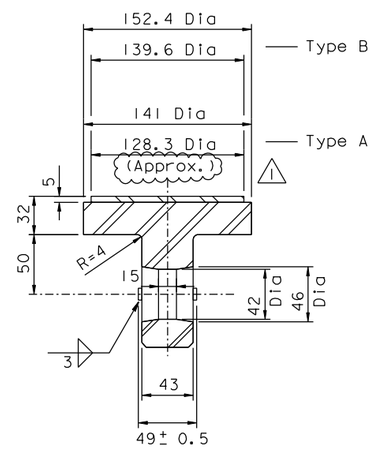

SECTION C-C

BOTTOM CLEVIS

1:2.5

LINEAR ACTUATOR NOTES:

1. Load screw to bottom out at bottom clevis to prevent excessive retraction.
2. Stop nut to contact stop plate to prevent excessive extension and to prevent the hinge from closing tight.
3. Lifted Loads given are service loads.
4. Min Structural Factor of Safety required = 5.0 on all loads.
   Min Mechanical Factor of Safety required = 6.0 on all loads.
5. Materials:
   - Load Screw - Steel stock to Manufacturer's standards.
   - Pipe - Mechanical tube, Min Fy=300 MPa
   - Bottom clevis, Top clevis, Shaft retention plate Min Fy=285 MPa
   - Pin - ASTM A572 Grade 50.
   - Welding Electrodes - to be appropriate to the material used. Manufacturer to propose specific materials for each element.
   - Boots to be Neoprene coated nylon with Vulca Seal process complete with air breathers as supplied by Unilift or approved equivalent.
   - Bolts - SAE Grade 8.
6. All exterior surfaces of static steel elements to be provided with Marine grade epoxy coating as per specifications.
7. All bolts, load screws, worm shafts & protruding shafts to be electroless (Nickel-Tungsten -Boron) plated to a thickness of 0.001 inch
8. For purposes of completing the design of ancillary elements, the actuators selected are Unilift Models M30 and M50 screw jack actuators as manufactured by Templeton, Kenly & Co. Inc. Alternative actuators of equivalent performance and quality are permitted. Closed length and travel are not to be altered. Radious of gyration of the load screw is not to be reduced.
9. Threads on load screws to be Stub Acme pattern with a pitch of 0.6 threads per cm (1.5 threads per inch). Do not increase depth of thread cut.
10. Note that the drive motors have limited torque capability and will stall out before the service load capacity of the unit is reached.
11. For drive motors and mounts see "Linear Actuators And Drives - 04" sheet.
12. Manufacturer is to set up the stop nuts in paired actuators (ie. the two actuators on a single elevating platform) such that they will contact & stop travel within 1 mm of each other.
13. Actuators to be fabricated to the tolerance shown.

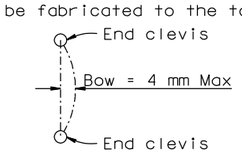

REGISTERED PROFESSIONAL ENGINEER James P.Duxbury No. C 64677 Exp. 06/30/11 CIVIL STATE OF CALIFORNIA

FOR REVISIONS ONLY

CONTRACT CHANGE ORDER NO. ____
SHEET ___ OF ___

REQUESTS FOR INFORMATION NOT ADDRESSED IN THIS CCO REMAIN IN FORCE

ALL DIMENSIONS ARE IN MILLIMETERS UNLESS OTHERWISE SHOWN

R. Valizadeh/V. Toan/Y.L./W.L./F.C.
DESIGN OVERSIGHT
Reza Valizadeh / Vong Toan / Y. Liu
SIGN OFF DATE 02/25/11

MARK	DATE	DESCRIPTIONS	BY	CH'D	CCO#
1	02/25/11	TRAVELER MODIFICATIONS	AS	JD	183

REVISIONS

	BY	CHECKED
DESIGN	J. Otter	R. Donikian
DETAILS	J. Otter	R. Donikian
QUANTITIES	J. Otter	M. Roberts

PREPARED FOR THE STATE OF CALIFORNIA DEPARTMENT OF TRANSPORTATION

R. Manzanarez
PROJECT ENGINEER

BRIDGE NO. 34-0006L/R
KILOMETER POST 13.2/13.9

SAN FRANCISCO OAKLAND BAY BRIDGE
EAST SPAN SEISMIC SAFETY PROJECT
SELF-ANCHORED SUSPENSION BRIDGE
(SUPERSTRUCTURE & TOWER)

LINEAR ACTUATORS AND DRIVES-02

Rev. Date: 5-18-98

ORIGINAL SCALE IN MILLIMETERS FOR REDUCED PLANS 0 10 20 30 40 50 60 70 80 90 100

CU 04
EA 0120F1

DISREGARD PRINTS BEARING EARLIER REVISION DATES

REVISION DATES (PRELIMINARY STAGE ONLY) 04/08/02 01/01/02 12/19/02

SHEET 720R1 OF

FILE => I:\bb\04-012001\sas\contract plans and cco\cco\cco#183\4-revision 02-25-11\dgn\aktrv123.dgn

USERNAME => DWinrow DATE PLOTTED => 25 FEB 2011 TIME PLOTTED => 11:55:48

DIST.	COUNTY	ROUTE	KILOMETER POST TOTAL PROJECT	SHEET NO.	TOTAL SHEETS
04	SF	80	13.2/13.9	1138R1	1204

Caltrans Metric

REGISTERED ENGINEER - MECHANICAL

12-6-04
PLANS APPROVAL DATE

REGISTERED PROFESSIONAL ENGINEER Roupen Donikian No. M 20235 Exp. 09/30/06 MECHANICAL STATE OF CALIFORNIA

The State of California or its officers or agents shall not be responsible for the accuracy or completeness of electronic copies of this plan sheet.

T.Y. LIN / MOFFATT & NICHOL
825 BATTERY STREET
SAN FRANCISCO, CA 94111

Caltrans now has a web site! To get to the web site, go to: http://www.dot.ca.gov

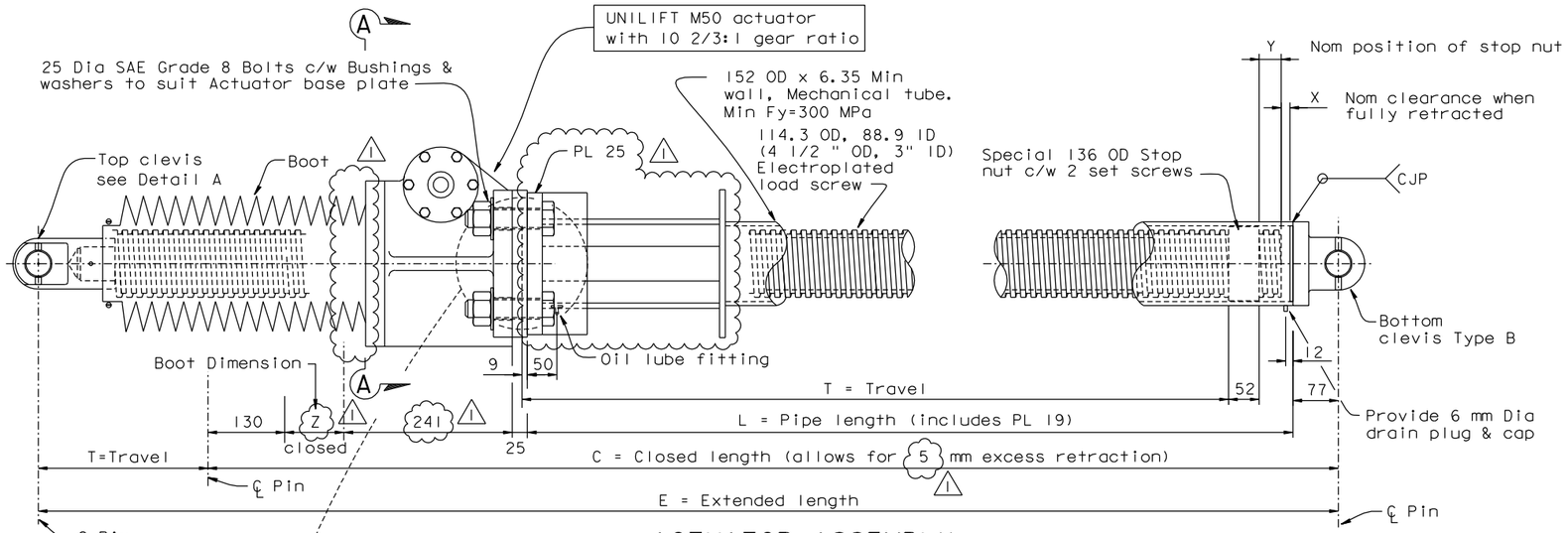

ACTUATOR ASSEMBLY
ACT - 04, - 05 & - 06

Using UNILIFT M50 actuator with 10 2/3:1 gear ratio

1:5

Location	Actuator Type	T	C	E	L	X	Y	Z	Lifted loads kN DL	Lifted loads kN LL	Nom lift speed mm/min
SAS-EB	ACT-01 (M30)	1397.5	2182	3581	1610	0	164.5	130	20	24	630
SAS-WB	ACT-02 (M30)	1323	2112	3432	1540	0	169	130	20	24	630
E2/E3-EB N	ACT-04 (M50)	1722	2563	4267	1935	0	157	155	25	30	400
E2/E3-EB S	ACT-05 (M50)	1642	2397	4020	1769	0	71	155	25	30	400
E2/E3-WB N	ACT-06 (M50)	1756	2826	4583	2198	0	394	155	25	30	400
E2/E3-WB S	ACT-03 (M50)	1471	2307	3773	1679	0	160	155	20	24	630

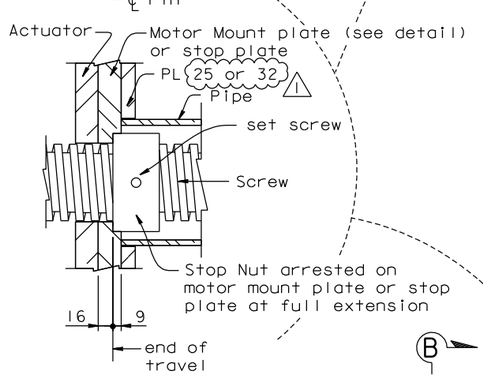

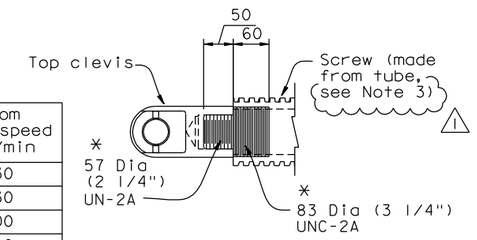

* Machine fron 102 Dia round Fy=285 Min

DETAIL A
1:5

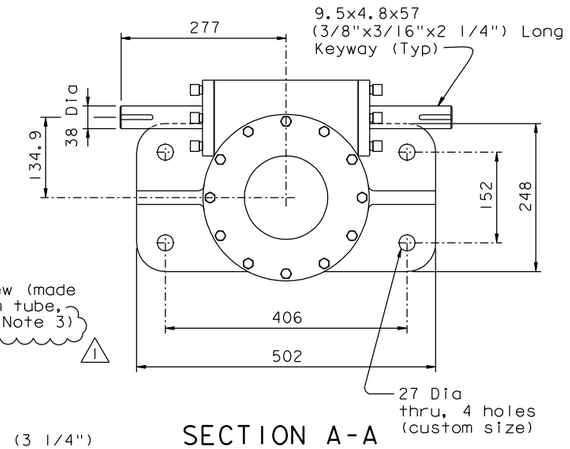

SECTION A-A
1:5

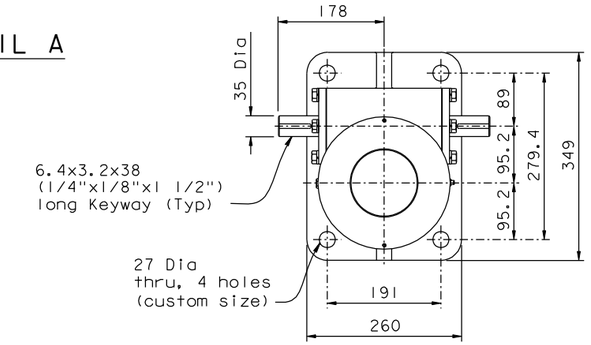

SECTION B-B
1:5

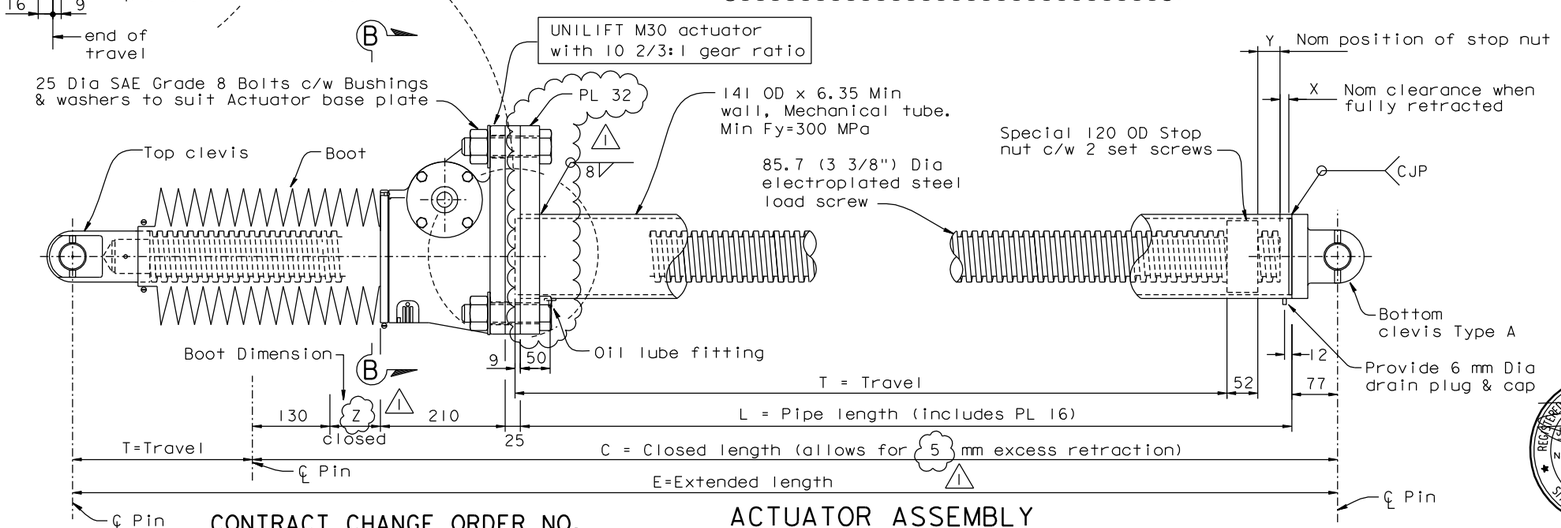

CONTRACT CHANGE ORDER NO. _____
SHEET ____ OF ____

REQUESTS FOR INFORMATION NOT ADDRESSED IN THIS CCO REMAIN IN FORCE

ACTUATOR ASSEMBLY
ACT - 01, - 02 & - 03

Using UNILIFT M30 actuator with 10 2/3:1 gear ratio

1:5

REGISTERED PROFESSIONAL ENGINEER James P.Duxbury No. C 64677 Exp. 06/30/11 CIVIL STATE OF CALIFORNIA

FOR REVISIONS ONLY

ALL DIMENSIONS ARE IN MILLIMETERS UNLESS OTHERWISE SHOWN

NOTES:

1. Manufacturer may supply sleeves & washer plates in lieu of custom hole sizes.
2. For details not shown, see "Linear Actuators And Drives -01,-02 & -04" sheets.
3. Manufacturer may supply solid screw in lieu of tube.

MARK	DATE	DESCRIPTIONS	BY	CH'D	CCO#
1	02/25/11	TRAVELER MODIFICATIONS	AS	JD	183

REVISIONS

R. Valizadeh/V. Toan/Y.L./W.L./F.C.
DESIGN OVERSIGHT
Roya Valizadeh / Vong Toan / Y. Liu
SIGN OFF DATE 02/25/11

DESIGN BY J. Otter CHECKED R. Donikian
DETAILS BY J. Otter CHECKED R. Donikian
QUANTITIES BY J. Otter CHECKED M. Roberts

PREPARED FOR THE STATE OF CALIFORNIA DEPARTMENT OF TRANSPORTATION

R. Manzanarez
PROJECT ENGINEER

BRIDGE NO. 34-0006L/R
KILOMETER POST 13.2/13.9

SAN FRANCISCO OAKLAND BAY BRIDGE
EAST SPAN SEISMIC SAFETY PROJECT
SELF-ANCHORED SUSPENSION BRIDGE
(SUPERSTRUCTURE & TOWER)

LINEAR ACTUATORS AND DRIVES-03

Rev. Date: 5-18-98

ORIGINAL SCALE IN MILLIMETERS FOR REDUCED PLANS 0 10 20 30 40 50 60 70 80 90 100

CU 04
EA 0120F1

DISREGARD PRINTS BEARING EARLIER REVISION DATES 04/18/02 01/04/02 12/19/02

SHEET 721R1 OF

FILE => I:\bb\04-01200\sas\contract plans and cco\cco\cco#183\4-revision 02-25-11\dgn\aktrvl24.dgn

USERNAME => DWinrow DATE PLOTTED => 25 FEB 2011 TIME PLOTTED => 11:57:51

100 % PS&E

DIST.	COUNTY	ROUTE	KILOMETER POST TOTAL PROJECT	SHEET NO.	TOTAL SHEETS
04	SF	80	13.2/13.9	1139R1	1204

Caltrans Metric

REGISTERED ENGINEER - MECHANICAL

12-6-04
PLANS APPROVAL DATE

REGISTERED PROFESSIONAL ENGINEER Roupen Donikian No. M 20235 Exp. 09/30/06 MECHANICAL STATE OF CALIFORNIA

The State of California or its officers or agents shall not be responsible for the accuracy or completeness of electronic copies of this plan sheet.

T.Y. LIN / MOFFATT & NICHOL
825 BATTERY STREET
SAN FRANCISCO, CA 94111

Caltrans now has a web site! To get to the web site, go to: http://www.dot.ca.gov

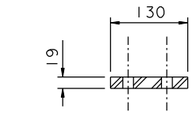

SECTION A-A

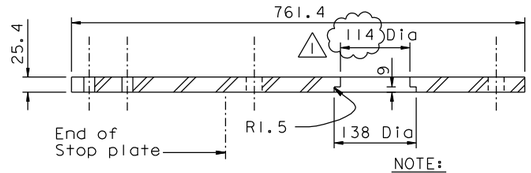

SECTION B-B

NOTE:
Adjust plate & bolt dimensions to suit actual Actuators & Drive motors chosen.

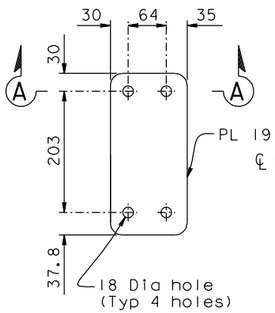

PLAN

SHIM PLATE

1:5

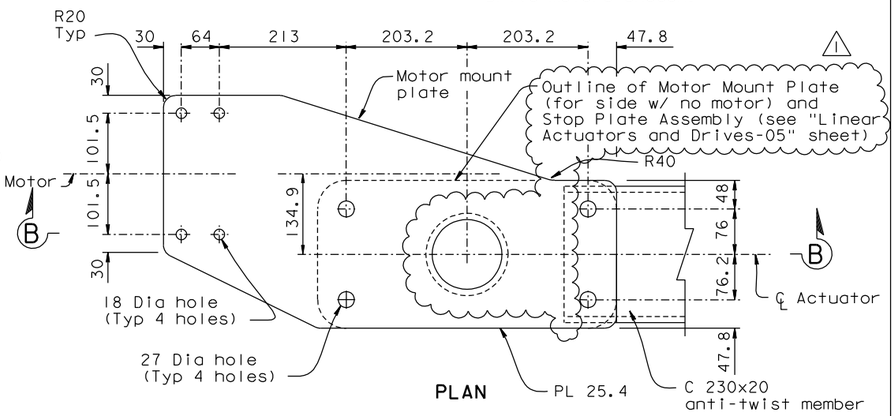

PLAN

MOTOR MOUNT & STOP PLATE

1:5

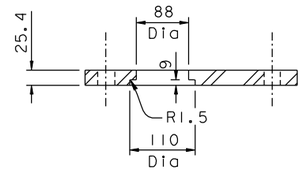

SECTION C-C

NOTE:
Adjust plate & bolt hole dimensions to suit actual Actuators & Drive Motors chosen.

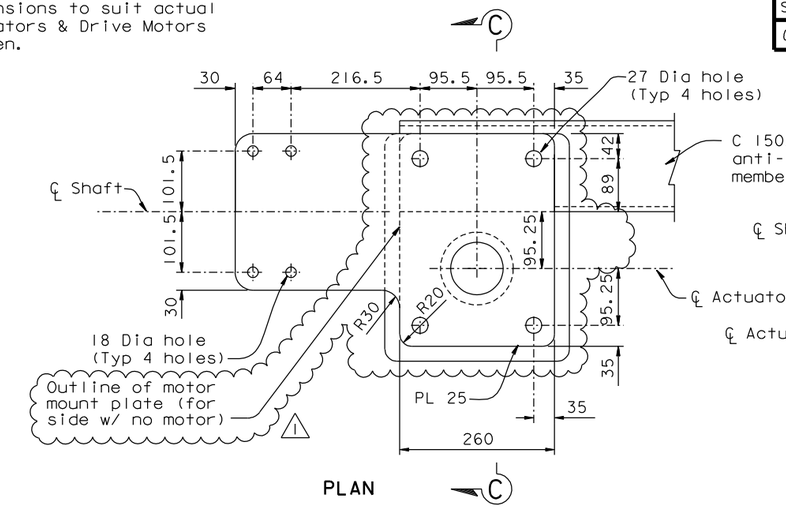

PLAN

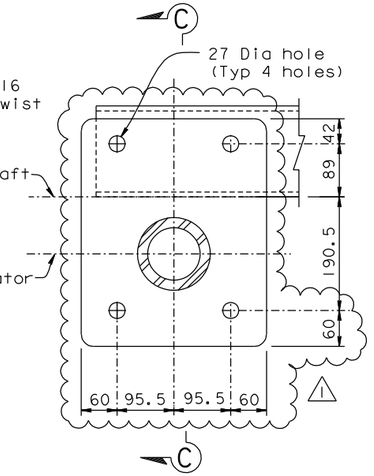

STOP PLATE

1:5

MOTOR MOUNT PLATE

1:5

Flexible jaw coupling
Max angular offset - 1 degree
Max parallel offset - 0.4 mm
Torque rating 300 N-m
Lovejoy L150 or equivalent

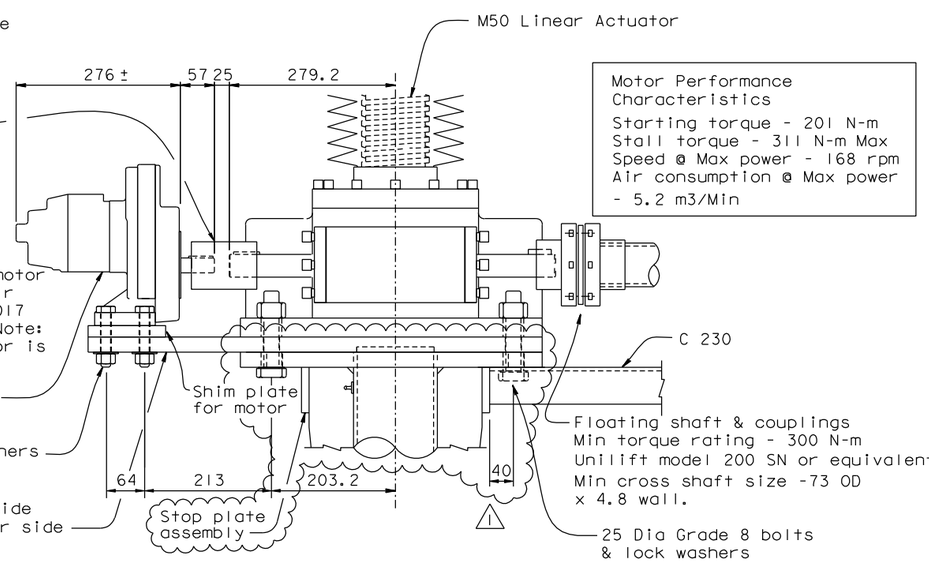

Motor Performance Characteristics
Starting torque - 201 N-m
Stall torque - 311 N-m Max
Speed @ Max power - 168 rpm
Air consumption @ Max power - 5.2 m3/Min

ACTUATOR DRIVE FOR M50 ACTUATOR

1:5

Flexible jaw coupling
Max angular offset - 1 degree
Max parallel offset - 0.4 mm
Torque rating 200 N-m
Lovejoy L110 or equivalent

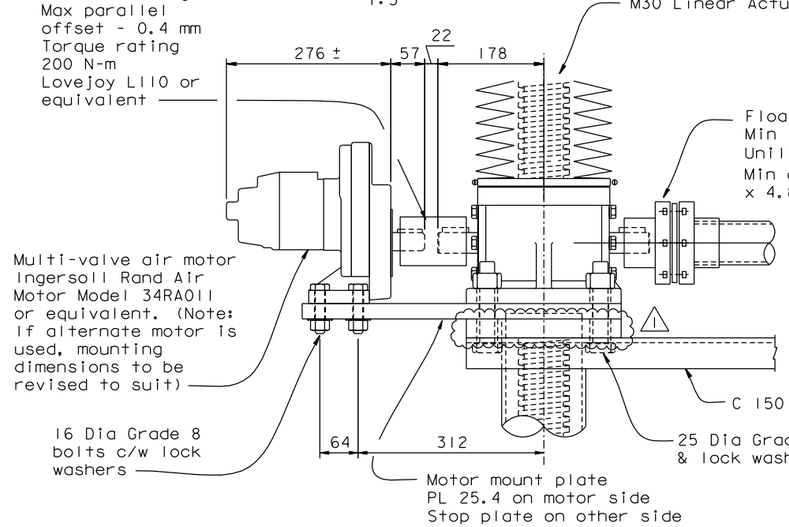

Motor Performance Characteristics
Starting torque - 133 N-m
Stall torque - 206 N-m Max
Speed @ Max power - 255 rpm
Air consumption @ Max power - 5.2 m3/Min

ACTUATOR DRIVE FOR M30 ACTUATOR

1:5

ALL DIMENSIONS ARE IN MILLIMETERS UNLESS OTHERWISE SHOWN

REGISTERED PROFESSIONAL ENGINEER James P. Duxbury No. C 64677 Exp. 06/30/11 CIVIL STATE OF CALIFORNIA

FOR REVISIONS ONLY

CONTRACT CHANGE ORDER NO. _____
SHEET ____ OF ____

REQUESTS FOR INFORMATION NOT ADDRESSED IN THIS CCO REMAIN IN FORCE

R. Valizadeh/V. Toan/Y.L./W.L./F.C.
DESIGN OVERSIGHT
SIGN OFF DATE 02/25/11

MARK	DATE	DESCRIPTIONS	BY	CH'D	CCO#
1	02/25/11	TRAVELER MODIFICATIONS	AS	JD	183

REVISIONS

	BY	CHECKED
DESIGN	J. Otter	R. Donikian
DETAILS	J. Otter	R. Donikian
QUANTITIES	J. Otter	M. Roberts

PREPARED FOR THE STATE OF CALIFORNIA DEPARTMENT OF TRANSPORTATION

R. Manzanarez
PROJECT ENGINEER

BRIDGE NO. 34-0006L/R
KILOMETER POST 13.2/13.9

SAN FRANCISCO OAKLAND BAY BRIDGE
EAST SPAN SEISMIC SAFETY PROJECT
SELF-ANCHORED SUSPENSION BRIDGE
(SUPERSTRUCTURE & TOWER)

LINEAR ACTUATORS AND DRIVES-04

Rev. Date: 5-18-98

ORIGINAL SCALE IN MILLIMETERS FOR REDUCED PLANS 0 10 20 30 40 50 60 70 80 90 100

CU 04
EA 0120F1

DISREGARD PRINTS BEARING EARLIER REVISION DATES

REVISION DATES (PRELIMINARY STAGE ONLY) 04/15/02 07/09/02 12/19/02

SHEET 722R1 OF

FILE => I:\bb\04-012001\sas\contract plans and cco\cco\cco#183\4-revision 02-25-11\dgn\aktrv125.dgn

100 % PS&E

USERNAME => DWinrow DATE PLOTTED => 25 FEB 2011 TIME PLOTTED => 12:07:02

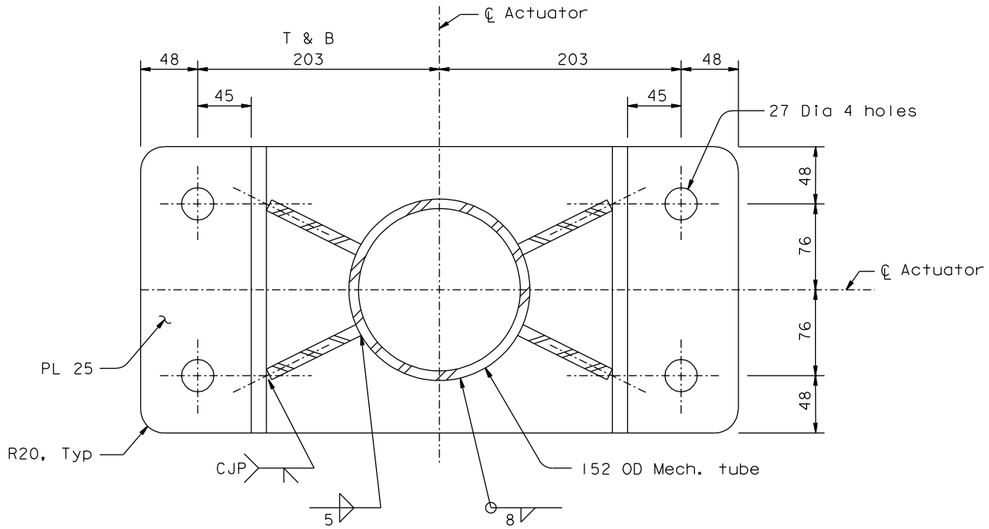

SECTION A-A

1:2.5

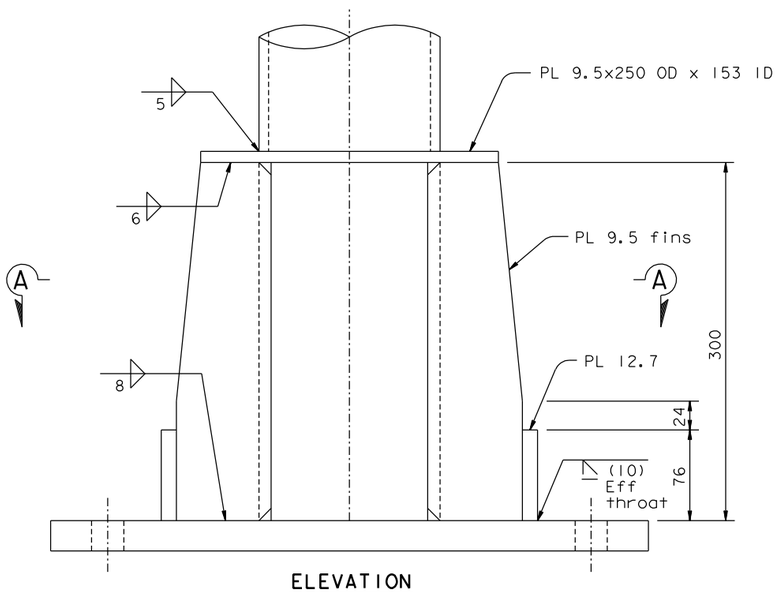

ELEVATION

STOP PLATE ASSEMBLY
@ M50 ACTUATORS

1:2.5

CONTRACT CHANGE ORDER NO. _____
SHEET ____ OF ____

REQUESTS FOR INFORMATION NOT ADDRESSED IN THIS CCO REMAIN IN FORCE

ALL DIMENSIONS ARE IN MILLIMETERS UNLESS OTHERWISE SHOWN

DIST.	COUNTY	ROUTE	KILOMETER POST TOTAL PROJECT	SHEET NO.	TOTAL SHEETS
04	SF	80	13.2/13.9	1139S1	1204

REGISTERED ENGINEER - CIVIL

02-25-11
PLANS APPROVAL DATE

REGISTERED PROFESSIONAL ENGINEER James P.Duxbury No. C 64677 Exp. 06/30/11 CIVIL STATE OF CALIFORNIA

The State of California or its officers or agents shall not be responsible for the accuracy or completeness of electronic copies of this plan sheet.

T.Y. LIN / MOFFATT & NICHOL
825 BATTERY STREET
SAN FRANCISCO, CA 94111

Caltrans now has a web site! To get to the web site, go to: http://www.dot.ca.gov

Caltrans Metric

R. Valizadeh/V. Toan/Y.L./W.L./F.C.
DESIGN OVERSIGHT
Ryan Valizadeh / Vong Toan / Y. Liu
SIGN OFF DATE 02/25/11

MARK	DATE	DESCRIPTIONS	BY	CH'D	CCO#
0	02/25/11	TRAVELER MODIFICATIONS	AS	JD	183

REVISIONS

	BY		CHECKED
DESIGN	A. Sanjines		J. Duxbury
DETAILS	A. Sanjines		J. Duxbury
QUANTITIES	A. Sanjines		J. Duxbury

PREPARED FOR THE STATE OF CALIFORNIA DEPARTMENT OF TRANSPORTATION

R. Manzanarez
PROJECT ENGINEER

BRIDGE NO. 34-0006L/R
KILOMETER POST 13.2/13.9

SAN FRANCISCO OAKLAND BAY BRIDGE
EAST SPAN SEISMIC SAFETY PROJECT
SELF-ANCHORED SUSPENSION BRIDGE
(SUPERSTRUCTURE & TOWER)

LINEAR ACTUATORS AND DRIVES-05

Rev. Date: 5-18-98

ORIGINAL SCALE IN MILLIMETERS FOR REDUCED PLANS 0 10 20 30 40 50 60 70 80 90 100

CU 04
EA 0120F1

DISREGARD PRINTS BEARING EARLIER REVISION DATES 02/25/11

REVISION DATES (PRELIMINARY STAGE ONLY)

SHEET 722S1 OF

100 % PS&E

USERNAME => DWinrow DATE PLOTTED => 25 FEB 2011 TIME PLOTTED => 12:04:53

FILE => I:\bb\04-012001\sas\contract plans and cco\cco\cco#183\4-revision 02-25-11\dgn\aktrv124a.dgn