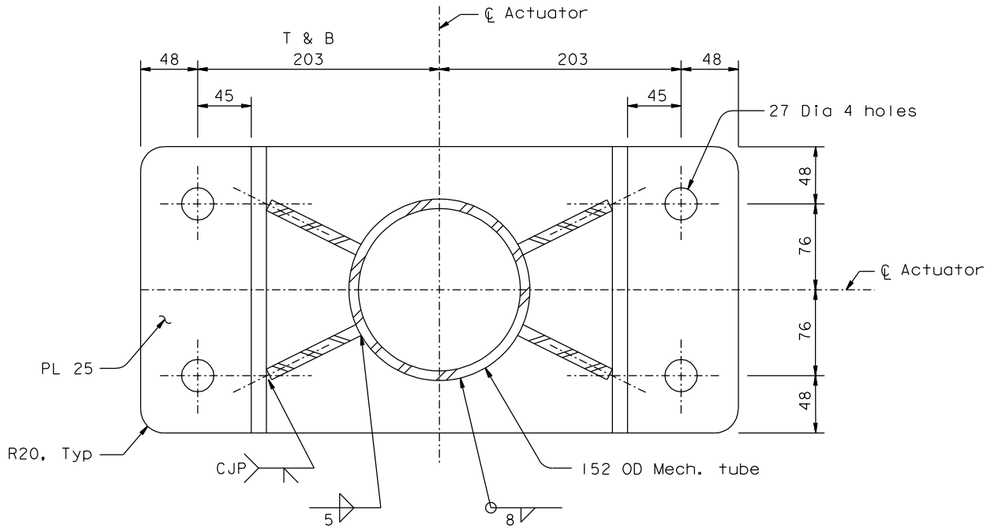


SECTION A-A

1:2.5

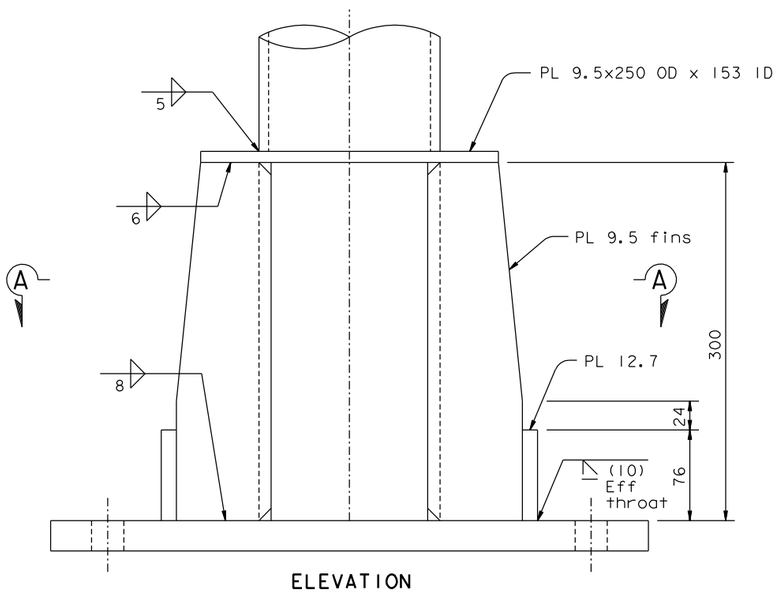


ELEVATION

STOP PLATE ASSEMBLY
@ M50 ACTUATORS

1:2.5

CONTRACT CHANGE ORDER NO. _____
SHEET ____ OF ____

REQUESTS FOR INFORMATION NOT ADDRESSED IN THIS CCO REMAIN IN FORCE

ALL DIMENSIONS ARE IN MILLIMETERS UNLESS OTHERWISE SHOWN

| DIST. | COUNTY | ROUTE | KILOMETER POST TOTAL PROJECT | SHEET NO. | TOTAL SHEETS |
|---|---|---|---|---|---|
| 04 | SF | 80 | 13.2/13.9 | 1139S1 | 1204 |

REGISTERED ENGINEER - CIVIL

02-25-11
PLANS APPROVAL DATE

REGISTERED PROFESSIONAL ENGINEER James P.Duxbury No. C 64677 Exp. 06/30/11 CIVIL STATE OF CALIFORNIA

The State of California or its officers or agents shall not be responsible for the accuracy or completeness of electronic copies of this plan sheet.

T.Y. LIN / MOFFATT & NICHOL
825 BATTERY STREET
SAN FRANCISCO, CA 94111

Caltrans now has a web site! To get to the web site, go to: http://www.dot.ca.gov

Caltrans Metric

R. Valizadeh/V. Toan/Y.L./W.L./F.C.
DESIGN OVERSIGHT
Ryan Valizadeh / Vong Toan / Y. Liu
SIGN OFF DATE 02/25/11

| MARK | DATE | DESCRIPTIONS | BY | CH'D | CCO# |
|---|---|---|---|---|---|
| 0 | 02/25/11 | TRAVELER MODIFICATIONS | AS | JD | 183 |

REVISIONS

| | BY | | CHECKED |
|---|---|---|---|
| DESIGN | A. Sanjines | | J. Duxbury |
| DETAILS | A. Sanjines | | J. Duxbury |
| QUANTITIES | A. Sanjines | | J. Duxbury |

PREPARED FOR THE STATE OF CALIFORNIA DEPARTMENT OF TRANSPORTATION

R. Manzanarez
PROJECT ENGINEER

BRIDGE NO. 34-0006L/R
KILOMETER POST 13.2/13.9

SAN FRANCISCO OAKLAND BAY BRIDGE
EAST SPAN SEISMIC SAFETY PROJECT
SELF-ANCHORED SUSPENSION BRIDGE
(SUPERSTRUCTURE & TOWER)

# LINEAR ACTUATORS AND DRIVES-05

Rev. Date: 5-18-98

ORIGINAL SCALE IN MILLIMETERS FOR REDUCED PLANS 0 10 20 30 40 50 60 70 80 90 100

CU 04
EA 0120F1

DISREGARD PRINTS BEARING EARLIER REVISION DATES 02/25/11

REVISION DATES (PRELIMINARY STAGE ONLY)

SHEET 722S1 OF

100 % PS&E

USERNAME => DWinrow DATE PLOTTED => 25 FEB 2011 TIME PLOTTED => 12:04:53

FILE => I:\bb\04-012001\sas\contract plans and cco\cco\cco#183\4-revision 02-25-11\dgn\aktrv124a.dgn