DIST.	COUNTY	ROUTE	KILOMETER POST TOTAL PROJECT	SHEET NO.	TOTAL SHEETS
04	SF	80	13.2/13.9	1160R3	1204

REGISTERED ENGINEER - MECHANICAL

12-6-04

PLANS APPROVAL DATE

The State of California or its officers or agents shall not be responsible for the accuracy or completeness of electronic copies of this plan sheet.

REGISTERED PROFESSIONAL ENGINEER Roupen Donikian No. C 56519 Exp. 06/30/09 CIVIL STATE OF CALIFORNIA

T.Y. LIN / MOFFATT & NICHOL
825 BATTERY STREET
SAN FRANCISCO, CA 94111

Caltrans now has a web site! To get to the web site, go to: http://www.dot.ca.gov

Caltrans Metric

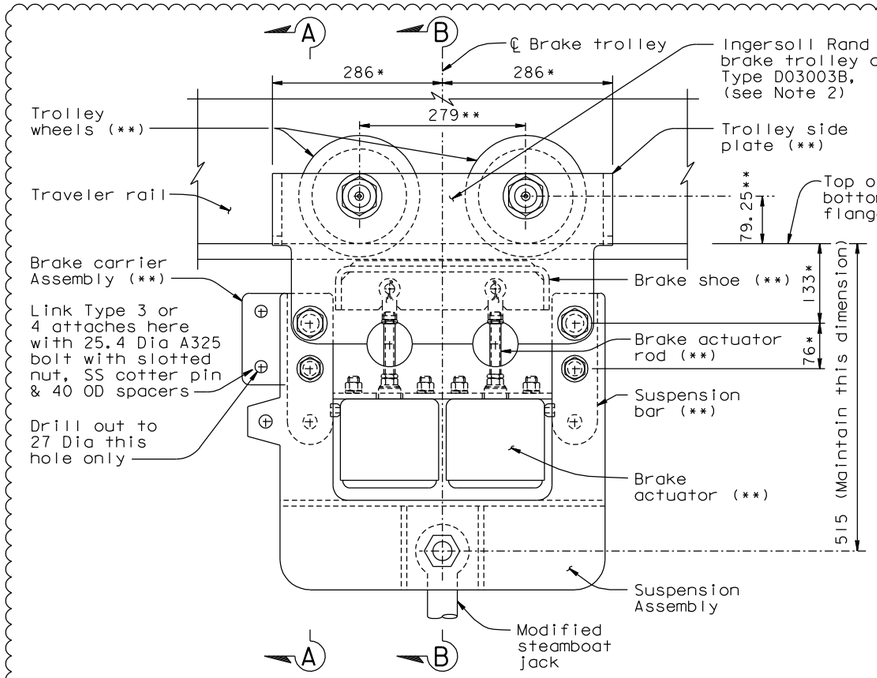

BRAKE TROLLEY ELEVATION (4 Required)

1:5 *See Note 3 **See Note 4

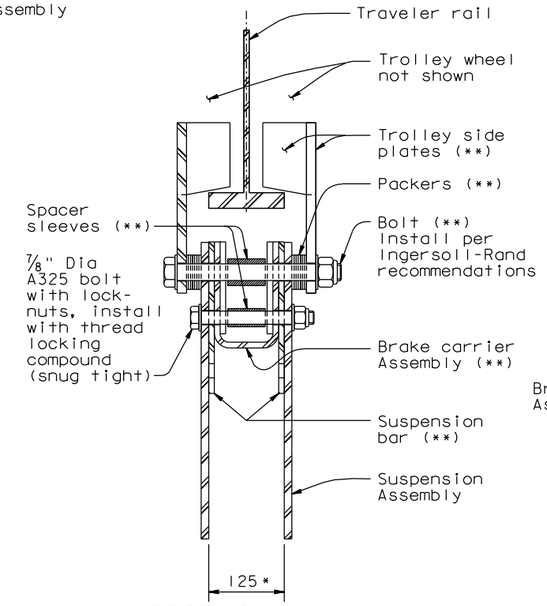

SECTION A-A

1:5 *See Note 3 **See Note 4

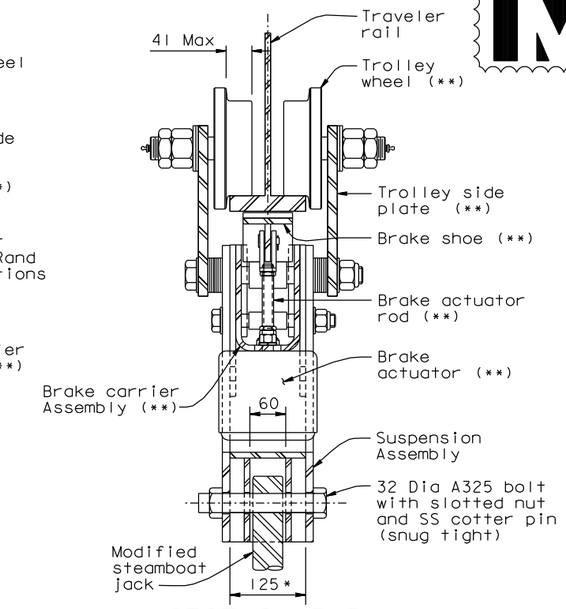

SECTION B-B

1:5 *See Note 3 **See Note 4

3

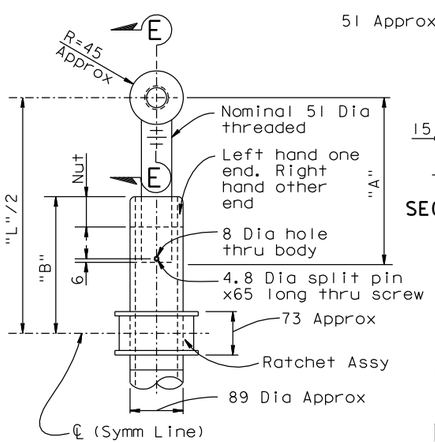

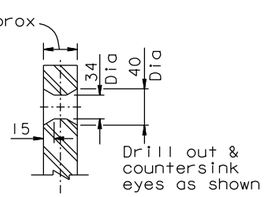

SECTION E-E

Type	No. Required	"A"	"B"	Length "L" Extended	Length "L" Retracted	Stroke
1	4	359	305	920 Min	760	160

Fabricate these jacks from Simplex ER 20, 20 Ton capacity steamboat jacks or equal.

MODIFIED STEAMBOAT JACKS

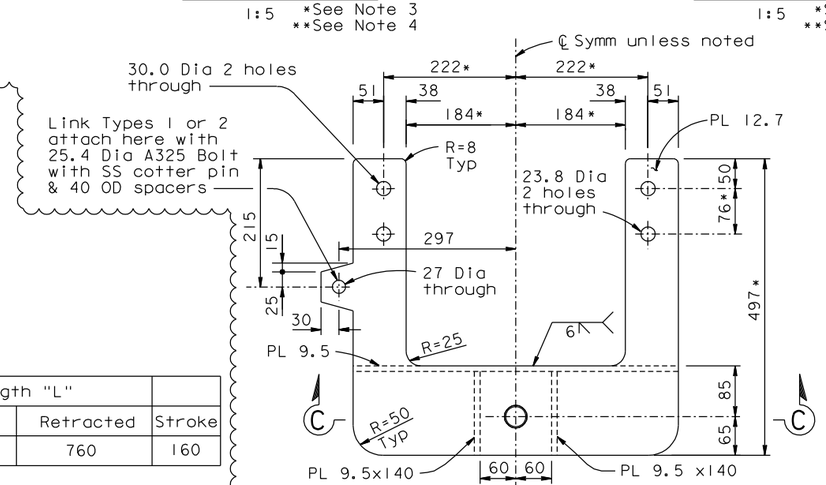

ELEVATION

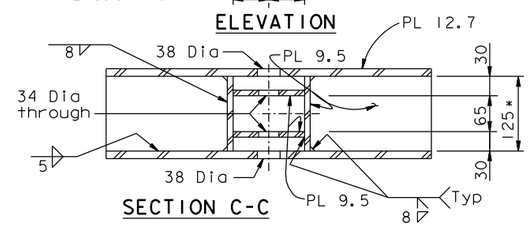

SECTION C-C

SUSPENSION ASSEMBLY

1:5 *See Note 3

ALL DIMENSIONS ARE IN MILLIMETERS UNLESS OTHERWISE SHOWN

NOTES:

1. The brake trolley assembly is designed to use Ingersoll-Rand proprietary brake trolley unit Type D03003B as the basis for this element, with added components for attachment of suspension etc. 3
2. Characteristics of the Ingersoll-Rand D03003B 3 trolleys shall be as follows:
   a. Suitable for use on 127 mm flange width
   b. Utility Load rating (at 5:1 Factor of Safety)=6000kg. per trolley.
   c. Brake to be air-release/spring-set type.
   d. Horizontal holding power of brake when "on" to be min. 275 kg per trolley.
   e. Wheels to be flat tread type. Max tread width=41 mm.
3. Dimensions indicated thus,*, are to be verified by the fabricator by measurement of the actual brake trolleys. Should actual dimensions differ from those shown, the fabricator shall adapt the dimensions shown to suit the actual dimensions. Fabricator is to advise the Engineerof all adaptations made & dimensions measured.
4. Components indicated thus, **, are sub-assembly components of the proprietary brake trolleys and are supplied as part of the brake trolleys. They are called out on this drawing for clarity for explanation.
5. Quantities given are per traveler.

REGISTERED PROFESSIONAL ENGINEER Tien Hung Ho No. C 43990 Exp. 06/30/13 CIVIL STATE OF CALIFORNIA

FOR REVISION 2 ONLY

REVISION 2 SUPERSEDES REVISION 1

CONTRACT CHANGE ORDER NO. _____
SHEET ____ OF ____

REQUESTS FOR INFORMATION NOT ADDRESSED IN THIS CCO REMAIN IN FORCE

MARK	DATE	DESCRIPTIONS	BY	CH'D	CCO#
3	08/23/11	MISCELLANEOUS TRAVELER MODIFICATIONS	TH	AS	183
2	06/19/09	TRAVELER MODIFICATIONS	TH	AS	24S1
1	07/20/07	RAIL CHANGE & MISCELLANEOUS DETAILS	RD	NV	24

REVISIONS

R. Valizadeh/V. Toan/Y.L./W.L./F.C.
DESIGN OVERSIGHT
Ryan Valizadeh / Vong Toan / Y. Liu
SIGN OFF DATE 08/23/11

	BY	CHECKED
DESIGN	J. Otter	R. Donikian
DETAILS	J. Otter	R. Donikian
QUANTITIES	J. Otter	M. Roberts

PREPARED FOR THE STATE OF CALIFORNIA DEPARTMENT OF TRANSPORTATION

R. Manzanarez
PROJECT ENGINEER

BRIDGE NO. 34-0006L/R
KILOMETER POST 13.2/13.9

SAN FRANCISCO OAKLAND BAY BRIDGE
EAST SPAN SEISMIC SAFETY PROJECT
SELF-ANCHORED SUSPENSION BRIDGE
(SUPERSTRUCTURE & TOWER)

E2/E3 BIKEPATH TRAVELER MECHANICAL-02

Rev. Date: 5-18-98

ORIGINAL SCALE IN MILLIMETERS FOR REDUCED PLANS 0 10 20 30 40 50 60 70 80 90 100

CU 04
EA 0120F1

DISREGARD PRINTS BEARING EARLIER REVISION DATES

REVISION DATES (PRELIMINARY STAGE ONLY) 04/15/02 07/01/02 12/19/02

SHEET 743R3 OF

FILE => I:\bb\04-012001\sas\contract plans and cco\cco\cco#183\7-revision 08-23-11\dgn\aktrv141.dgn

USERNAME => DWinrow DATE PLOTTED => 23 AUG 2011 TIME PLOTTED => 13:55:00

100 % PS&E