DIST.	COUNTY	ROUTE	KILOMETER POST TOTAL PROJECT	SHEET NO.	TOTAL SHEETS
04	SF	80	13.2/13.9	1083S2	1204

REGISTERED ENGINEER - CIVIL

09-23-11
PLANS APPROVAL DATE

REGISTERED PROFESSIONAL ENGINEER Tien Hung Ho No. C 43990 Exp. 06/30/13 CIVIL STATE OF CALIFORNIA

The State of California or its officers or agents shall not be responsible for the accuracy or completeness of electronic copies of this plan sheet.

T.Y. LIN / MOFFATT & NICHOL
825 BATTERY STREET
SAN FRANCISCO, CA 94111

Caltrans now has a web site! To get to the web site, go to: http://www.dot.ca.gov

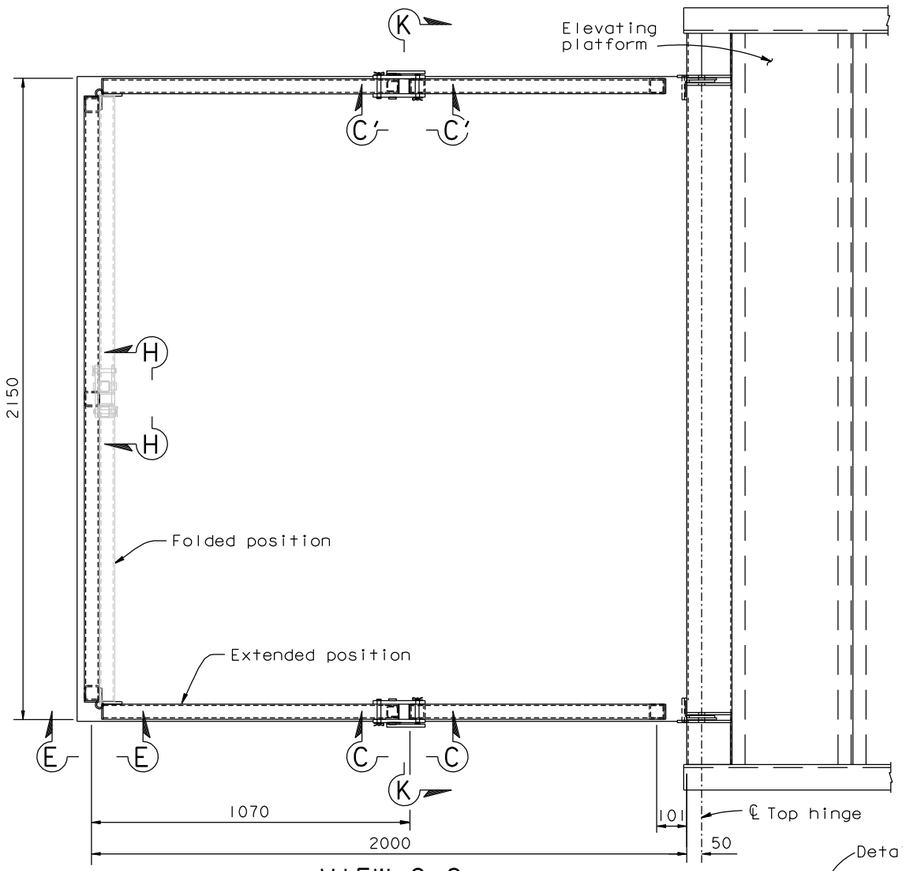

VIEW G-G
1:10

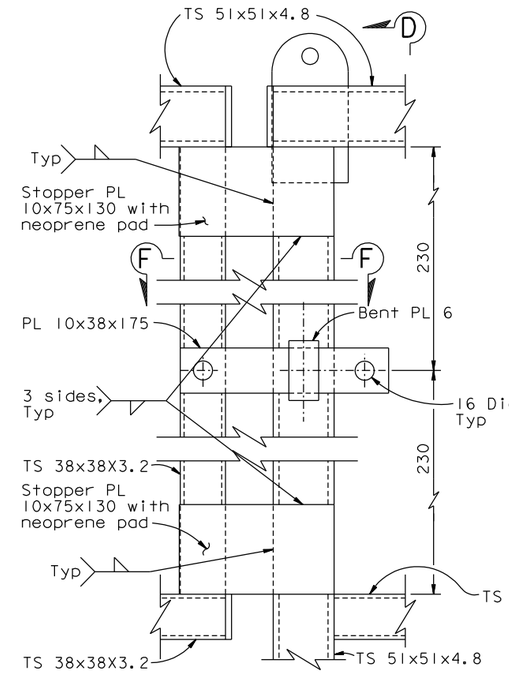

VIEW C-C
1:2.5

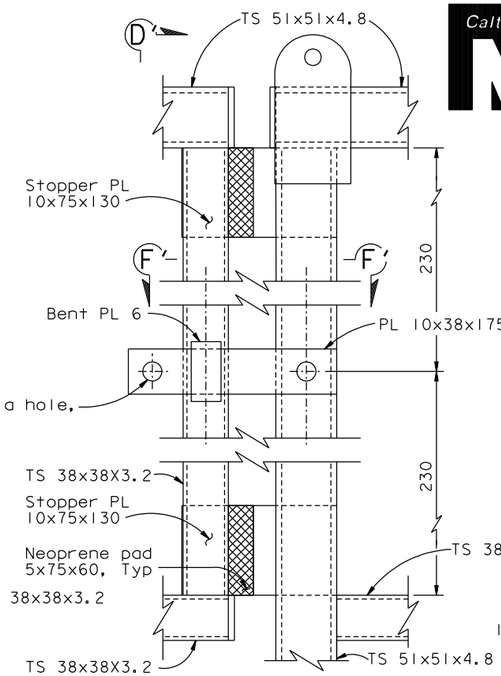

VIEW C'-C'
1:2.5

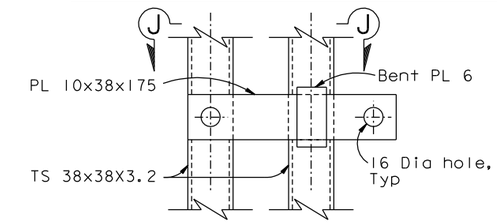

VIEW H-H
1:2.5

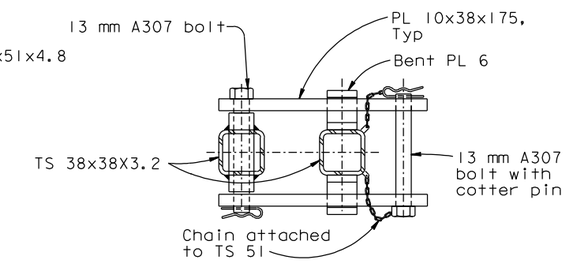

SECTION J-J
1:2.5

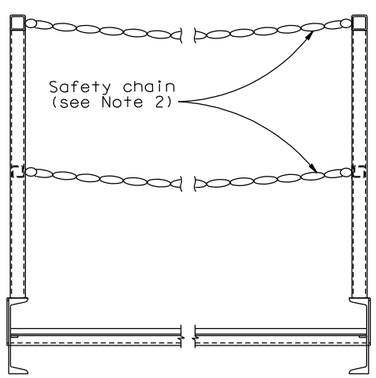

SECTION K-K
1:10

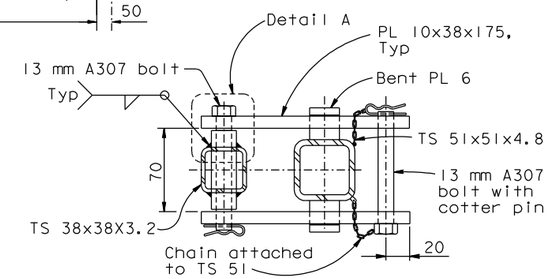

SECTION F-F
1:2.5

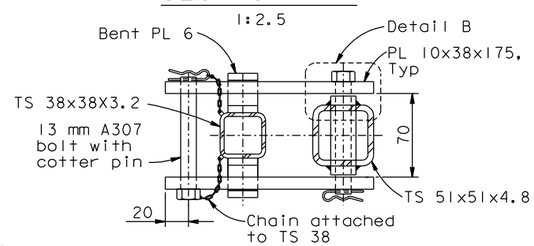

SECTION F'-F'
1:2.5

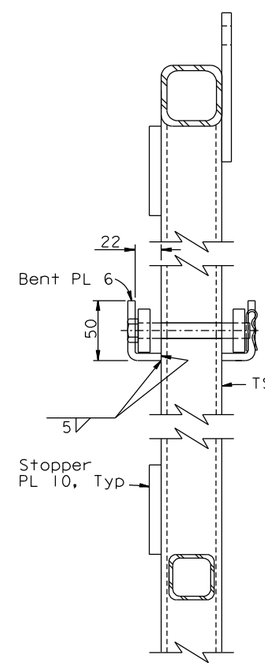

VIEW D-D
1:2.5

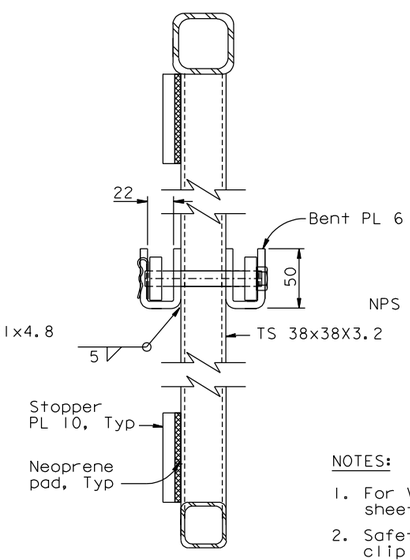

VIEW D'-D'
1:2.5

ALL DIMENSIONS ARE IN MILLIMETERS UNLESS OTHERWISE SHOWN

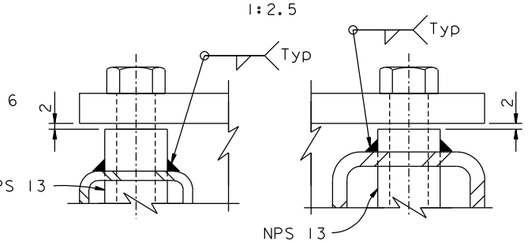

DETAIL A
1:1

DETAIL B
1:1

NOTES:

1. For View E-E, see "Traveler Common Details No.1C" sheet.
2. Safety chain shall be galvanized chain with spring clip end fasteners. Chain and fasteners to be rated at 5 kN (1000 lb) breaking load.

CONTRACT CHANGE ORDER NO. _____
SHEET ____ OF ____

REQUESTS FOR INFORMATION NOT ADDRESSED IN THIS CCO REMAIN IN FORCE

R. Valizadeh/V. Toan/Y.L./W.L./F.C.
DESIGN OVERSIGHT
SIGN OFF DATE 09/23/11

MARK	DATE	DESCRIPTIONS	BY	CH'D	CCO#
0	09/23/11	MISCELLANEOUS TRAVELER MODIFICATONS	TH	JD	183

REVISIONS

DESIGN	BY T. Ho	CHECKED	J. Duxbury
DETAILS	BY A. Baumberger	CHECKED	J. Duxbury
QUANTITIES	BY A. Baumberger	CHECKED	J. Duxbury

PREPARED FOR THE STATE OF CALIFORNIA DEPARTMENT OF TRANSPORTATION

R. Manzanarez
PROJECT ENGINEER

BRIDGE NO. 34-0006L/R
KILOMETER POST 13.2/13.9

SAN FRANCISCO OAKLAND BAY BRIDGE
EAST SPAN SEISMIC SAFETY PROJECT
SELF-ANCHORED SUSPENSION BRIDGE
(SUPERSTRUCTURE & TOWER)

TRAVELER COMMON DETAILS NO. 1B

Rev. Date: 5-18-98

ORIGINAL SCALE IN MILLIMETERS FOR REDUCED PLANS 0 10 20 30 40 50 60 70 80 90 100

CU 04
EA 0120F1

DISREGARD PRINTS BEARING EARLIER REVISION DATES

REVISION DATES (PRELIMINARY STAGE ONLY) 09/23/11

SHEET 666S2 OF

FILE => I:\bb\04-012001\sas\contract plans and cco\cco\cco#183\8-update 09-23-11\dgn\aktrv080b.dgn

USERNAME => DWinrow DATE PLOTTED => 23 SEP 2011 TIME PLOTTED => 13:34:10

100% PS&E