DIST.	COUNTY	ROUTE	KILOMETER POST TOTAL PROJECT	SHEET NO.	TOTAL SHEETS
04	SF	80	13.2/13.9	1083R1	1204

Caltrans Metric

REGISTERED ENGINEER - CIVIL

12-6-04
PLANS APPROVAL DATE

REGISTERED PROFESSIONAL ENGINEER Bashkim Prishtina No. C 053561 Exp. 6/30/07 CIVIL STATE OF CALIFORNIA

The State of California or its officers or agents shall not be responsible for the accuracy or completeness of electronic copies of this plan sheet.

T.Y. LIN / MOFFATT & NICHOL
825 BATTERY STREET
SAN FRANCISCO, CA 94111

Caltrans now has a web site! To get to the web site, go to: http://www.dot.ca.gov

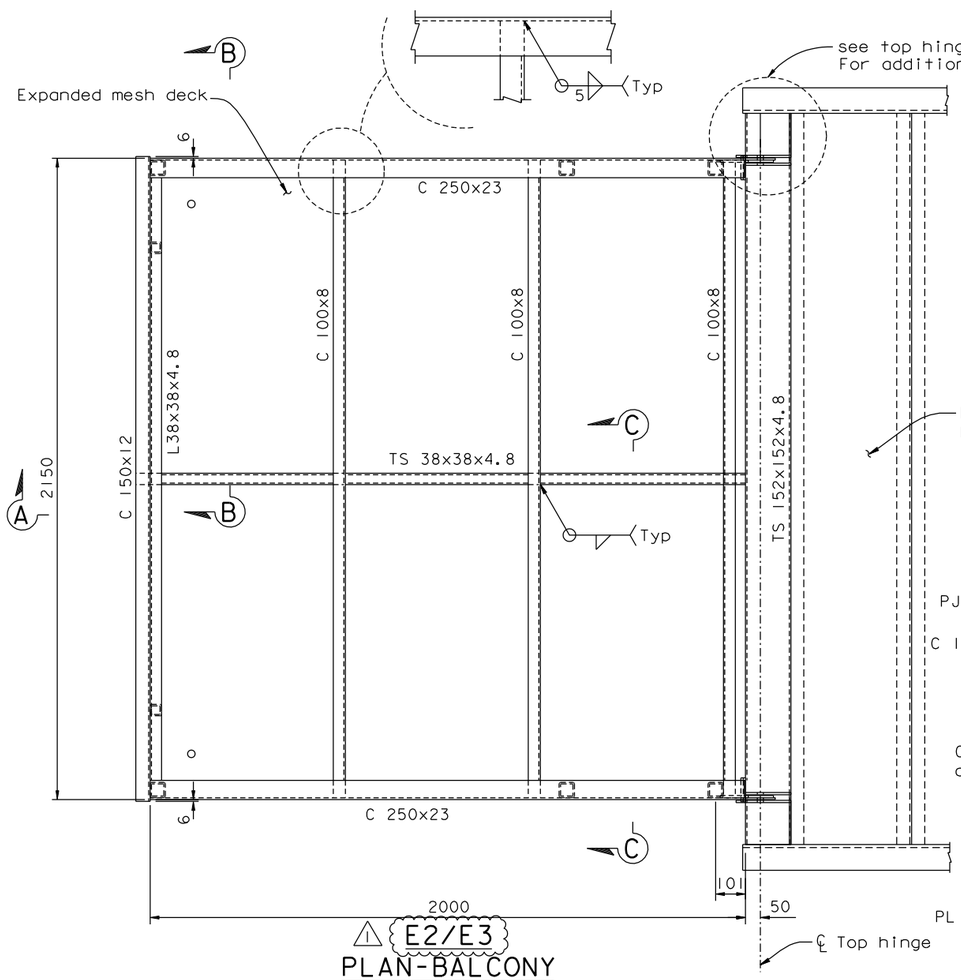

E2/E3
PLAN-BALCONY
1:10

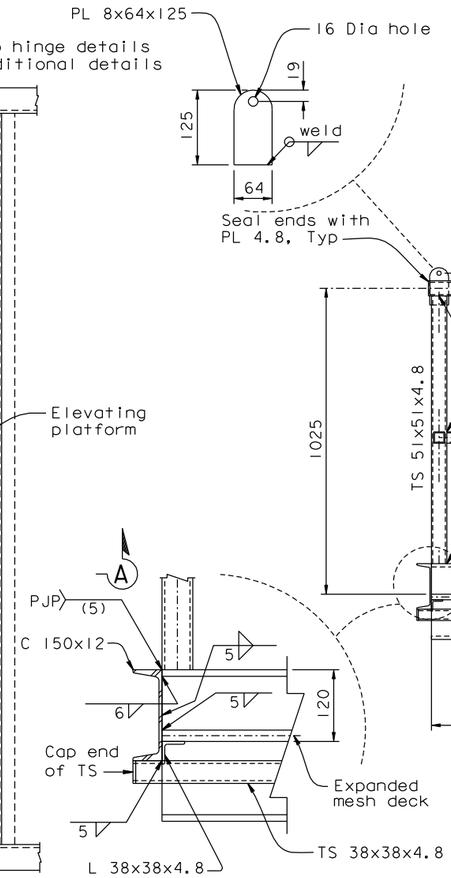

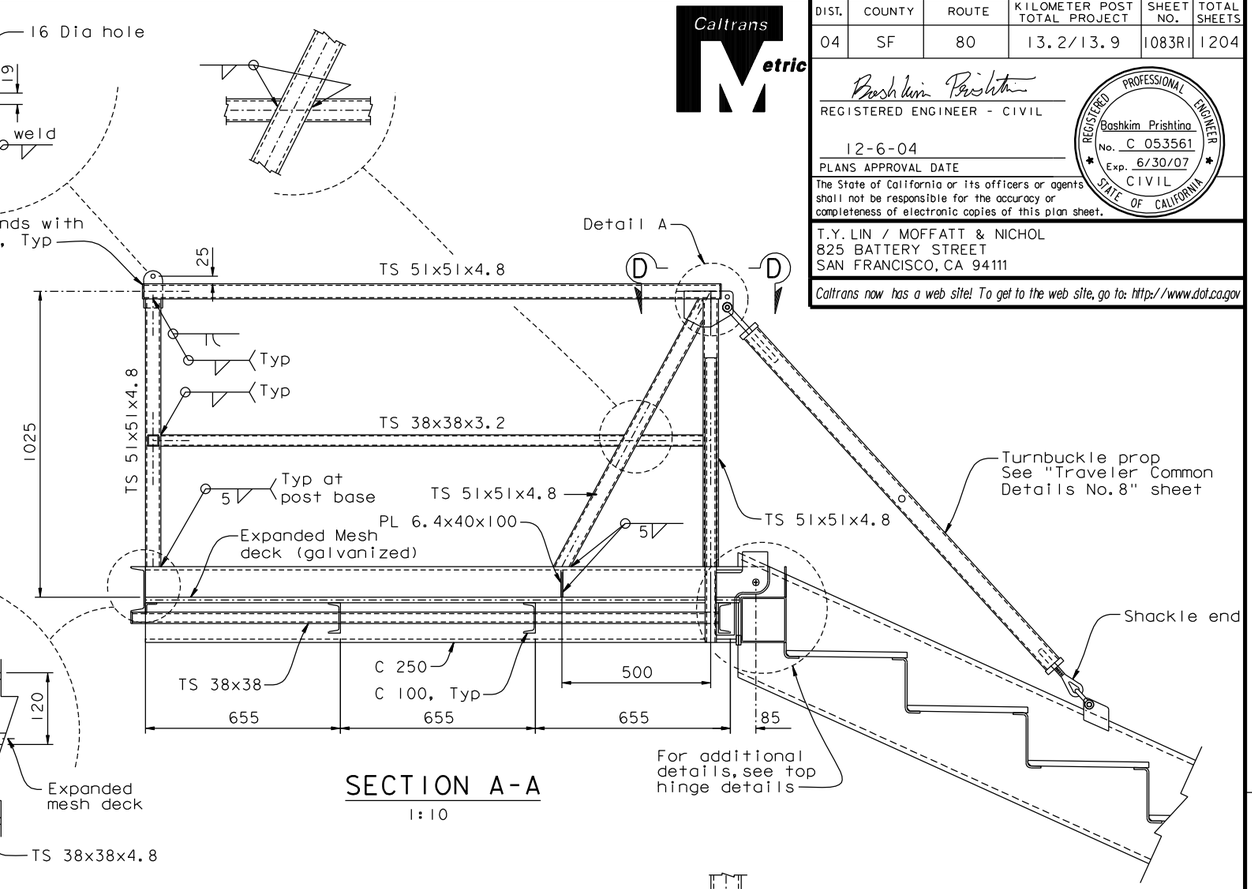

SECTION A-A
1:10

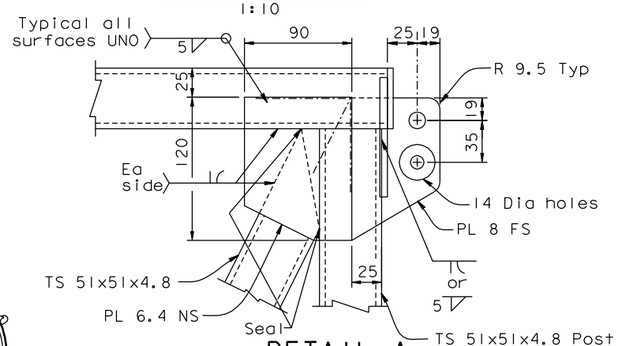

DETAIL A
1:2.5

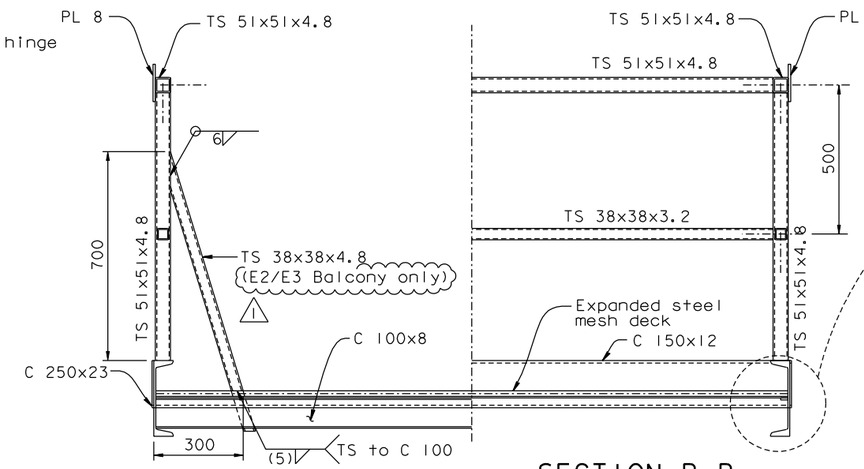

SECTION C-C
1:10

SECTION B-B
1:10

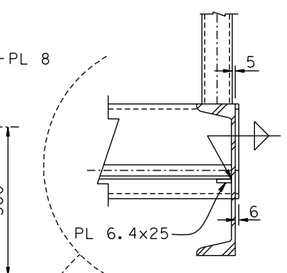

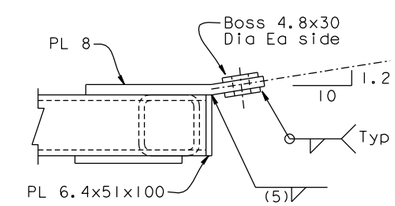

SECTION D-D
1:2.5

NOTES:

1. For top hinge details, see "Traveler Common Details No.2" sheet.
2. Expanded mesh decking is to be galvanized steel expanded mesh 5.0 psf weight, 6.4 mm thickness x 8.4 mm strand having a safe working line load on 650 mm span of 6.5 kN/m (450 plf). Mesh to be trimmed with 25 wide plate welded on top. Fasten to members below with blind rivets @ 300 c/c maximum.

ALL DIMENSIONS ARE IN MILLIMETERS UNLESS OTHERWISE SHOWN

REGISTERED PROFESSIONAL ENGINEER Tien Hung Ho No. C 43990 Exp. 06/30/13 CIVIL STATE OF CALIFORNIA

FOR REVISIONS ONLY

CONTRACT CHANGE ORDER NO. _____
SHEET ___ OF ___

REQUESTS FOR INFORMATION NOT ADDRESSED IN THIS CCO REMAIN IN FORCE

MARK	DATE	DESCRIPTIONS	BY	CH'D	CCO#
1	08/23/11	MISCELLANEOUS TRAVELER MODIFICATONS	TH	MN	183

REVISIONS

R. Valizadeh/V. Toan/Y.L./W.L./F.C.
DESIGN OVERSIGHT
Roya Valizadeh / Vong Toan / Y. Liu
SIGN OFF DATE 08/23/11

	BY	CHECKED
DESIGN	J. Otter	K. Prishtina
DETAILS	J. Otter	M. Roberts
QUANTITIES	J. Otter	M. Roberts

PREPARED FOR THE STATE OF CALIFORNIA DEPARTMENT OF TRANSPORTATION

R. Manzanarez
PROJECT ENGINEER

BRIDGE NO. 34-0006L/R
KILOMETER POST 13.2/13.9

SAN FRANCISCO OAKLAND BAY BRIDGE
EAST SPAN SEISMIC SAFETY PROJECT
SELF-ANCHORED SUSPENSION BRIDGE
(SUPERSTRUCTURE & TOWER)

TRAVELER COMMON DETAILS NO. 1

Rev. Date: 5-18-98

ORIGINAL SCALE IN MILLIMETERS FOR REDUCED PLANS 0 10 20 30 40 50 60 70 80 90 100

CU 04
EA 0120F1

DISREGARD PRINTS BEARING EARLIER REVISION DATES

REVISION DATES (PRELIMINARY STAGE ONLY) 04/18/02 01/10/02 12/19/02

SHEET 666R1 OF

FILE => L:\BB\04-012001\SAS\Contract Plans and CCO\CCO\CCO#183\7-Revision 08-23-11\DGN\aktrv080.dgn

USERNAME => DWinrow DATE PLOTTED => 23 AUG 2011 TIME PLOTTED => 13:39:19

100% PS&E

DIST.	COUNTY	ROUTE	KILOMETER POST TOTAL PROJECT	SHEET NO.	TOTAL SHEETS
04	SF	80	13.2/13.9	1083S1	1204

REGISTERED ENGINEER - CIVIL

08-23-11
PLANS APPROVAL DATE

REGISTERED PROFESSIONAL ENGINEER Tien Hung Ho No. C 43990 Exp. 06/30/13 CIVIL STATE OF CALIFORNIA

The State of California or its officers or agents shall not be responsible for the accuracy or completeness of electronic copies of this plan sheet.

T.Y. LIN / MOFFATT & NICHOL
825 BATTERY STREET
SAN FRANCISCO, CA 94111

Caltrans now has a web site! To get to the web site, go to: http://www.dot.ca.gov

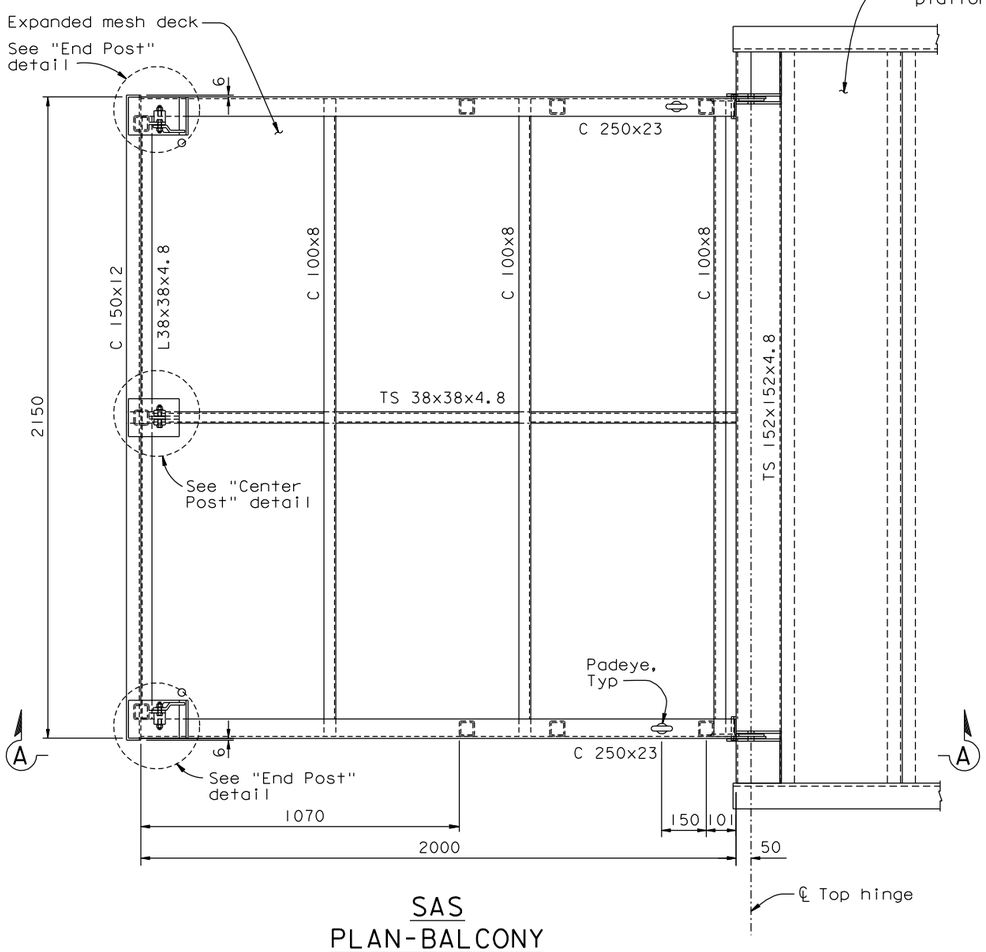

SAS
PLAN-BALCONY
1:10

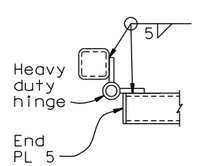

SECTION E-E
1:5

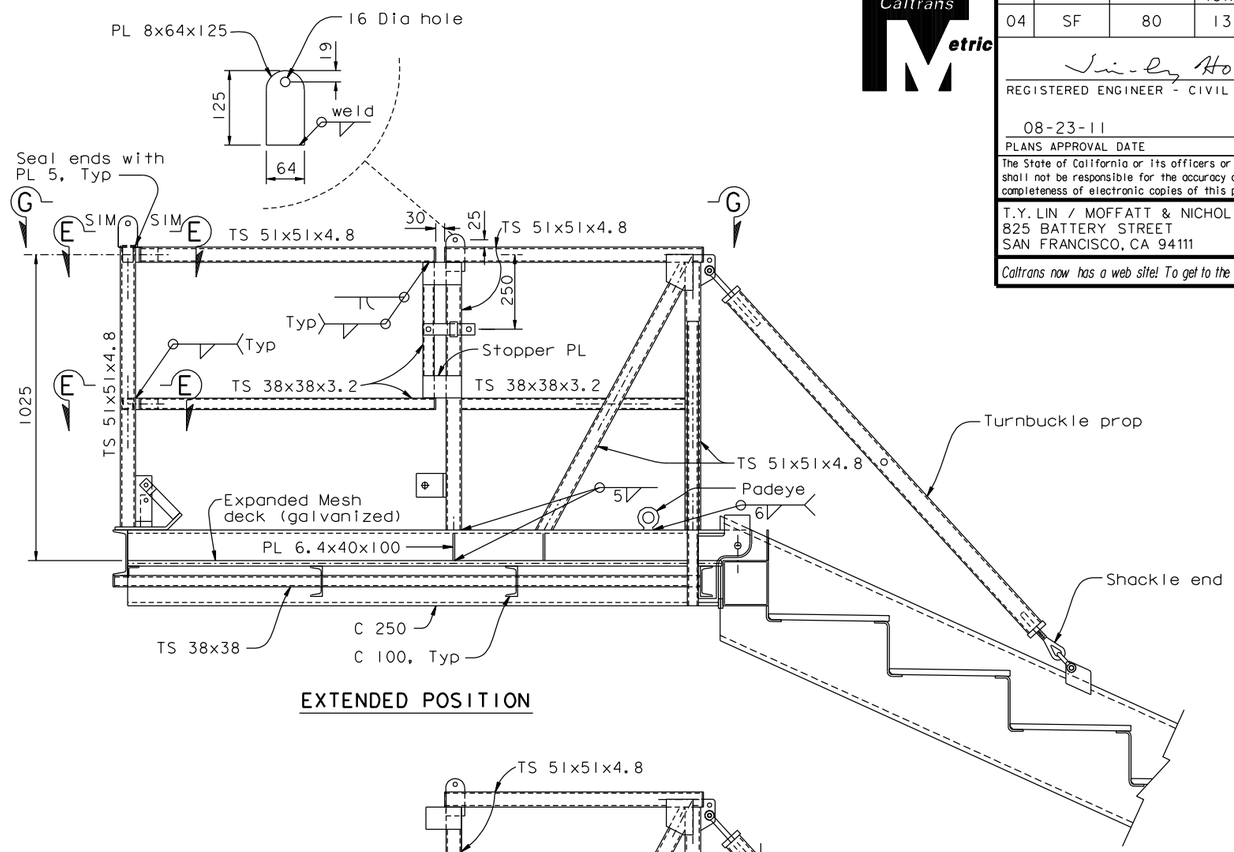

EXTENDED POSITION

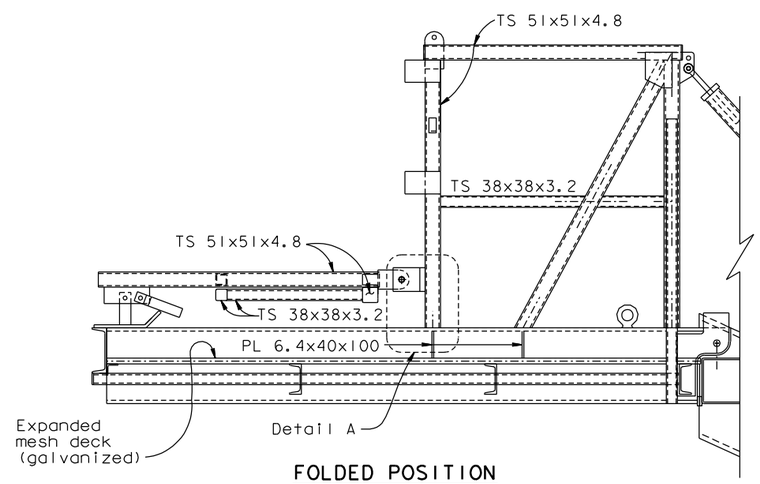

FOLDED POSITION

SECTION A-A
1:10

NOTES:

1. For details not shown, see "Traveler Common Details No. 1" sheet.
2. For View G-G, see "Traveler Common Details No. 1B" sheet.
3. For Detail A, "End Post" and "Center Post" details, see "Traveler Common Details No. 1C" sheet.
4. Padeyes shall be Crosby size No. 4 or equivalent, with a 25 mm diameter center hole.
5. Special care shall be taken to insure that the complete hinge and latch assembly will hold the safety railing in a steady manner, free of wobble while in the raised position. Maximum allowable displacement from vertical at top of railing when latched shall be 25 mm.

CONTRACT CHANGE ORDER NO. _____
SHEET ____ OF ____

REQUESTS FOR INFORMATION NOT ADDRESSED IN THIS CCO REMAIN IN FORCE

ALL DIMENSIONS ARE IN MILLIMETERS UNLESS OTHERWISE SHOWN

R. Valizadeh/V. Toan/Y.L./W.L./F.C.
DESIGN OVERSIGHT
SIGN OFF DATE 08/23/11

MARK	DATE	DESCRIPTIONS	BY	CH'D	CCO#
0	08/23/11	MISCELLANEOUS TRAVELER MODIFICATONS	TH	JD	183

REVISIONS

	BY	CHECKED
DESIGN	T. Ho	J. Duxbury
DETAILS	A. Baumberger	J. Duxbury
QUANTITIES	A. Baumberger	J. Duxbury

PREPARED FOR THE STATE OF CALIFORNIA DEPARTMENT OF TRANSPORTATION

R. Manzanarez
PROJECT ENGINEER

BRIDGE NO. 34-0006L/R
KILOMETER POST 13.2/13.9

SAN FRANCISCO OAKLAND BAY BRIDGE
EAST SPAN SEISMIC SAFETY PROJECT
SELF-ANCHORED SUSPENSION BRIDGE
(SUPERSTRUCTURE & TOWER)

TRAVELER COMMON DETAILS NO. 1A

Rev. Date: 5-18-98

ORIGINAL SCALE IN MILLIMETERS FOR REDUCED PLANS 0 10 20 30 40 50 60 70 80 90 100

CU 04
EA 0120F1

DISREGARD PRINTS BEARING EARLIER REVISION DATES 08/23/11

REVISION DATES (PRELIMINARY STAGE ONLY)

SHEET 666S1 OF

FILE => I:\bb\04-012001\sas\contract plans and cco\cco\cco#183\7-revision 08-23-11\dgn\aktrv080a.dgn

USERNAME => DWinrow DATE PLOTTED => 23 AUG 2011 TIME PLOTTED => 13:40:43

100% PS&E

DIST.	COUNTY	ROUTE	KILOMETER POST TOTAL PROJECT	SHEET NO.	TOTAL SHEETS
04	SF	80	13.2/13.9	1083S2	1204

Caltrans Metric

REGISTERED ENGINEER - CIVIL

08-23-11
PLANS APPROVAL DATE

REGISTERED PROFESSIONAL ENGINEER — Tien Hung Ho — No. C 43990 — Exp. 06/30/13 — CIVIL — STATE OF CALIFORNIA

The State of California or its officers or agents shall not be responsible for the accuracy or completeness of electronic copies of this plan sheet.

T.Y. LIN / MOFFATT & NICHOL
825 BATTERY STREET
SAN FRANCISCO, CA 94111

Caltrans now has a web site! To get to the web site, go to: http://www.dot.ca.gov

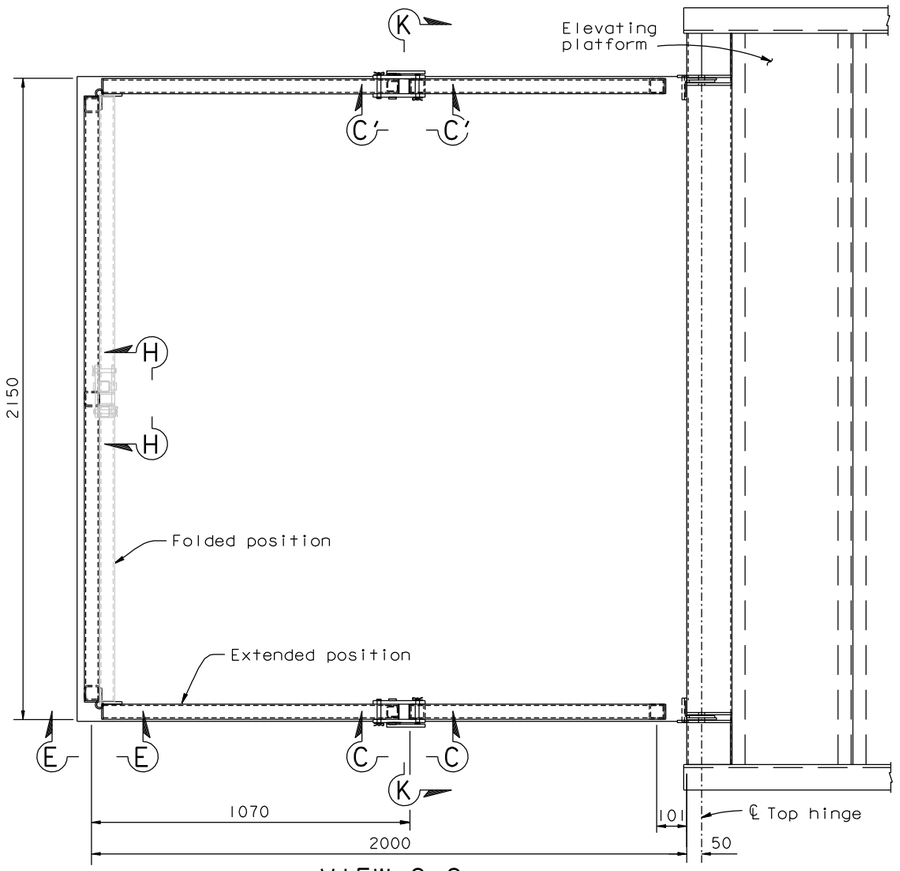

VIEW G-G
1:10

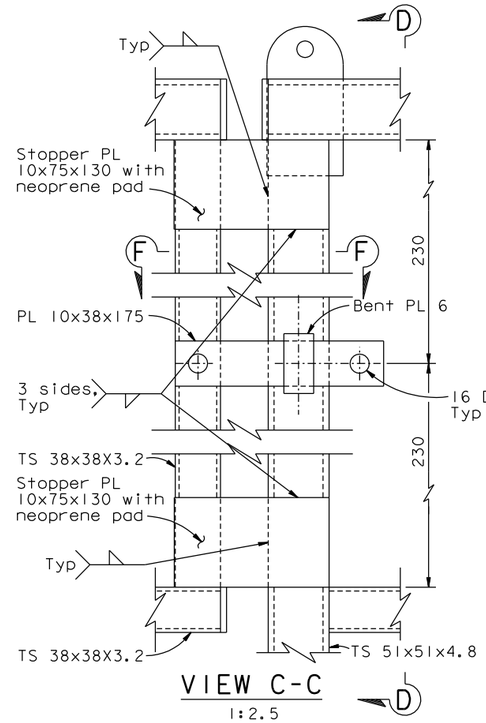

VIEW C-C
1:2.5

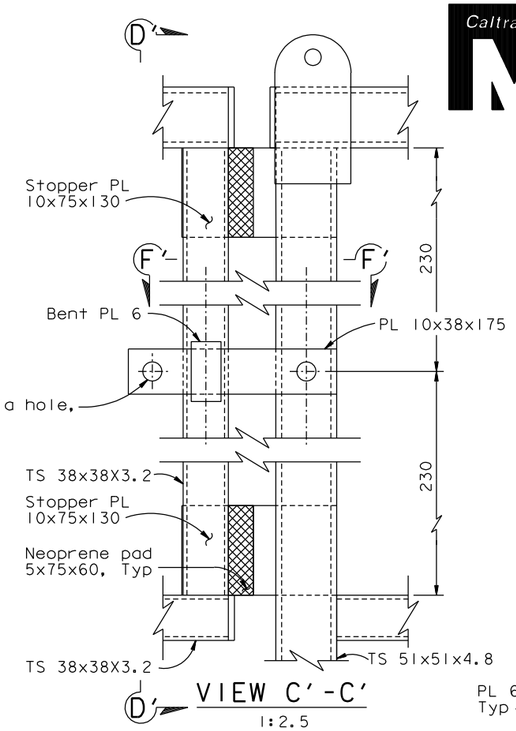

VIEW C'-C'
1:2.5

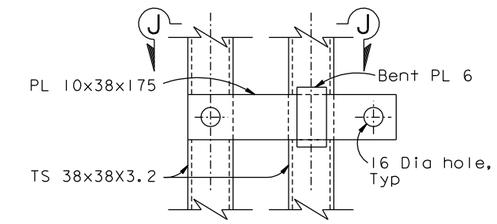

VIEW H-H
1:2.5

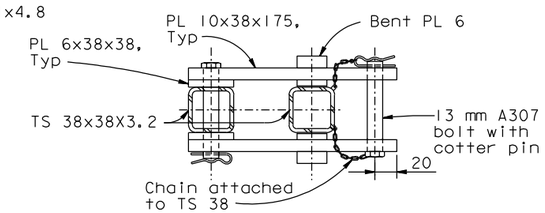

SECTION J-J
1:2.5

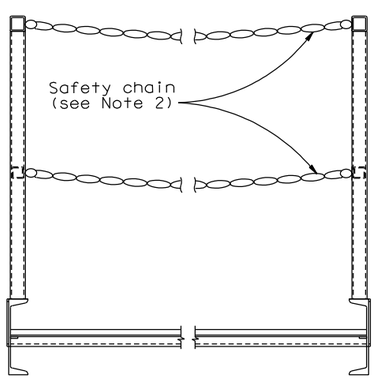

SECTION K-K
1:10

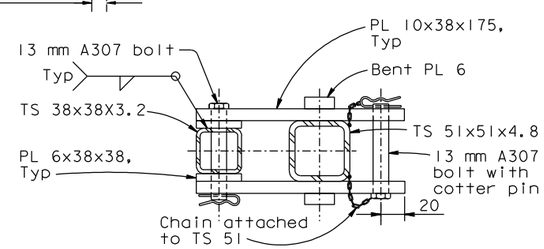

SECTION F-F
1:2.5

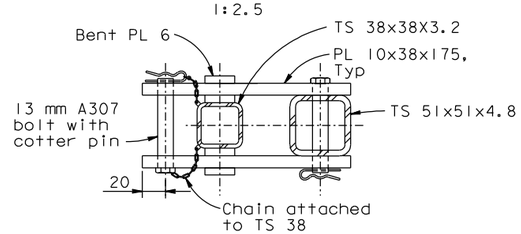

SECTION F'-F'
1:2.5

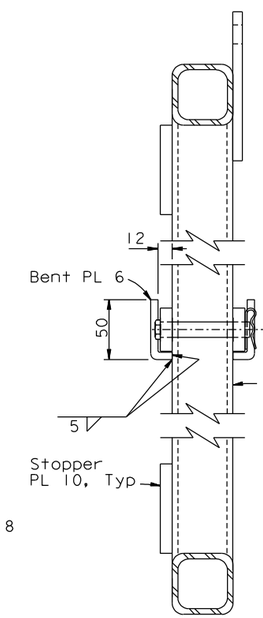

VIEW D-D
1:2.5

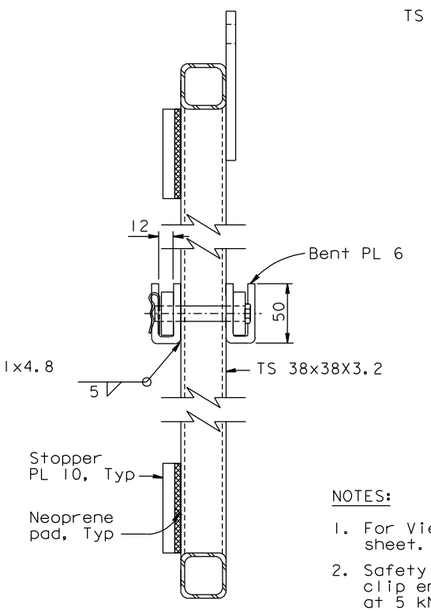

VIEW D'-D'
1:2.5

ALL DIMENSIONS ARE IN MILLIMETERS UNLESS OTHERWISE SHOWN

NOTES:

1. For View E-E, see "Traveler Common Details No. 1C" sheet.
2. Safety chain shall be galvanized chain with spring clip end fasteners. Chain and fasteners to be rated at 5 kN (1000 lb) breaking load.

CONTRACT CHANGE ORDER NO. _____
SHEET ____ OF ____

REQUESTS FOR INFORMATION NOT ADDRESSED IN THIS CCO REMAIN IN FORCE

R. Valizadeh/V. Toan/Y.L./W.L./F.C.
DESIGN OVERSIGHT
SIGN OFF DATE 08/23/11

MARK	DATE	DESCRIPTIONS	BY	CH'D	CCO#
0	08/23/11	MISCELLANEOUS TRAVELER MODIFICATONS	TH	JD	183

REVISIONS

DESIGN	BY T. Ho	CHECKED J. Duxbury	
DETAILS	BY A. Baumberger	CHECKED J. Duxbury	
QUANTITIES	BY A. Baumberger	CHECKED J. Duxbury	

PREPARED FOR THE STATE OF CALIFORNIA DEPARTMENT OF TRANSPORTATION

R. Manzanarez
PROJECT ENGINEER

BRIDGE NO. 34-0006L/R
KILOMETER POST 13.2/13.9

SAN FRANCISCO OAKLAND BAY BRIDGE
EAST SPAN SEISMIC SAFETY PROJECT
SELF-ANCHORED SUSPENSION BRIDGE
(SUPERSTRUCTURE & TOWER)

TRAVELER COMMON DETAILS NO. 1B

Rev. Date: 5-18-98

ORIGINAL SCALE IN MILLIMETERS FOR REDUCED PLANS 0 10 20 30 40 50 60 70 80 90 100

CU 04
EA 0120F1

DISREGARD PRINTS BEARING EARLIER REVISION DATES 08/23/11

REVISION DATES (PRELIMINARY STAGE ONLY)

SHEET 666S2 OF

FILE => I:\bb\04-01200I\sas\contract plans and cco\cco\cco#183\7-revision 08-23-11\dgn\aktrv080b.dgn

USERNAME => DWinrow DATE PLOTTED => 23 AUG 2011 TIME PLOTTED => 13:42:11

100% PS&E

DIST.	COUNTY	ROUTE	KILOMETER POST TOTAL PROJECT	SHEET NO.	TOTAL SHEETS
04	SF	80	13.2/13.9	1083S3	1204

REGISTERED ENGINEER - CIVIL

08-23-11
PLANS APPROVAL DATE

The State of California or its officers or agents shall not be responsible for the accuracy or completeness of electronic copies of this plan sheet.

REGISTERED PROFESSIONAL ENGINEER Tien Hung Ho No. C 43990 Exp. 06/30/13 CIVIL STATE OF CALIFORNIA

T.Y. LIN / MOFFATT & NICHOL
825 BATTERY STREET
SAN FRANCISCO, CA 94111

Caltrans now has a web site! To get to the web site, go to: http://www.dot.ca.gov

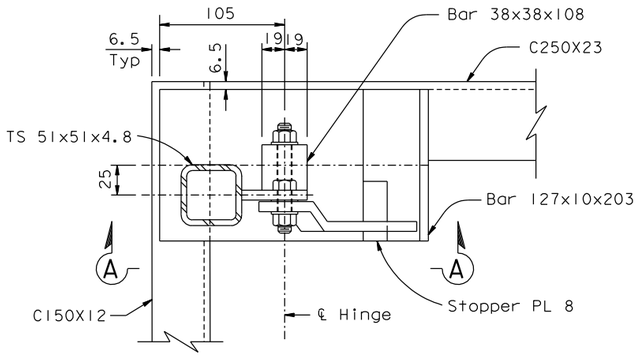

END POST
1:2.5

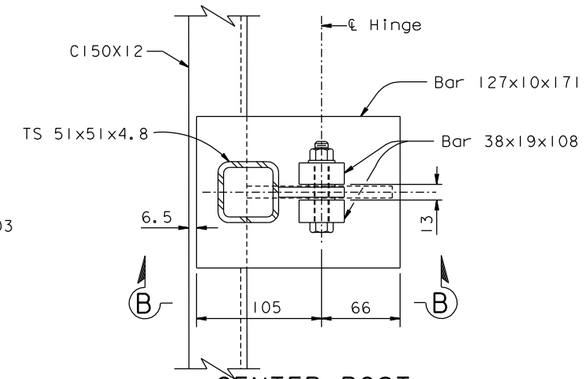

CENTER POST
1:2.5

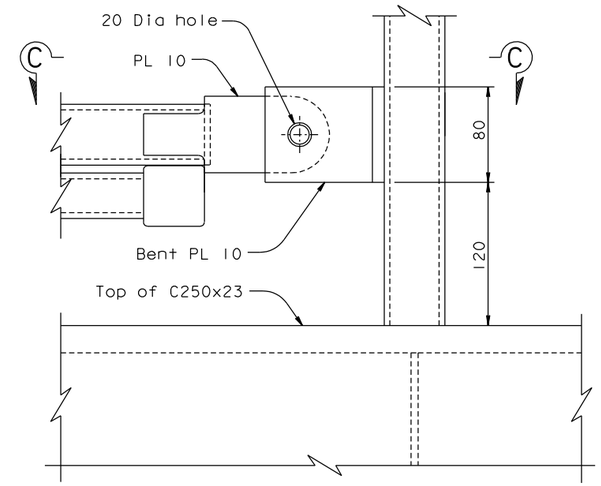

DETAIL A
1:2.5

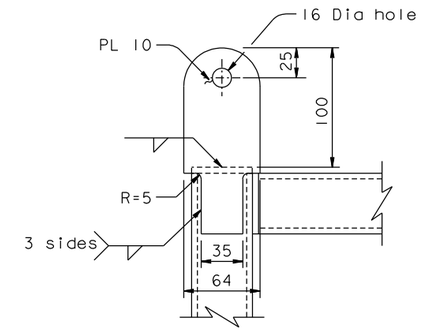

VIEW E-E
1:2.5

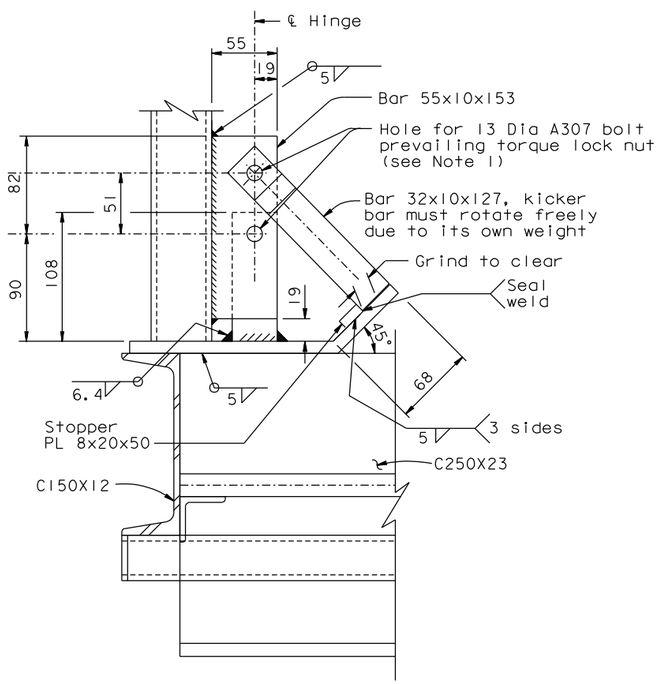

SECTION A-A
1:2.5

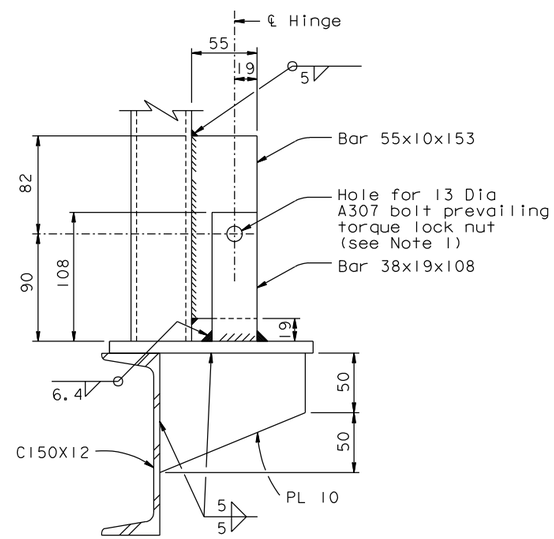

SECTION B-B
1:2.5

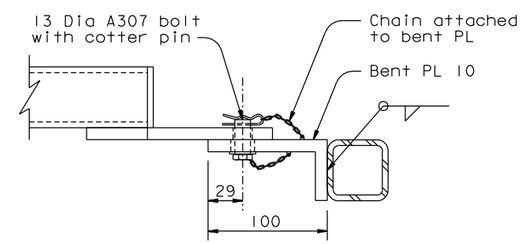

SECTION C-C
1:2.5

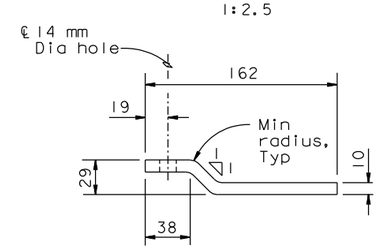

KICKER BAR
1:2.5

NOTES:

1. For 13 Dia A307 bolts, threads must be excluded from the shear plane.

CONTRACT CHANGE ORDER NO. _____
SHEET ____ OF ____

REQUESTS FOR INFORMATION NOT ADDRESSED IN THIS CCO REMAIN IN FORCE

ALL DIMENSIONS ARE IN MILLIMETERS UNLESS OTHERWISE SHOWN

MARK	DATE	DESCRIPTIONS	BY	CH'D	CCO#
0	08/23/11	MISCELLANEOUS TRAVELER MODIFICATONS	TH	JD	183

REVISIONS

R. Valizadeh/V. Toan/Y.L./W.L./F.C.
DESIGN OVERSIGHT
Ryan Valizadeh / Vong Toan / Y. Liu
SIGN OFF DATE 08/23/11

DESIGN	BY T. Ho	CHECKED J. Duxbury	
DETAILS	BY A. Baumberger	CHECKED J. Duxbury	
QUANTITIES	BY A. Baumberger	CHECKED J. Duxbury	

PREPARED FOR THE STATE OF CALIFORNIA DEPARTMENT OF TRANSPORTATION

R. Manzanarez
PROJECT ENGINEER

BRIDGE NO. 34-0006L/R
KILOMETER POST 13.2/13.9

SAN FRANCISCO OAKLAND BAY BRIDGE
EAST SPAN SEISMIC SAFETY PROJECT
SELF-ANCHORED SUSPENSION BRIDGE
(SUPERSTRUCTURE & TOWER)

TRAVELER COMMON DETAILS NO. IC

Rev. Date: 5-18-98

ORIGINAL SCALE IN MILLIMETERS FOR REDUCED PLANS 0 10 20 30 40 50 60 70 80 90 100

CU 04
EA 0120F1

DISREGARD PRINTS BEARING EARLIER REVISION DATES 08/23/11

REVISION DATES (PRELIMINARY STAGE ONLY)

SHEET 666S3 OF

FILE => I:\bb\04-012001\sas\contract plans and cco\cco\cco*183\7-revision 08-23-11\dgn\aktrv080c.dgn

100 % PS&E

USERNAME => DWinrow DATE PLOTTED => 23 AUG 2011 TIME PLOTTED => 13:43:04

DIST.	COUNTY	ROUTE	KILOMETER POST TOTAL PROJECT	SHEET NO.	TOTAL SHEETS
04	SF	80	13.2/13.9	1104R4	1204

Caltrans Metric

REGISTERED ENGINEER - CIVIL

12-6-04
PLANS APPROVAL DATE

REGISTERED PROFESSIONAL ENGINEER Bashkim Prishtina No. C 053561 Exp. 6/30/11 CIVIL STATE OF CALIFORNIA

The State of California or its officers or agents shall not be responsible for the accuracy or completeness of electronic copies of this plan sheet.

T.Y. LIN / MOFFATT & NICHOL
825 BATTERY STREET
SAN FRANCISCO, CA 94111

Caltrans now has a web site! To get to the web site, go to: http://www.dot.ca.gov

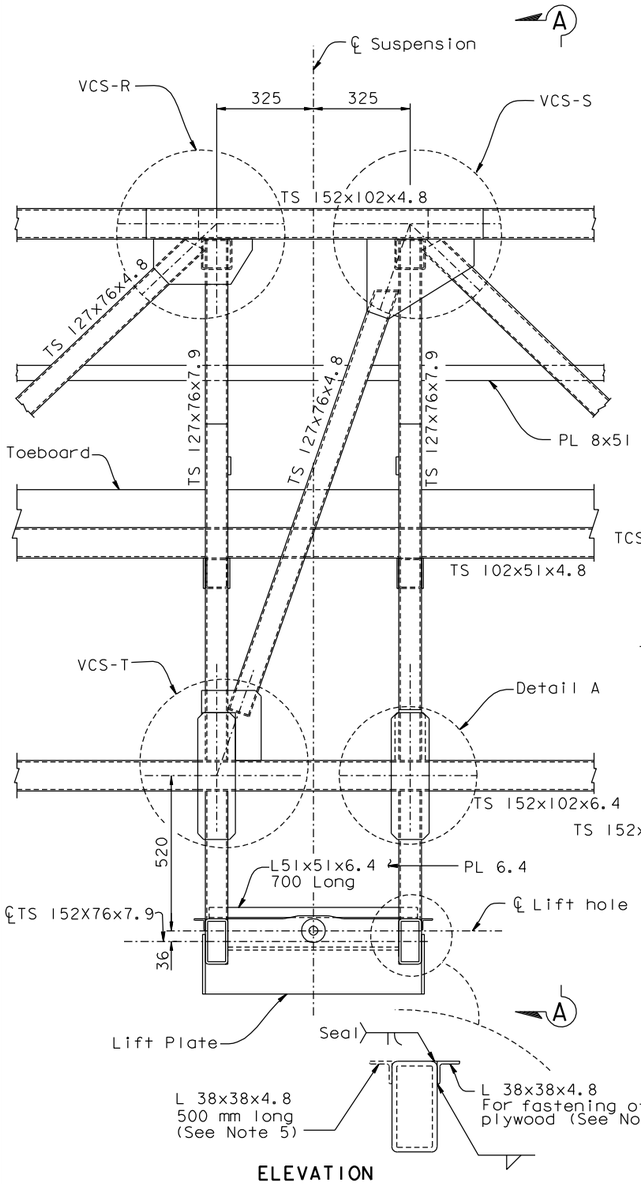

ELEVATION
View from Exterior

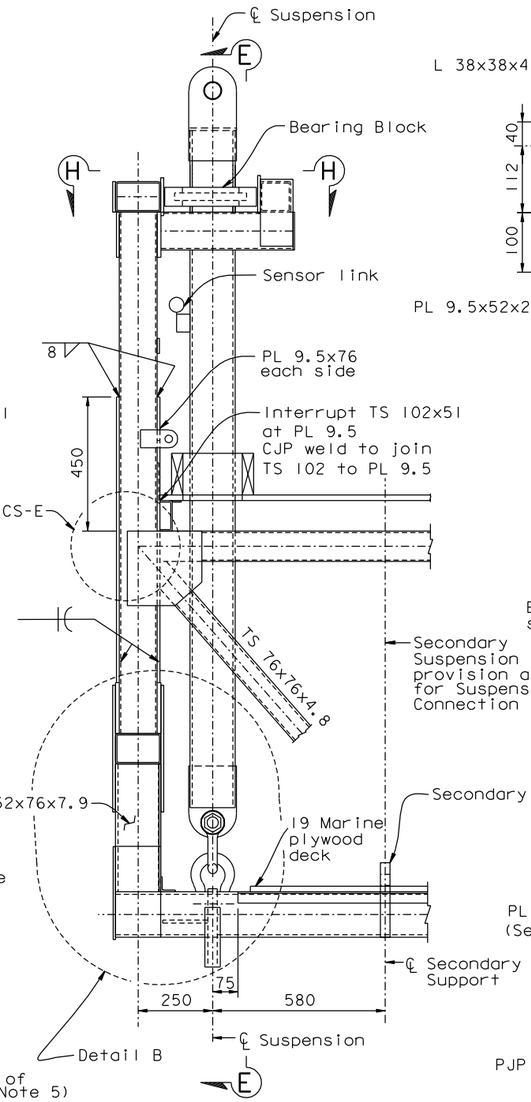

SECTION A-A

SUSPENSION CONNECTION A

1:10

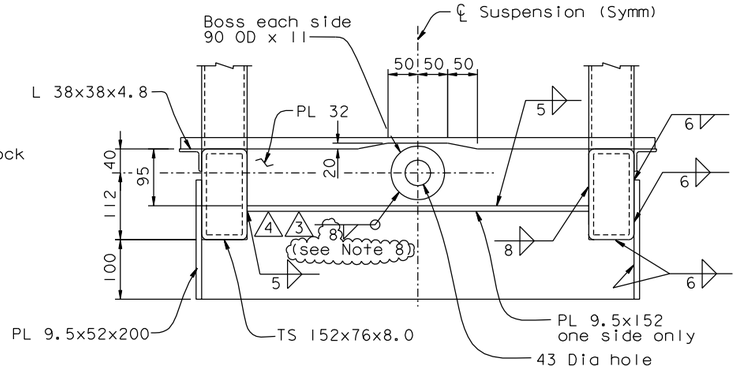

LIFT PLATE

1:5
SAS Travelers

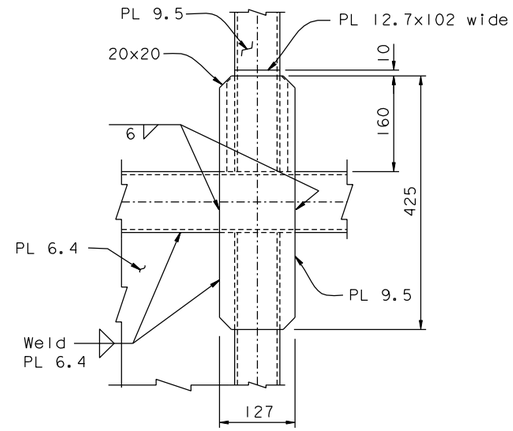

See Detail B for welding

DETAIL A

1:5

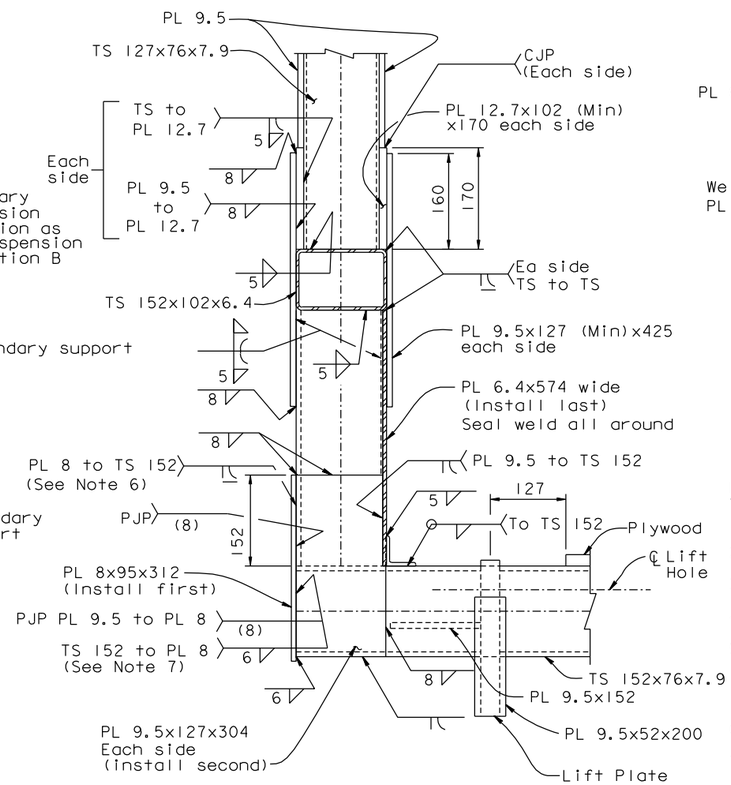

DETAIL B

1:5

NOTES:

1. For connection Type VCS & TCS, see "Traveler Connection Details" sheets.
2. For Section E-E, see "Traveler Suspension Connection Details No.6" sheet.
3. For Section H-H, see "Traveler Suspension Connection Details No.4" sheet.
4. For secondary support, see "Traveler Suspension Connection Details No.2" sheet.
5. Angle shall be clipped at gusset plate and secondary support. At these locations an additional 500 mm long angle shall be provided on the opposite side of the TS 152x76 to support the plywood.
6. Curtail 8 mm plate at bottom of PL 9.5x127x425 and CJP weld horizontally to join the two plates.
7. At the Contractor's option, a 6 mm flush ground PJP weld for connecting PL 8 to TS 152x76 may be used.
8. At the Contractor's option, the 8 mm fillet between the Boss PL and the PL 32 may be built up to a 10 mm fillet over a 270 degrees arc around the boss PL, subject to review and approval of the Engineer. (4)

CONTRACT CHANGE ORDER NO. _____
SHEET ___ OF ___

REQUESTS FOR INFORMATION NOT ADDRESSED IN THIS CCO REMAIN IN FORCE

MARK	DATE	DESCRIPTIONS	BY	CH'D	CCO#
4	02/17/11	TRAVELER BOSS PL WELD DETAIL	BP	AS	183
3	12/23/10	TRAVELER BOSS PL WELD DETAIL	BP	AS	183
2	02/12/10	TRAVELER MODIFICATIONS	BP	AS	24S1
1	06/19/09	TRAVELER MODIFICATIONS	BP	AS	24S1

REVISIONS

R. Valizadeh/V. Toan/Y.L./W.L./F.C.
DESIGN OVERSIGHT
SIGN OFF DATE 02/17/11

	BY	CHECKED
DESIGN	J. Otter	B. Prishtina
DETAILS	J. Otter	M. Roberts
QUANTITIES	J. Otter	M. Roberts

PREPARED FOR THE STATE OF CALIFORNIA DEPARTMENT OF TRANSPORTATION

R. Manzanarez
PROJECT ENGINEER

ALL DIMENSIONS ARE IN MILLIMETERS UNLESS OTHERWISE SHOWN

BRIDGE NO. 34-0006L/R
KILOMETER POST 13.2/13.9

SAN FRANCISCO OAKLAND BAY BRIDGE
EAST SPAN SEISMIC SAFETY PROJECT
SELF-ANCHORED SUSPENSION BRIDGE
(SUPERSTRUCTURE & TOWER)

TRAVELER SUSPENSION CONNECTION DETAILS NO. 1

Rev. Date: 5-18-98

ORIGINAL SCALE IN MILLIMETERS FOR REDUCED PLANS 0 10 20 30 40 50 60 70 80 90 100

CU 04
EA 0120F1

DISREGARD PRINTS BEARING EARLIER REVISION DATES

REVISION DATES (PRELIMINARY STAGE ONLY) 04/15/02 07/09/02 12/19/02

SHEET 687R4 OF

FILE => L:\BB\04-012001\SAS\Contract Plans and CCO\CCO\CCO#183\3-Revision 02-17-11\DGN\aktrv096.dgn

100% PS&E

USERNAME => DWinrow DATE PLOTTED => 17 FEB 2011 TIME PLOTTED => 12:08:47

DIST.	COUNTY	ROUTE	KILOMETER POST TOTAL PROJECT	SHEET NO.	TOTAL SHEETS
04	SF	80	13.2/13.9	112IR5	1204

Caltrans Metric

George Baker
REGISTERED ENGINEER - CIVIL
12-6-04
PLANS APPROVAL DATE

REGISTERED PROFESSIONAL ENGINEER George S. Baker No. C 57112 Exp. 12/31/05 CIVIL STATE OF CALIFORNIA

The State of California or its officers or agents shall not be responsible for the accuracy or completeness of electronic copies of this plan sheet.

T.Y. LIN / MOFFATT & NICHOL
825 BATTERY STREET
SAN FRANCISCO, CA 94111

Caltrans now has a web site! To get to the web site, go to: http://www.dot.ca.gov

MAIN TRAVELERS - RAIL JOINT LOCATIONS GIVEN BY PANEL POINT (PP) NUMBERS

Rail Section No.	Sliding Connection	Fixed Connection	Sliding Connection
** 1	Near PP 8.5	PP 9	PP 10
2	PP 10	PP 11	PP 12
3	PP 12	PP 13	PP 14
4	PP 14	PP 15	PP 16
5	PP 16	PP 17	PP 18
6	PP 18	PP 19	PP 20
7	PP 20	PP 21	PP 22
8	PP 22	PP 23	PP 24
9	PP 24	PP 25	PP 26
10	PP 26	PP 27	PP 28
11	PP 28	PP 29	PP 30
12	PP 30	PP 31	PP 32
13	PP 32	PP 33	PP 34

Rail Section No.	Sliding Connection	Fixed Connection	Sliding Connection
14	PP 34	PP 35	PP 36
15	PP 36	PP 37	PP 38
16	PP 38	PP 39	PP 40
17	PP 40	PP 41	PP 42
18	PP 42	PP 43	PP 44
19	PP 44	PP 45	PP 46
20	PP 46	PP 47	PP 48
21	PP 48	PP 49	PP 50
22	PP 50	PP 51	PP 52
23	PP 52	PP 53	PP 54
24	PP 54	PP 55	PP 56
25	PP 56	PP 57	PP 58
26	PP 58	PP 59	PP 60

Rail Section No.	Sliding Connection	Fixed Connection	Sliding Connection
27	PP 60	PP 61	PP 62
28	PP 62	PP 63	PP 64
29	PP 64	PP 65	PP 66
30	PP 66	PP 67	PP 68
31	PP 68	PP 69	PP 70
32	PP 70	PP 71	PP 72
33	PP 72	PP 73	PP 74
34	PP 74	PP 75	PP 76
35	PP 76	PP 77	PP 78
36	PP 78	PP 79	PP 80
37	PP 80	PP 81	PP 82
38	PP 82	PP 83	PP 84
39	PP 84	PP 85	PP 86

Rail Section No.	Sliding Connection	Fixed Connection	Sliding Connection
40	PP 86	PP 87	PP 88
41	PP 88	PP 89	PP 90
42	PP 90	PP 91	PP 92
43	PP 92	PP 93	PP 94
44	PP 94	PP 95	PP 96
45	PP 96	PP 97	PP 98
46	PP 98	PP 99	PP 100
47	PP 100	PP 101	PP 102

Rail Section No.	Sliding Connection	Fixed Connection	Sliding Connection
48	PP 102	PP 103	PP 104
49	PP 104	PP 105	PP 106
50	PP 106	PP 107	PP 108
51	PP 108	PP 109 (K)	PP 110 (K)
52	PP 110 (K)	PP 111 (K)	PP 112
53	PP 112	PP 113	PP 114
54	PP 114	PP 115	PP 116
** 55	PP 116	PP 117	PP 118 & PP 118.35
** 56	PP 119.65 & PP 120	PP 121	PP 122
57	PP 122	none	PP 123
58	PP 123	PP 124	PP 125
59	PP 125	PP 126	PP 127
** 60	PP 127	PP 128	see schematic

K denotes kinked rail at these panel points.
See "Traveler Rail Details No. 15" sheet.

**Denotes Special Rail End Details

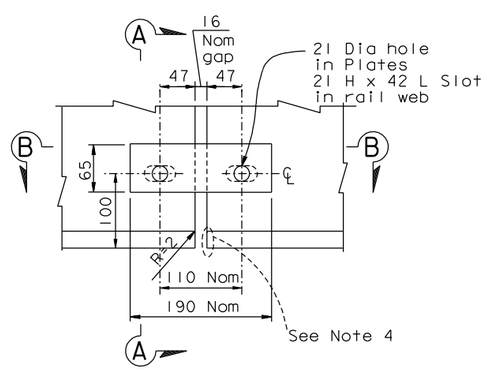

SLIDING JOINT DETAIL
1:4

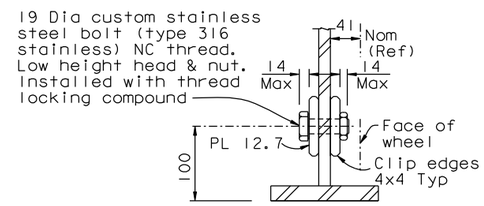

SECTION A-A
1:4

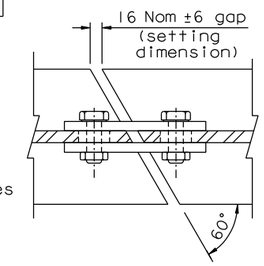

SECTION B-B
1:4

TRAVELER RAIL NOTES - SAS & E2/E3 TRAVELER RAILS

1. Rail material (flange plates & web plates) to be ASTM A572 or A709 grade 50 (Fy= 345 MPa).
2. Rail, boss plates & angles to be hot dip galvanized per specification.
3. The Nominal 16 mm gap between rail sections is to allow for slippage movement between rail and box in major seismic event.
4. Rail gaps to be set only after all dead load is in place on the structure. Tolerances across gaps to be per "Traveler Rail Details No. 15" sheet.
5. Rail to be fabricated in one to three span units as called out on this sheet.
6. Rail to be supported at panel points of the box structure at 5300 maximum c/c supports, unless noted otherwise.
7. Traveler rail and mounting on the Skyway structure is by Others except as noted below:
   - The inner (SAS) rail set (which crosses the Hinge A joint) is to be supplied and installed under this contract. It will be mounted to brackets on the Skyway structure which will be supplied and installed by Others.
   - The outer (transition span) rail set bolts are to be tightened under this contract after the connection of the transition span to the SAS and all dead load is in place on the structure.
8. Fabricator is to select a connection from types as appropriate to the geometry and to detail the connection within the permissible ranges of variation shown on the details.
9. For details of the various connection types, see "Traveler Rail Details" sheets.
10. Location of traveler rails is described on the "Traveler Operating Ranges" sheets.
11. All bolts to be ASTM A325 unless otherwise noted on the plans.
12. For special support details, see "Traveler Rail Details No. 14" sheet.

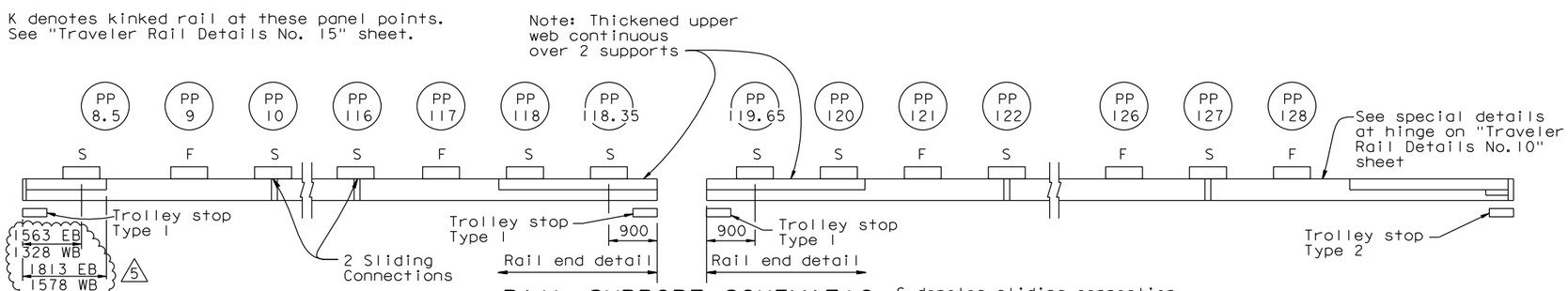

RAIL SUPPORT SCHEMATIC
NTS

S denotes sliding connection
F denotes fixed connection

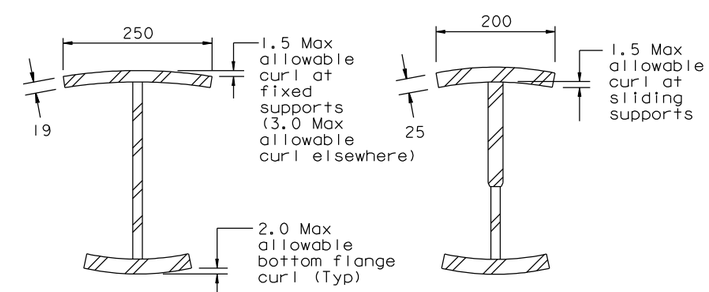

MAXIMUM ALLOWABLE FLANGE DEFORMATIONS
NTS

REVISION 3 SUPERSEDES REVISIONS 1 & 2

CONTRACT CHANGE ORDER NO. _____
SHEET ___ OF ___

REGISTERED PROFESSIONAL ENGINEER Marwan N. Nader No. C 054426 Exp. 12/31/11 CIVIL STATE OF CALIFORNIA

FOR REVISIONS ONLY

REQUESTS FOR INFORMATION NOT ADDRESSED IN THIS CCO REMAIN IN FORCE

MARK	DATE	DESCRIPTIONS	BY	CH'D	CCO#
5	08/23/11	MISCELLANEOUS TRAVELER MODIFICATIONS	TH	MN	183
4	09/15/10	TRAVELER RAIL TOLERANCES	MN	GB	168
3	06/05/09	TRAVELER RAIL MODIFICATIONS	MN	GB	24S0
2	07/20/07	RAIL CHANGE & MISCELLANEOUS DETAILS	GB	NV	24
1	08/04/06	TRAVELER RAILS	GB	NV	24

REVISIONS

R. Valizadeh/V. Toan/Y.L./W.L./F.C.
DESIGN OVERSIGHT
Roya Valizadeh / Vong Toan / Y. Liu
SIGN OFF DATE 08/23/11

Rev. Date: 5-18-98

	BY	CHECKED
DESIGN	J. Otter	G. Baker
DETAILS	J. Otter	M. Roberts
QUANTITIES	J. Otter	M. Roberts

PREPARED FOR THE STATE OF CALIFORNIA DEPARTMENT OF TRANSPORTATION

ALL DIMENSIONS ARE IN MILLIMETERS UNLESS OTHERWISE SHOWN

R. Manzanarez
PROJECT ENGINEER

BRIDGE NO. 34-0006L/R
KILOMETER POST 13.2/13.9

SAN FRANCISCO OAKLAND BAY BRIDGE
EAST SPAN SEISMIC SAFETY PROJECT
SELF-ANCHORED SUSPENSION BRIDGE
(SUPERSTRUCTURE & TOWER)

TRAVELER RAIL DETAILS NO. 2

ORIGINAL SCALE IN MILLIMETERS FOR REDUCED PLANS 0 10 20 30 40 50 60 70 80 90 100

CU 04
EA 0120F1

DISREGARD PRINTS BEARING EARLIER REVISION DATES

REVISION DATES (PRELIMINARY STAGE ONLY) 04/18/02 01/30/02 12/19/02

SHEET 704R5 OF

FILE => I:\bb\04-012001\sas\contract plans and cco\cco\cco#183\7-revision 08-23-11\dgn\aktrvl13.dgn

100 % PS&E

USERNAME => DWinrow DATE PLOTTED => 23 AUG 2011 TIME PLOTTED => 13:43:58

DIST.	COUNTY	ROUTE	KILOMETER POST TOTAL PROJECT	SHEET NO.	TOTAL SHEETS
04	SF	80	13.2/13.9	1132R4	1204

Caltrans Metric

George Baker
REGISTERED ENGINEER - CIVIL
12-6-04
PLANS APPROVAL DATE

REGISTERED PROFESSIONAL ENGINEER George S. Baker No. C 57112 Exp. 12/31/05 CIVIL STATE OF CALIFORNIA

The State of California or its officers or agents shall not be responsible for the accuracy or completeness of electronic copies of this plan sheet.

T.Y. LIN / MOFFATT & NICHOL
825 BATTERY STREET
SAN FRANCISCO, CA 94111

Caltrans now has a web site! To get to the web site, go to: http://www.dot.ca.gov

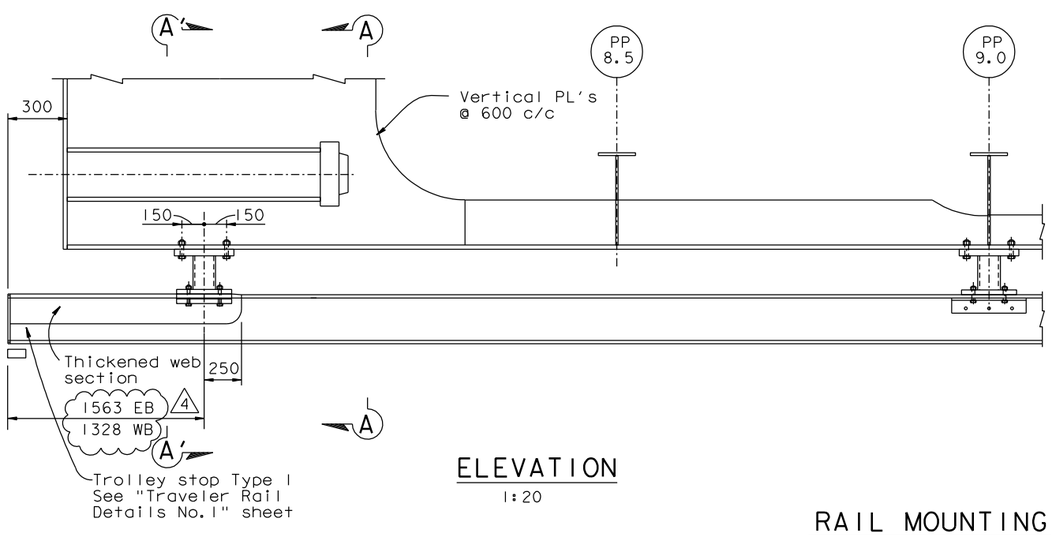

ELEVATION
1:20

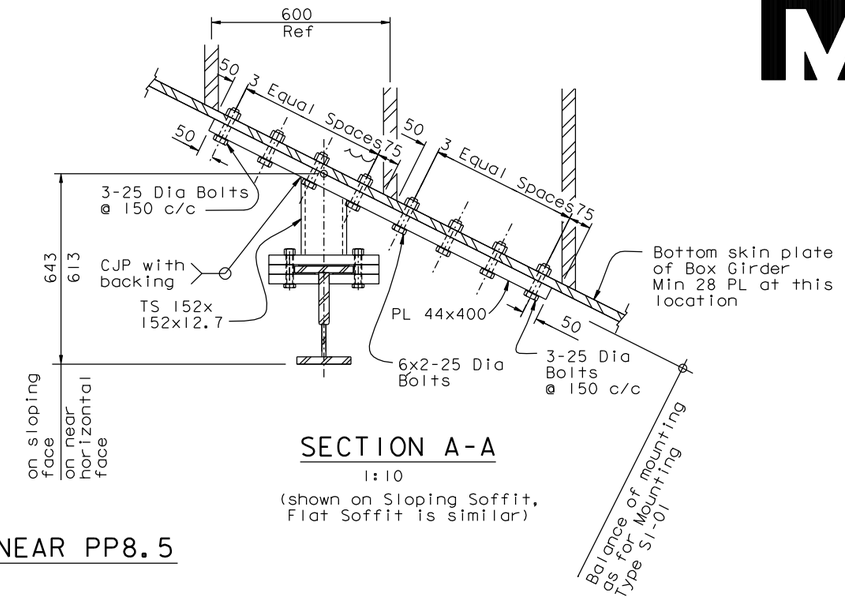

SECTION A-A
1:10
(shown on Sloping Soffit, Flat Soffit is similar)

RAIL MOUNTING NEAR PP8.5

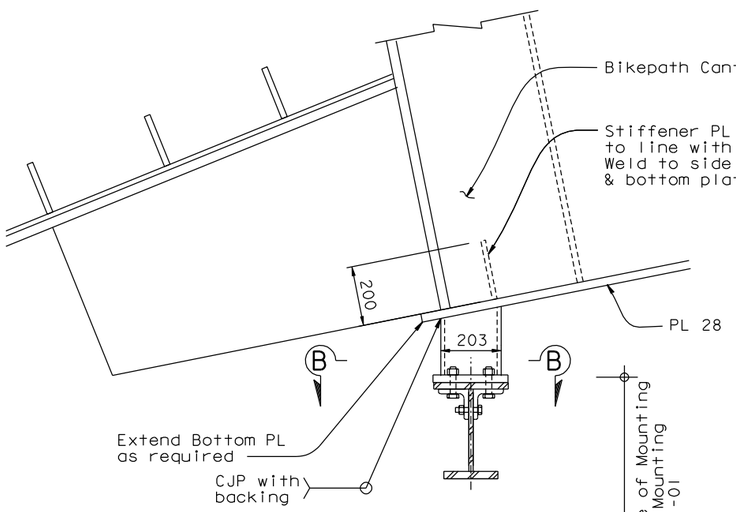

SAS EB
AT PP115

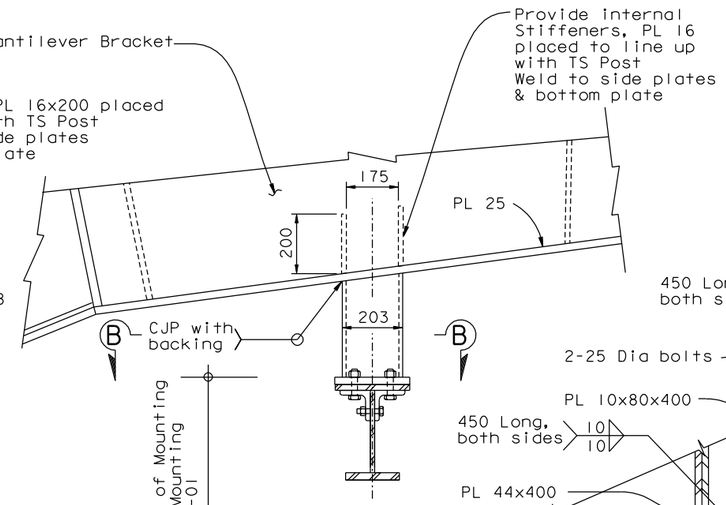

SAS EB
AT PP117
1:10

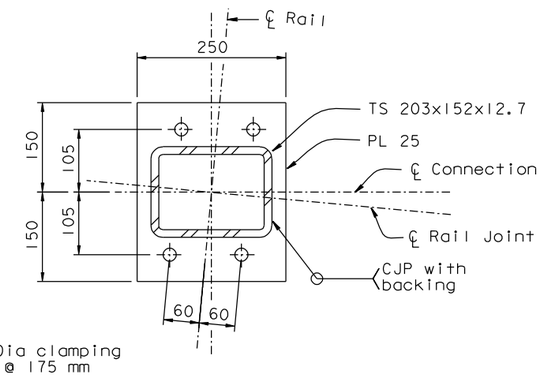

SECTION B-B
1:5

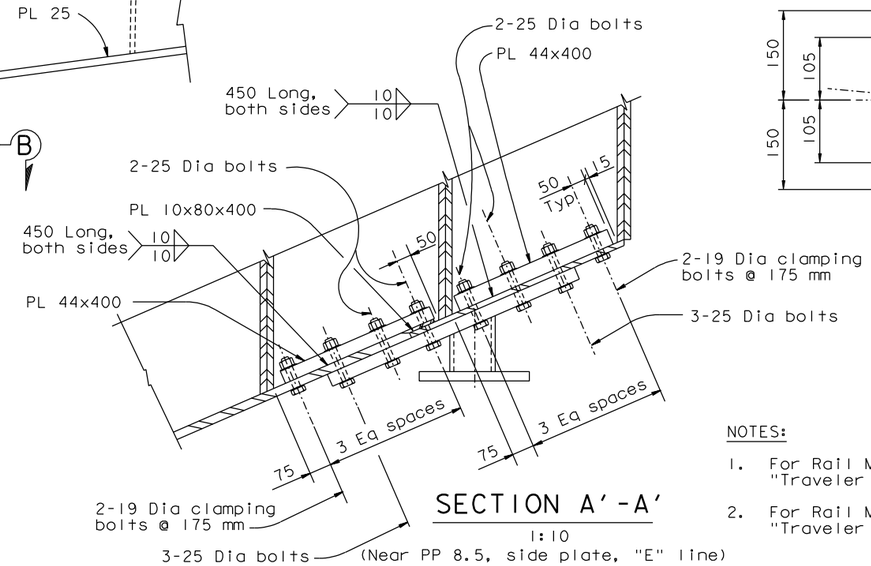

SECTION A'-A'
1:10
(Near PP 8.5, side plate, "E" line)

NOTES:

1. For Rail Mounting Type F1-01, see "Traveler Rail Details No.3" sheet.
2. For Rail Mounting Type S1-01, see "Traveler Rail Details No.6" sheet.

REGISTERED PROFESSIONAL ENGINEER Marwan N. Nader No. C 054426 Exp. 12/31/11 CIVIL STATE OF CALIFORNIA

FOR REVISIONS ONLY

REVISION 3 SUPERSEDES REVISIONS 1 & 2

CONTRACT CHANGE ORDER NO. _____
SHEET ____ OF ____

REQUESTS FOR INFORMATION NOT ADDRESSED IN THIS CCO REMAIN IN FORCE

MARK	DATE	DESCRIPTIONS	BY	CH'D	CCO#
4	08/23/11	MISCELLANEOUS TRAVELER MODIFICATIONS	TH	MN	183
3	05/18/09	TRAVELER RAIL MODIFICATIONS	MN	GB	24S0
2	07/20/07	RAIL CHANGE & MISCELLANEOUS DETAILS	GB	NV	24
1	08/04/06	TRAVELER RAILS	GB	NV	24

REVISIONS

ALL DIMENSIONS ARE IN MILLIMETERS UNLESS OTHERWISE SHOWN

R. Valizadeh/V. Toan/Y.L./W.L./F.C.
DESIGN OVERSIGHT
SIGN OFF DATE 08/23/11

	BY	CHECKED
DESIGN	J. Otter	G. Baker
DETAILS	J. Otter	M. Roberts
QUANTITIES	J. Otter	M. Roberts

PREPARED FOR THE STATE OF CALIFORNIA DEPARTMENT OF TRANSPORTATION

R. Manzanarez
PROJECT ENGINEER

BRIDGE NO. 34-0006L/R
KILOMETER POST 13.2/13.9

SAN FRANCISCO OAKLAND BAY BRIDGE
EAST SPAN SEISMIC SAFETY PROJECT
SELF-ANCHORED SUSPENSION BRIDGE
(SUPERSTRUCTURE & TOWER)

TRAVELER RAIL DETAILS NO. 13

Rev. Date: 5-18-98

ORIGINAL SCALE IN MILLIMETERS FOR REDUCED PLANS 0 10 20 30 40 50 60 70 80 90 100

CU 04
EA 0120F1

DISREGARD PRINTS BEARING EARLIER REVISION DATES 04/18/02 01/20/02 12/19/02

REVISION DATES (PRELIMINARY STAGE ONLY)

SHEET 715R4 OF

FILE => I:\bb\04-012001\sas\contract plans and cco\cco\cco#183\7-revision 08-23-11\dgn\aktrv119e.dgn

100% PS&E

USERNAME => DWinrow DATE PLOTTED => 23 AUG 2011 TIME PLOTTED => 13:47:14

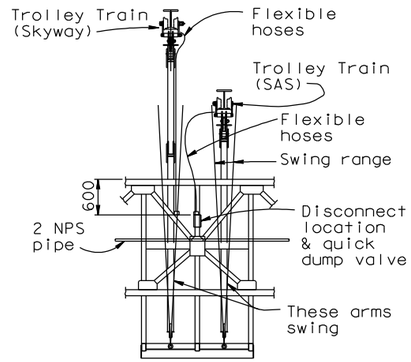

PIPING & DISCONNECT SCHEMATIC E2/E3 TRAVELERS

NTS

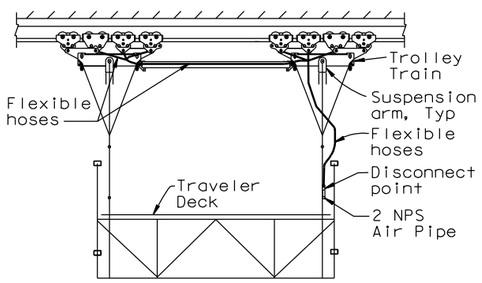

SKYWAY SUSPENSION

1:50

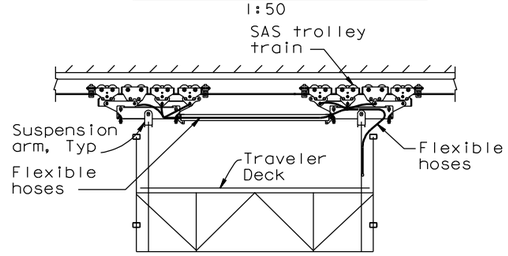

SAS SUSPENSION

1:50

PARTS FOR TROLLIES AND TROLLEY CONTROLS

Part/ No.	Description	Size	Quantity/ Traveler
1N	Throttle for North Trollies, Full flow. Deadman control. With built in emergency stop valve	1 1/4"	1
1S	Throttle for South Trollies, Full flow. Deadman control. With built in emergency stop valve	1 1/4"	1
2N	Pilot operated poppet valve for skew control on north motors	1 1/4"	1
2S	Pilot operated poppet valve for skew control on south motors	1 1/4"	1
3	Main System valve - pilot operated. Poppet Valve	1 1/2"	1
4 4A-4B	Quick Dump Valve for Valve 2N or 2S pilot system	1/4"	2
5	Pedal operated Main System Pilot Valve, deadman operation - To control Valve 3 (Note 20)	1/4"	2
5A	Trolley Air Lockout Valve (if elevating platforms are up)	1/4"	1
4 6A-6B	Double check valve - shuttle valve	3/8"	2
7A-7D	Pilot operated for operating valves 2N or 2S	1/4"	4
8	Pilot operated for applying brakes at extreme skew	3/8"	2
9	Bypass valve allowing brake release after brakes have been applied due to excess skew	3/8"	2
10	Quick Dump Valve for Brakes	1/2"	2
11	Quick Disconnect couplings. with closure caps. (Required on E2/E3 Travelers only) Note 2	1/2"	2: (4)
12	Quick Disconnect couplings. with closure caps. (Required on E2/E3 Travelers only) Note 2	1 1/4"	4: (8)
13	Exhaust Choke Valve for speed control	1/2"	12-SAS 24-E2/E3
14	Silencer	1/2"	12-SAS 24-E2/E3
15	Whistle valve	3/8"	1
16	Whistle		1
17	Twiflex Caliper Brakes, Spring on, pressure off		16-SAS 32-E2/E3
18	Ingersoll Rand piston air motor trolley		12-SAS 24-E2/E3
19	Lubricator, Filter and Pressure Regulator	1 1/2"	1
20	Gage	50 mm	1
21	NOT USED		
22	Coupling	2"	
23	Full Port Ball Valve	2"	
24	Flexible Supply Hose - 12,000 long	2"	2
25	Coupling	2"	2
26	Motor shutdown over-ride valve	1/4"	2
27	3-Way Manual Diversion Ball Valve with Latch-Lock Lever and Nut to allow maintenance and repair of the Pneumatic System at the Trolley.	1 1/2"	1
28	NOT USED		
29	Shuttle Valve: Will be actuated by either L1 or L4 as necessary.	1/4"	1
30	Inline Lubricator: 1. Use one for each port of each Trolley Motor. 2. Plumb as close to Motor as Possible.	3/4"	24-SAS 48-E2/E3
30-A	Air Manifold: 2 X 1 1/4" NPS inlets 3 X 3/4" NPS outlets	1 1/4"	8-SAS 16-E2/E3
L1-L4	Skew Control Limit Valve	1/4"	4

Function Description:

1. Pneumatic system operation for skew correction per skew orientation matrix & diagram. Limit switches L2 and L3 shutdown only the motor causing excessive skew at approx 50% of Max allowable skew. This function can be over-ridden when it is necessary to operate at a greater skew: (valves (26)).

2. Limit switches L1 and L4 apply all brakes when the critical skew is reached. The brakes may be released on either the North or the South trolleys through a manual over-ride ((9)).

NOTES:

1. For general notes see "Traveler Air System-02" sheet.

2. Quantities are for the portion of the disconnects that remain with the traveler scaffold. Quantities for the detachable portions are shown in parenthesis.

SKEW ORIENTATION MATRIX

CASE	MOTOR Ms	MOTOR Mn	SKEW	L2	L3	SHUT
1	F	F	+ve	Act.	-	Mn
2	R	R	+ve	Act.	-	Ms
3	R	F	+ve	Act.	-	Mn & M
4	F	F	-ve	-	Act.	Ms
5	R	R	-ve	-	Act.	Mn
6	F	R	-ve	-	Act.	Mn & Ms

4 LEGEND:

F - Travelling West

R - Travelling East

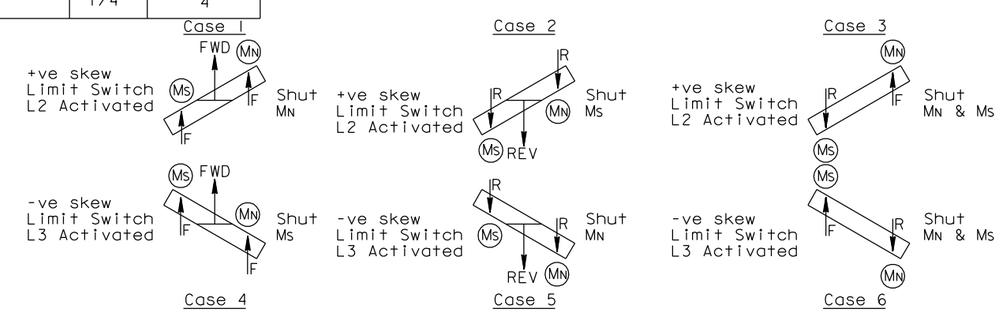

SKEW ORIENTATION DIAGRAM

REVISION 2 SUPERSEDES REVISION 1

CONTRACT CHANGE ORDER NO. _____

SHEET ____ OF ____

REQUESTS FOR INFORMATION NOT ADDRESSED IN THIS CCO REMAIN IN FORCE

REGISTERED PROFESSIONAL ENGINEER R. Henriksen No. M 029816 Exp. 06/30/12 MECHANICAL STATE OF CALIFORNIA

FOR REVISIONS ONLY

MARK	DATE	DESCRIPTIONS	BY	CH'D	CCO#
4	08/23/11	MISCELLANEOUS TRAVELER MODIFICATIONS	RH	AS	183
3	07/30/10	TRAVELER MODIFICATIONS	RH	NV	24SI
2	08/21/09	TRAVELER MODIFICATIONS	RH	NV	24SI
1	07/20/07	RAIL CHANGE & MISCELLANEOUS DETAILS	RD	NV	24

REVISIONS

R. Valizadeh/V. Toan/Y.L./W.L./F.C.
DESIGN OVERSIGHT
SIGN OFF DATE 08/23/11

	BY	CHECKED
DESIGN	J. Otter	R. Donikian
DETAILS	J. Otter	R. Donikian
QUANTITIES	J. Otter	M. Roberts

PREPARED FOR THE STATE OF CALIFORNIA DEPARTMENT OF TRANSPORTATION

R. Manzanarez
PROJECT ENGINEER

ALL DIMENSIONS ARE IN MILLIMETERS UNLESS OTHERWISE SHOWN

BRIDGE NO. 34-0006L/R
KILOMETER POST 13.2/13.9

CU 04
EA 0120F1

DISREGARD PRINTS BEARING EARLIER REVISION DATES

REVISION DATES (PRELIMINARY STAGE ONLY) 04/19/02 01/07/02 12/19/02

SHEET 717R4 OF

ORIGINAL SCALE IN MILLIMETERS FOR REDUCED PLANS 0 10 20 30 40 50 60 70 80 90 100

Rev. Date: 5-18-98

SAN FRANCISCO OAKLAND BAY BRIDGE
EAST SPAN SEISMIC SAFETY PROJECT
SELF-ANCHORED SUSPENSION BRIDGE
(SUPERSTRUCTURE & TOWER)

TRAVELER AIR SYSTEM-01A

Caltrans Metric

DIST.	COUNTY	ROUTE	KILOMETER POST TOTAL PROJECT	SHEET NO.	TOTAL SHEETS
04	SF	80	13.2/13.9	1134R4	1204

REGISTERED ENGINEER - CIVIL

12-6-04
PLANS APPROVAL DATE

REGISTERED PROFESSIONAL ENGINEER Roupen Donikian No. M 20235 Exp. 09/30/06 MECHANICAL STATE OF CALIFORNIA

The State of California or its officers or agents shall not be responsible for the accuracy or completeness of electronic copies of this plan sheet.

T.Y. LIN / MOFFATT & NICHOL
825 BATTERY STREET
SAN FRANCISCO, CA 94111

Caltrans now has a web site! To get to the web site, go to: http://www.dot.ca.gov

USERNAME => DWinrow DATE PLOTTED => 23 AUG 2011 TIME PLOTTED => 13:49:29
100% PS&E
FILE => I:\bb\04-012001\sas\contract plans and cco\cco\cco#183\7-revision 08-23-11\dgn\aktrvl20a.dgn

DIST.	COUNTY	ROUTE	KILOMETER POST TOTAL PROJECT	SHEET NO.	TOTAL SHEETS
04	SF	80	13.2/13.9	1134SIR3	1204

Caltrans Metric

REGISTERED ENGINEER - CIVIL

06-19-09

PLANS APPROVAL DATE

REGISTERED PROFESSIONAL ENGINEER R. Henriksen No. M 029816 Exp. 06/30/12 MECHANICAL STATE OF CALIFORNIA

The State of California or its officers or agents shall not be responsible for the accuracy or completeness of electronic copies of this plan sheet.

T.Y. LIN / MOFFATT & NICHOL
825 BATTERY STREET
SAN FRANCISCO, CA 94111

Caltrans now has a web site! To get to the web site, go to: http://www.dot.ca.gov

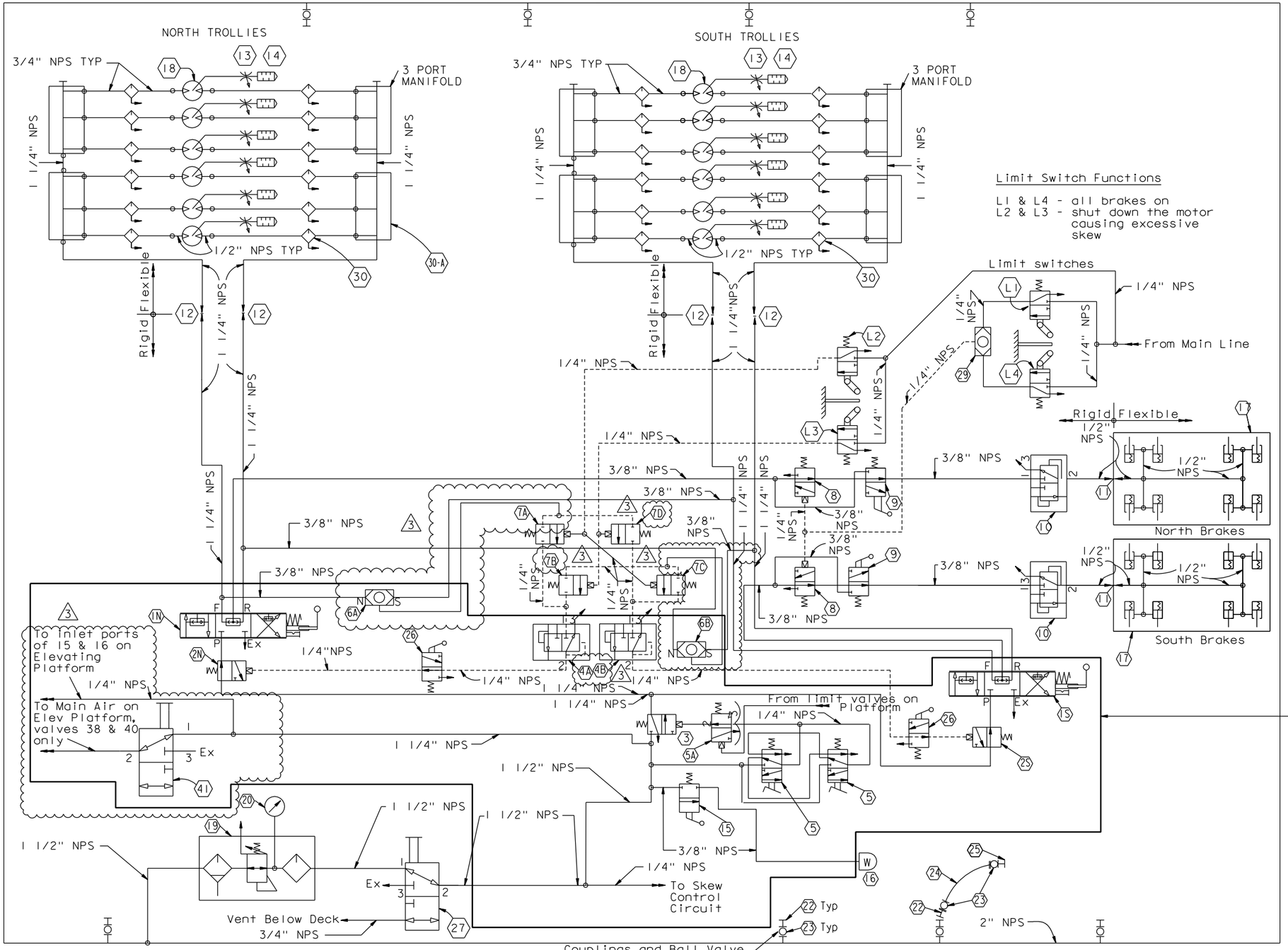

PNEUMATIC SCHEMATIC
TROLLIES AND BRAKES

NTS

LEGEND:

3 F - Forward direction "Travelling West"
R - Reverse direction "Travelling East"

All Items Contained within Boundary Line are Located in the Control Panel

NOTES:

1. For parts list see "Traveler Air System - 01A" sheet.
2. For notes regarding air system see "Traveler Air System - 02A" sheet.
3. For control panel details see "Traveler Control Panel Layout" sheet.

CONTRACT CHANGE ORDER NO. ____
SHEET ____ OF

REQUESTS FOR INFORMATION NOT ADDRESSED IN THIS CCO REMAIN IN FORCE

MARK	DATE	DESCRIPTIONS	BY	CH'D	CCO#
3	08/23/11	MISCELLANEOUS TRAVELER MODIFICATIONS	RH	AS	183
2	07/30/10	TRAVELER MODIFICATIONS	RH	TH	24SI
1	02/12/10	TRAVELER MODIFICATIONS	RH	TH	24SI
0	06/19/09	TRAVELER MODIFICATIONS	RH	TH	24SI

REVISIONS

R. Valizadeh/V. Toan/Y.L./W.L./F.C.
DESIGN OVERSIGHT
Roya Valizadeh / Vong Toan / Y. Liu
SIGN OFF DATE 08/23/11

DESIGN	BY R. Scott	CHECKED R. Henriksen	
DETAILS	BY Z. Istre	CHECKED J. Otter	
QUANTITIES	BY R. Scott	CHECKED T. Ho	

PREPARED FOR THE STATE OF CALIFORNIA DEPARTMENT OF TRANSPORTATION

ALL DIMENSIONS ARE IN MILLIMETERS UNLESS OTHERWISE SHOWN

R. Manzanarez
PROJECT ENGINEER

BRIDGE NO. 34-0006L/R
KILOMETER POST 13.2/13.9

SAN FRANCISCO OAKLAND BAY BRIDGE
EAST SPAN SEISMIC SAFETY PROJECT
SELF-ANCHORED SUSPENSION BRIDGE
(SUPERSTRUCTURE & TOWER)

TRAVELER AIR SYSTEM-01B

Rev. Date: 5-18-98

ORIGINAL SCALE IN MILLIMETERS FOR REDUCED PLANS 0 10 20 30 40 50 60 70 80 90 100

CU 04
EA 0120F1

DISREGARD PRINTS BEARING EARLIER REVISION DATES

REVISION DATES (PRELIMINARY STAGE ONLY) 06/19/09

SHEET 717SIR3 OF

FILE => I:\bb\04-01200I\sas\contract plans and cco\cco\cco#183\7-revision 08-23-11\dgn\aktrv120b.dgn

100% PS&E

USERNAME => DWinrow DATE PLOTTED => 23 AUG 2011 TIME PLOTTED => 13:50:38

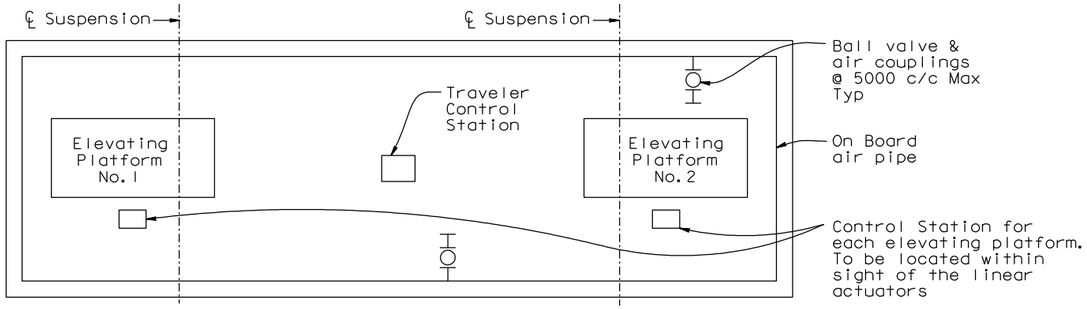

KEY PLAN SCHEMATIC

NOTES:

For location of Traveler Control Stations see Assembly sheets for each traveler

PARTS FOR ELEVATING PLATFORM CONTROL

	Part	Description	Size	Quantity/Traveler
5	L5-L6	Elevator Platform control Limit Valve	1/4"	1 or 2
	6C	Shuttle Valve: Will be actuated by either L5 or L6 as necessary.	1/4"	0 or 1
	31	Pressure Regulator set to limit pressure to 620 kPag (90 psig)	1 1/4"	1 or 2
4	31A	Pressure Regulator set to limit pressure to 485 kPag (70 psig)	3/4"	1 or 2
	32	Full flow throttle and reverse valve for the linear actuator air motors with built-in emergency stop button. Deadman operation. Use same valve type as is used for trolley throttles.	1 1/4"	1 or 2
	33	Linear Actuator Air Motor. Max air consumption 183 scfm per motor		1 or 2
	34	Exhaust Choke Throttling Valve	To suit motor port	1 or 2
	35	Silencer	To suit motor port	1 or 2
	36	Inline Lubricator: One Required at each air motor inlet.	3/4"	2 or 4
	37	NOT USED		
	38	Piloted Safety Valve to allow flow only when Pedal Valve 40 is actuated. - Poppet Valve	1 1/4"	1 or 2
	39	NOT USED		
	40	Pedal Control Valve, located at the Elevated Platform Control Station. Operation: 1. To lift Elevated Platform, Pedal must be held depressed while operating the Throttle Valve. (32)	1/4"	1 or 2
	41	3-Way Manual Diversion Ball Valve with Latch-Lock Lever and Nut to allow isolation of Elevating Platforms for maintenance or repair without having to shut down the other air systems on the Traveler	1 1/4"	1
5	42	3-Way Normally Open Palm Button Valve	1/4"	1

TRAVELER AIR SYSTEM NOTES:

1. All double check valves shall be installed horizontally.
2. All vents without silencers unless noted otherwise shall have a minimum of 300 mm of pipe and terminate with a screened downturned elbow.
3. Flexible hose (not to exceed 750 mm in length unless otherwise noted or shown) may be used for final connections to equipment.
4. All pipe sizes are typical for similar locations.
5. On board rigid pipe to be SCHED 40.
6. Provide support to 2" pipe within 150 mm of each pipe hose connection and at 1800 intervals maximum.
7. Provide downturned elbow and reducer as required at each equipment connection.
8. Provide sufficient flexible connection hose to accommodate traveler movement (12,000 mm length).
9. Mount throttle and whistle valves so as to be accessible by hand.
10. Mount main system pilot valves (Dead Man Switch) so as to be operated by foot.
11. Fabricator to design and provide a steel framed, plywood sheathed control console. Provide weather cover for all controls.
12. Traveler operating speed 6.1 m/min (20 fpm) fully loaded going up grade.
13. Anticipated trolley air consumption at full speed is 33 scfm per motorized trolley.
14. Pneumatic schematics illustrate the principles of the pneumatic systems. System manufacturer is to review pneumatic schematics; carry out detailed layout of the system; make any detailed modifications necessary to ensure the proper operation of the systems.
15. For functional description of components and other requirements, see specification.
16. Elevating platform drives and actuators are designed to operate with air pressure in the range from 490 to 690 kPa (70 to 100 psig). Provide pressure relief valves to avoid supply of excessive pressure to the drive motor so as to avoid excessive motor stall-out torque.
17. SAS EB & WB Travelers have 4 suspension systems (12 motors) and one elevating platform each.
18. E2/E3 EB & WB Travelers have 8 suspension systems (24 motors) & two elevating platforms each. These travelers change suspension systems when Hinge A is crossed.
19. Quick disconnects items 11 & 12 are only on the E2/E3 Travelers. SAS Travelers are to be piped with fixed connections.
20. Main system pilot valves (item (5)) - 1 required for operator facing east and 1 required for operator facing west.

Caltrans Metric

DIST.	COUNTY	ROUTE	KILOMETER POST TOTAL PROJECT	SHEET NO.	TOTAL SHEETS
04	SF	80	13.2/13.9	1135R5	1204

REGISTERED ENGINEER - CIVIL

12-19-08
PLANS APPROVAL DATE

REGISTERED PROFESSIONAL ENGINEER Roupen Donikian No. C 56519 Exp. 06/30/09 STATE OF CALIFORNIA

The State of California or its officers or agents shall not be responsible for the accuracy or completeness of electronic copies of this plan sheet.

T.Y. LIN / MOFFATT & NICHOL
825 BATTERY STREET
SAN FRANCISCO, CA 94111

Caltrans now has a web site! To get to the web site, go to: http://www.dot.ca.gov

REGISTERED PROFESSIONAL ENGINEER R. Henriksen No. M 029816 Exp. 06/30/12 MECHANICAL STATE OF CALIFORNIA

FOR REVISIONS ONLY

CONTRACT CHANGE ORDER NO. _____
SHEET ___ OF ___

REQUESTS FOR INFORMATION NOT ADDRESSED IN THIS CCO REMAIN IN FORCE

MARK	DATE	DESCRIPTIONS	BY	CH'D	CCO#
5	08/23/11	MISCELLANEOUS TRAVELER MODIFICATIONS	RH	AS	183
4	02/25/11	TRAVELER MODIFICATIONS	RH	AS	183
3	02/12/10	TRAVELER MODIFICATIONS	RH	AS	24S1
2	08/21/09	TRAVELER MODIFICATIONS	RH	AS	24S1
1	07/20/07	RAIL CHANGE & MISCELLANEOUS DETAILS	RD	NV	24

REVISIONS

R. Valizadeh/V. Toan/Y.L./W.L./F.C.
DESIGN OVERSIGHT
Roya Valizadeh / Vong Toan / Y. Liu
SIGN OFF DATE 08/23/11

	BY	CHECKED
DESIGN	R. Scott	R. Henriksen
DETAILS	Z. Istre	J. Otter
QUANTITIES	R. Scott	T. Ho

PREPARED FOR THE STATE OF CALIFORNIA DEPARTMENT OF TRANSPORTATION

ALL DIMENSIONS ARE IN MILLIMETERS UNLESS OTHERWISE SHOWN

R. Manzanarez
PROJECT ENGINEER

BRIDGE NO. 34-0006L/R
KILOMETER POST 13.2/13.9

SAN FRANCISCO OAKLAND BAY BRIDGE
EAST SPAN SEISMIC SAFETY PROJECT
SELF-ANCHORED SUSPENSION BRIDGE
(SUPERSTRUCTURE & TOWER)

TRAVELER AIR SYSTEM-02A

Rev. Date: 5-18-98

ORIGINAL SCALE IN MILLIMETERS FOR REDUCED PLANS 0 10 20 30 40 50 60 70 80 90 100

CU 04
EA 0120F1

DISREGARD PRINTS BEARING EARLIER REVISION DATES 12/19/08

REVISION DATES (PRELIMINARY STAGE ONLY)

SHEET 718R5 OF

FILE => I:\bb\04-012001\sas\contract plans and cco\cco\cco#183\7-revision 08-23-11\dgn\aktrv121a.dgn

USERNAME => DWinrow DATE PLOTTED => 23 AUG 2011 TIME PLOTTED => 13:51:26

100% PS&E

DIST.	COUNTY	ROUTE	KILOMETER POST TOTAL PROJECT	SHEET NO.	TOTAL SHEETS
04	SF	80	13.2/13.9	1135S1R3	1204

Caltrans Metric

REGISTERED ENGINEER - CIVIL
06-19-09
PLANS APPROVAL DATE

REGISTERED PROFESSIONAL ENGINEER R. Henriksen No. M 029816 Exp. 06/30/12 MECHANICAL STATE OF CALIFORNIA

The State of California or its officers or agents shall not be responsible for the accuracy or completeness of electronic copies of this plan sheet.

T.Y. LIN / MOFFATT & NICHOL
825 BATTERY STREET
SAN FRANCISCO, CA 94111

Caltrans now has a web site! To get to the web site, go to: http://www.dot.ca.gov

Safety Note - Platform Limit Switches

This circuit prevents movement of the traveler at any time except when the elevating platforms are fully down. In order to pass the pier with the SAS travelers (when elevating platform must be partially raised), personnel on the traveler platfrom must temporarily over-ride the elevating platform limit switch.

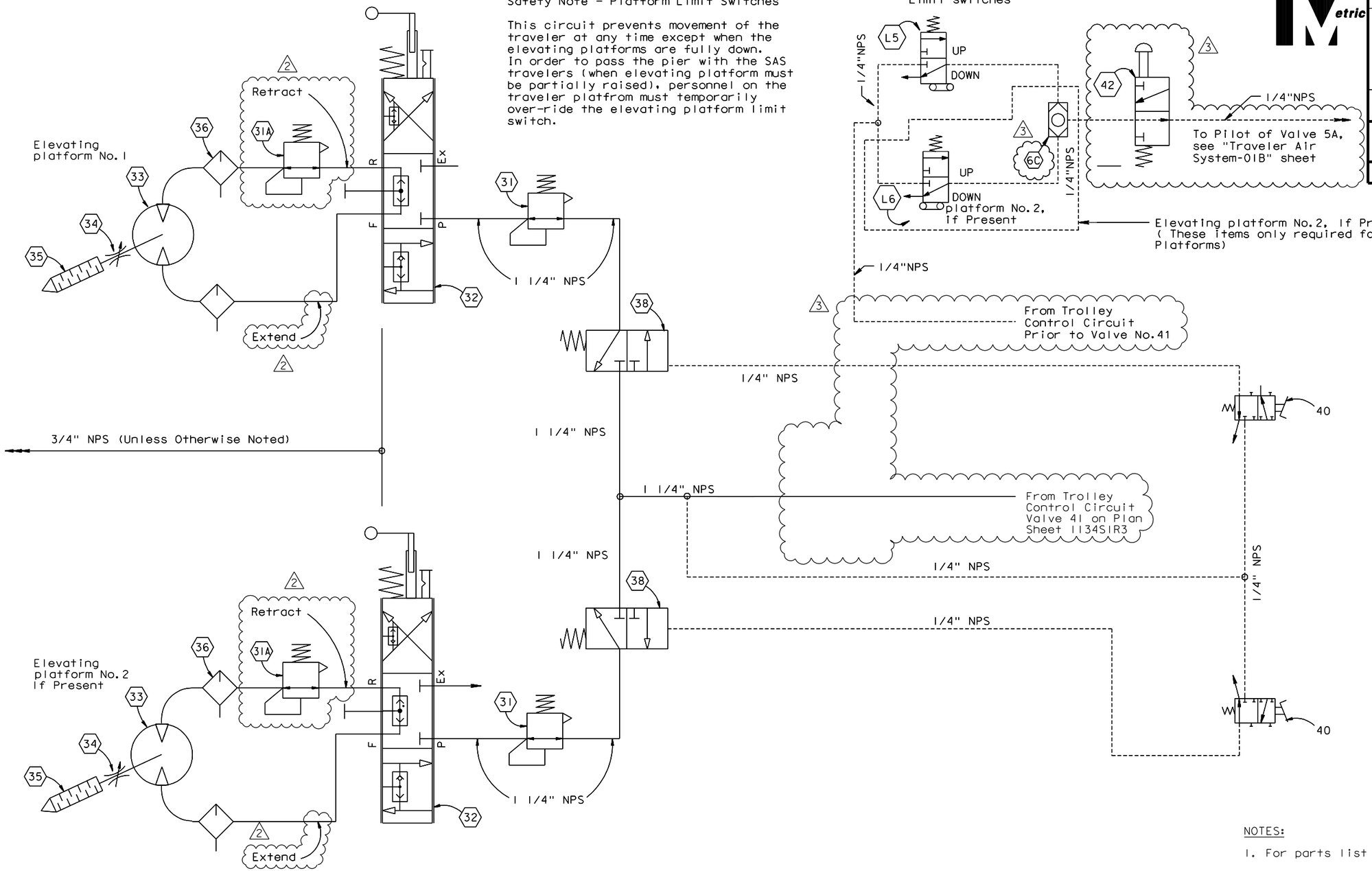

NOTES:

1. For parts list see "Traveler Air System - 02A" sheet.

CONTRACT CHANGE ORDER NO. _____
SHEET ____ OF ____

REQUESTS FOR INFORMATION NOT ADDRESSED IN THIS CCO REMAIN IN FORCE

ELEVATING PLATFORM PNEUMATIC SCHEMATIC

NTS

MARK	DATE	DESCRIPTIONS	BY	CH'D	CCO#
3	08/23/11	MISCELLANEOUS TRAVELER MODIFICATIONS	RH	AS	183
2	02/25/11	TRAVELER MODIFICATIONS	RH	TH	183
1	02/12/10	TRAVELER MODIFICATIONS	RH	TH	24S1
0	08/21/09	TRAVELER MODIFICATIONS	RH	TH	24S1

REVISIONS

R. Valizadeh/V. Toan/Y.L./W.L./F.C.
DESIGN OVERSIGHT
Roya Valizadeh / Vong Toan / Y. Liu
SIGN OFF DATE 08/23/11

	BY	CHECKED
DESIGN	R. Scott	R. Henriksen
DETAILS	Z. Istre	J. Otter
QUANTITIES	R. Scott	T. Ho

PREPARED FOR THE STATE OF CALIFORNIA DEPARTMENT OF TRANSPORTATION

ALL DIMENSIONS ARE IN MILLIMETERS UNLESS OTHERWISE SHOWN

R. Manzanarez
PROJECT ENGINEER

BRIDGE NO. 34-0006L/R
KILOMETER POST 13.2/13.9

SAN FRANCISCO OAKLAND BAY BRIDGE
EAST SPAN SEISMIC SAFETY PROJECT
SELF-ANCHORED SUSPENSION BRIDGE
(SUPERSTRUCTURE & TOWER)

TRAVELER AIR SYSTEM-02B

Rev. Date: 5-18-98

ORIGINAL SCALE IN MILLIMETERS FOR REDUCED PLANS 0 10 20 30 40 50 60 70 80 90 100

CU 04
EA 0120F1

DISREGARD PRINTS BEARING EARLIER REVISION DATES → 06/19/09

REVISION DATES (PRELIMINARY STAGE ONLY)

SHEET 718S1R3 OF

FILE => I:\bb\04-012001\sas\contract plans and cco\cco\cco#183\7-revision 08-23-11\dgn\aktrv121b.dgn

100% PS&E

USERNAME => DWinrow DATE PLOTTED => 23 AUG 2011 TIME PLOTTED => 13:53:55

DIST.	COUNTY	ROUTE	KILOMETER POST TOTAL PROJECT	SHEET NO.	TOTAL SHEETS
04	SF	80	13.2/13.9	1136R1	1204

Caltrans Metric

REGISTERED ENGINEER - MECHANICAL

12-6-04
PLANS APPROVAL DATE

REGISTERED PROFESSIONAL ENGINEER Roupen Donikian No. M 20235 Exp. 09/30/06 MECHANICAL STATE OF CALIFORNIA

The State of California or its officers or agents shall not be responsible for the accuracy or completeness of electronic copies of this plan sheet.

T.Y. LIN / MOFFATT & NICHOL
825 BATTERY STREET
SAN FRANCISCO, CA 94111

Caltrans now has a web site! To get to the web site, go to: http://www.dot.ca.gov

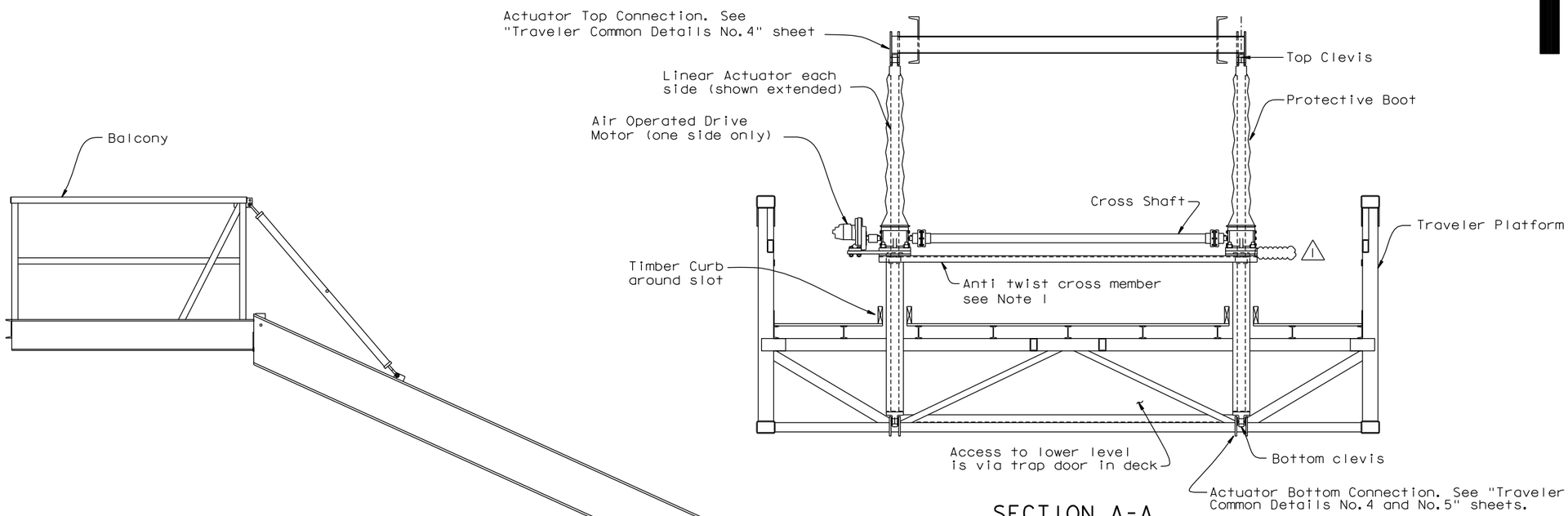

SECTION A-A
1:20

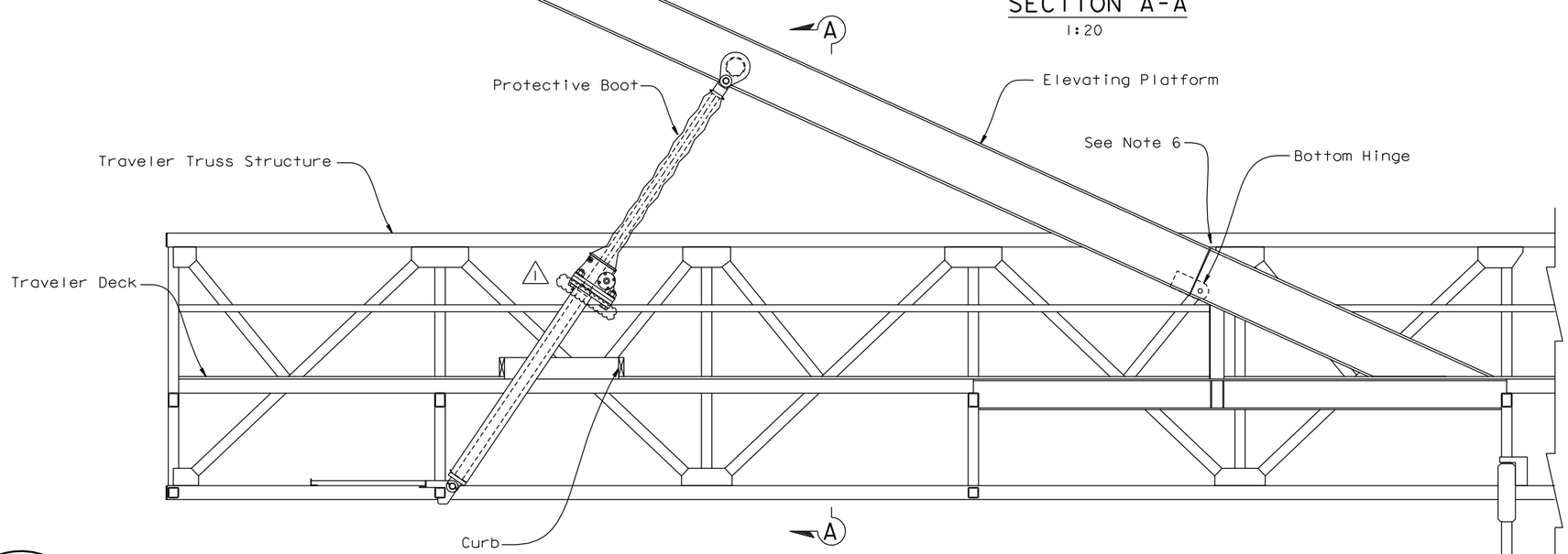

LINEAR ACTUATOR ASSEMBLY (SHOWN ON THE SAS EB TRAVELER)
1:20

NOTES:

1. The anti-twist cross member with M30 Actuator is C 150x16. With M50 Actuator it is C 230x20.
2. For Actuator notes, see "Linear Actuators And Drives - 02" sheet.
3. For Actuator details, see Linear Actuators And Drives - 03" sheet.
4. For Actuator drives, see "Linear Actuators And Drives - 04" sheet.
5. Fabricator to verify all actuator lengths, actuator attachment positions, actuator travel requirements etc.
6. Actuator lengths & travels to be such that actuator reaches full extension & is arrested before the gap at the hinge closes tight.

REGISTERED PROFESSIONAL ENGINEER James P. Duxbury No. C 64677 Exp. 06/30/11 CIVIL STATE OF CALIFORNIA

FOR REVISIONS ONLY

CONTRACT CHANGE ORDER NO. ____
SHEET ___ OF ___

REQUESTS FOR INFORMATION NOT ADDRESSED IN THIS CCO REMAIN IN FORCE

ALL DIMENSIONS ARE IN MILLIMETERS UNLESS OTHERWISE SHOWN

R. Valizadeh/V. Toan/Y.L./W.L./F.C.
DESIGN OVERSIGHT
SIGN OFF DATE 02/25/11

MARK	DATE	DESCRIPTIONS	BY	CH'D	CCO#
1	02/25/11	TRAVELER MODIFICATIONS	AS	JD	183

REVISIONS

	BY	CHECKED
DESIGN	J. Otter	R. Donikian
DETAILS	J. Otter	R. Donikian
QUANTITIES	J. Otter	M. Roberts

PREPARED FOR THE STATE OF CALIFORNIA DEPARTMENT OF TRANSPORTATION

R. Manzanarez
PROJECT ENGINEER

BRIDGE NO. 34-0006L/R
KILOMETER POST 13.2/13.9

SAN FRANCISCO OAKLAND BAY BRIDGE
EAST SPAN SEISMIC SAFETY PROJECT
SELF-ANCHORED SUSPENSION BRIDGE
(SUPERSTRUCTURE & TOWER)

LINEAR ACTUATORS AND DRIVES-01

Rev. Date: 5-18-98

ORIGINAL SCALE IN MILLIMETERS FOR REDUCED PLANS 0 10 20 30 40 50 60 70 80 90 100

CU 04
EA 0120F1

DISREGARD PRINTS BEARING EARLIER REVISION DATES → 04/15/02 01/04/02 12/19/02

SHEET 719R1 OF

FILE => I:\bb\04-012001\sas\contract plans and cco\cco\cco#183\4-revision 02-25-11\dgn\aktrv122.dgn

USERNAME => DWinrow DATE PLOTTED => 25 FEB 2011 TIME PLOTTED => 11:55:09

100% PS&E

DIST.	COUNTY	ROUTE	KILOMETER POST TOTAL PROJECT	SHEET NO.	TOTAL SHEETS
04	SF	80	13.2/13.9	1137R1	1204

Caltrans Metric

REGISTERED ENGINEER - MECHANICAL

12-6-04
PLANS APPROVAL DATE

REGISTERED PROFESSIONAL ENGINEER Roupen Donikian No. M 20235 Exp. 09/30/06 MECHANICAL STATE OF CALIFORNIA

The State of California or its officers or agents shall not be responsible for the accuracy or completeness of electronic copies of this plan sheet.

T.Y. LIN / MOFFATT & NICHOL
825 BATTERY STREET
SAN FRANCISCO, CA 94111

Caltrans now has a web site! To get to the web site, go to: http://www.dot.ca.gov

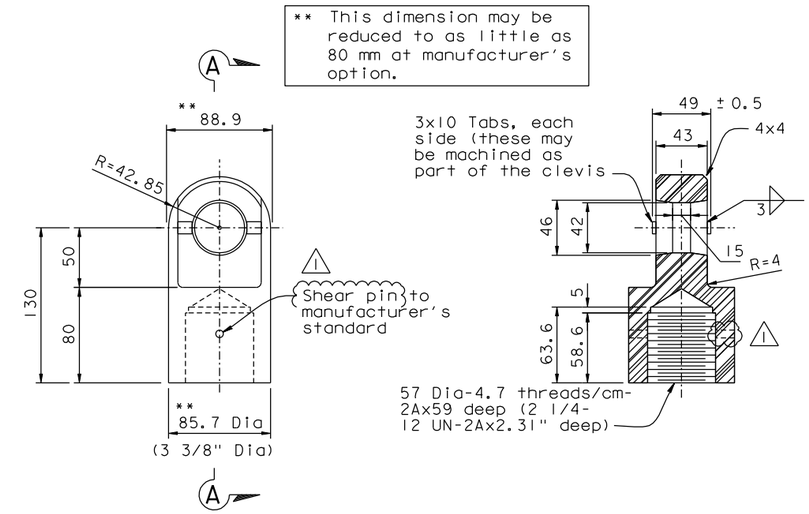

ELEVATION SECTION A-A

TOP CLEVIS

1:2.5

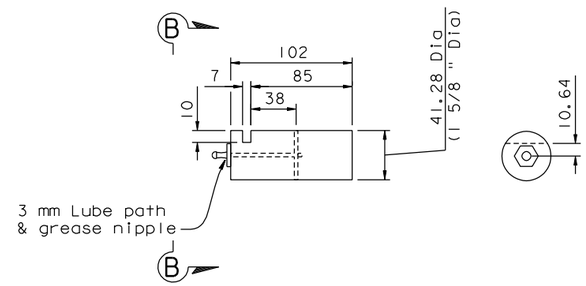

ELEVATION SECTION B-B

ACTUATOR PIN

1:2.5

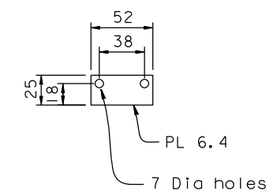

PIN RETENTION PLATE

1:2.5

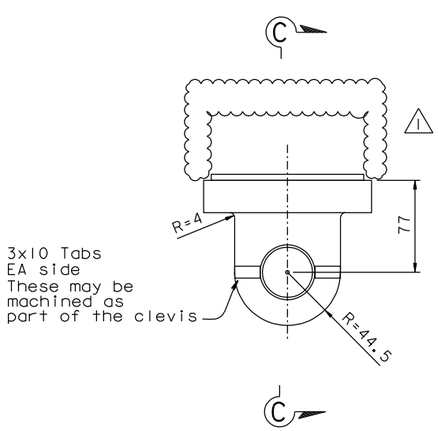

ELEVATION

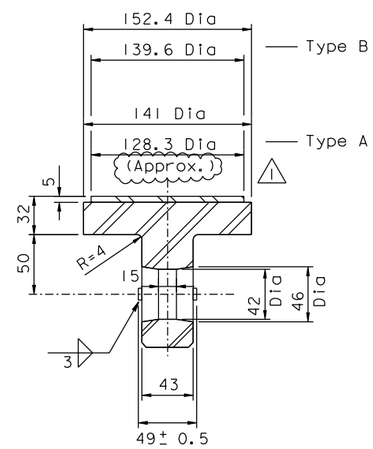

SECTION C-C

BOTTOM CLEVIS

1:2.5

LINEAR ACTUATOR NOTES:

1. Load screw to bottom out at bottom clevis to prevent excessive retraction.
2. Stop nut to contact stop plate to prevent excessive extension and to prevent the hinge from closing tight.
3. Lifted Loads given are service loads.
4. Min Structural Factor of Safety required = 5.0 on all loads.
   Min Mechanical Factor of Safety required = 6.0 on all loads.
5. Materials:
   - Load Screw - Steel stock to Manufacturer's standards.
   - Pipe - Mechanical tube, Min Fy=300 MPa
   - Bottom clevis, Top clevis, Shaft retention plate Min Fy=285 MPa
   - Pin - ASTM A572 Grade 50.
   - Welding Electrodes - to be appropriate to the material used. Manufacturer to propose specific materials for each element.
   - Boots to be Neoprene coated nylon with Vulca Seal process complete with air breathers as supplied by Unilift or approved equivalent.
   - Bolts - SAE Grade 8.
6. All exterior surfaces of static steel elements to be provided with Marine grade epoxy coating as per specifications.
7. All bolts, load screws, worm shafts & protruding shafts to be electroless (Nickel-Tungsten -Boron) plated to a thickness of 0.001 inch
8. For purposes of completing the design of ancillary elements, the actuators selected are Unilift Models M30 and M50 screw jack actuators as manufactured by Templeton, Kenly & Co. Inc. Alternative actuators of equivalent performance and quality are permitted. Closed length and travel are not to be altered. Radious of gyration of the load screw is not to be reduced.
9. Threads on load screws to be Stub Acme pattern with a pitch of 0.6 threads per cm (1.5 threads per inch). Do not increase depth of thread cut.
10. Note that the drive motors have limited torque capability and will stall out before the service load capacity of the unit is reached.
11. For drive motors and mounts see "Linear Actuators And Drives - 04" sheet.
12. Manufacturer is to set up the stop nuts in paired actuators (ie. the two actuators on a single elevating platform) such that they will contact & stop travel within 1 mm of each other.
13. Actuators to be fabricated to the tolerance shown.

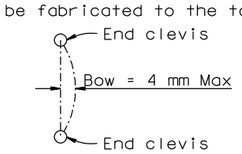

REGISTERED PROFESSIONAL ENGINEER James P.Duxbury No. C 64677 Exp. 06/30/11 CIVIL STATE OF CALIFORNIA

FOR REVISIONS ONLY

CONTRACT CHANGE ORDER NO. ____
SHEET ___ OF ___

REQUESTS FOR INFORMATION NOT ADDRESSED IN THIS CCO REMAIN IN FORCE

ALL DIMENSIONS ARE IN MILLIMETERS UNLESS OTHERWISE SHOWN

R. Valizadeh/V. Toan/Y.L./W.L./F.C.
DESIGN OVERSIGHT
Reza Valizadeh / Vong Toan / Y. Liu
SIGN OFF DATE 02/25/11

MARK	DATE	DESCRIPTIONS	BY	CH'D	CCO#
1	02/25/11	TRAVELER MODIFICATIONS	AS	JD	183

REVISIONS

	BY	CHECKED
DESIGN	J. Otter	R. Donikian
DETAILS	J. Otter	R. Donikian
QUANTITIES	J. Otter	M. Roberts

PREPARED FOR THE STATE OF CALIFORNIA DEPARTMENT OF TRANSPORTATION

R. Manzanarez
PROJECT ENGINEER

BRIDGE NO. 34-0006L/R
KILOMETER POST 13.2/13.9

SAN FRANCISCO OAKLAND BAY BRIDGE
EAST SPAN SEISMIC SAFETY PROJECT
SELF-ANCHORED SUSPENSION BRIDGE
(SUPERSTRUCTURE & TOWER)

LINEAR ACTUATORS AND DRIVES-02

Rev. Date: 5-18-98

ORIGINAL SCALE IN MILLIMETERS FOR REDUCED PLANS 0 10 20 30 40 50 60 70 80 90 100

CU 04
EA 0120F1

DISREGARD PRINTS BEARING EARLIER REVISION DATES

REVISION DATES (PRELIMINARY STAGE ONLY) 04/08/02 01/01/02 12/19/02

SHEET 720R1 OF

FILE => I:\bb\04-012001\sas\contract plans and cco\cco\cco#183\4-revision 02-25-11\dgn\aktrv123.dgn

USERNAME => DWinrow DATE PLOTTED => 25 FEB 2011 TIME PLOTTED => 11:55:48

DIST.	COUNTY	ROUTE	KILOMETER POST TOTAL PROJECT	SHEET NO.	TOTAL SHEETS
04	SF	80	13.2/13.9	1138R1	1204

Caltrans Metric

REGISTERED ENGINEER - MECHANICAL

12-6-04
PLANS APPROVAL DATE

REGISTERED PROFESSIONAL ENGINEER Roupen Donikian No. M 20235 Exp. 09/30/06 MECHANICAL STATE OF CALIFORNIA

The State of California or its officers or agents shall not be responsible for the accuracy or completeness of electronic copies of this plan sheet.

T.Y. LIN / MOFFATT & NICHOL
825 BATTERY STREET
SAN FRANCISCO, CA 94111

Caltrans now has a web site! To get to the web site, go to: http://www.dot.ca.gov

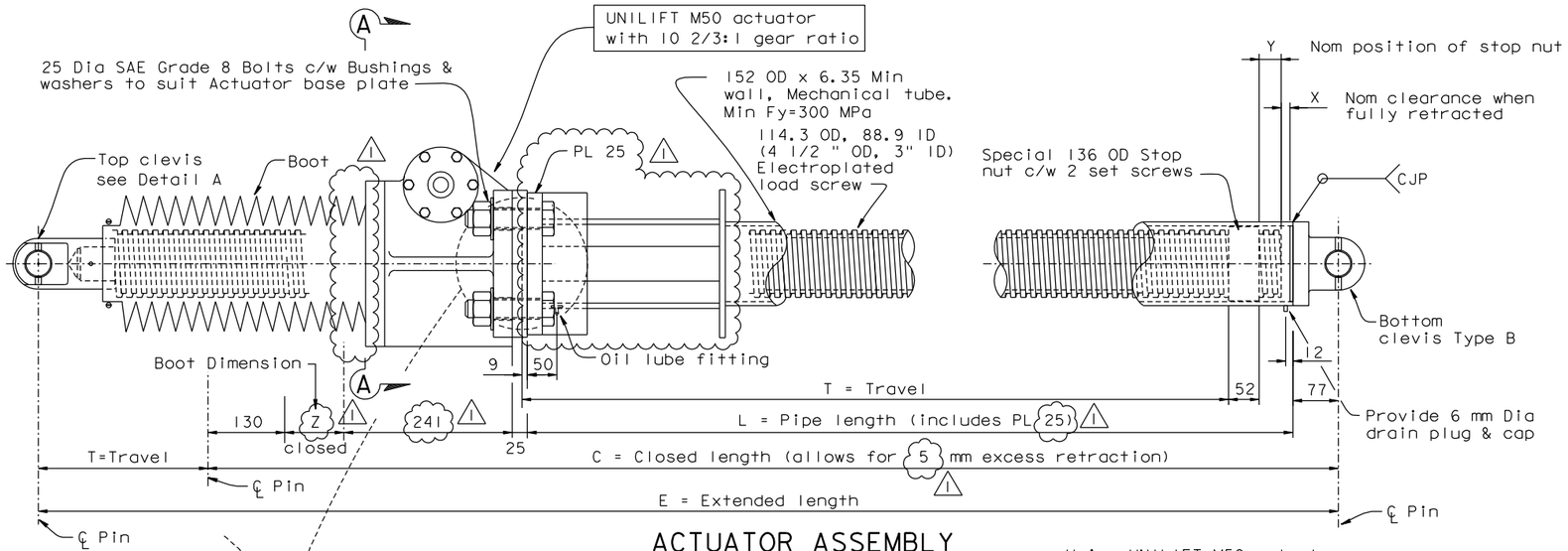

ACTUATOR ASSEMBLY
ACT - 03, - 04, - 05 & - 06

1:5

Using UNILIFT M50 actuator with 10 2/3:1 gear ratio

Location	Actuator Type	T	C	E	L	X	Y	Z	Lifted loads kN DL	Lifted loads kN LL	Nom lift speed mm/min
SAS-EB	ACT-01 (M30)	1397.5	2182	3579.5	1610	0	164.5	130	20	24	630
SAS-WB	ACT-02 (M30)	1323	2112	3435	1540	0	169	130	20	24	630
E2/E3-EB N	ACT-04 (M50)	1722	2563	4285	1935	0	165	155	25	30	400
E2/E3-EB S	ACT-05 (M50)	1642	2397	4039	1769	0	79	155	25	30	400
E2/E3-WB N	ACT-06 (M50)	1756	2826	4582	2198	0	394	155	25	30	400
E2/E3-WB S	ACT-03 (M50)	1471	2307	3778	1679	0	160	155	20	24	630

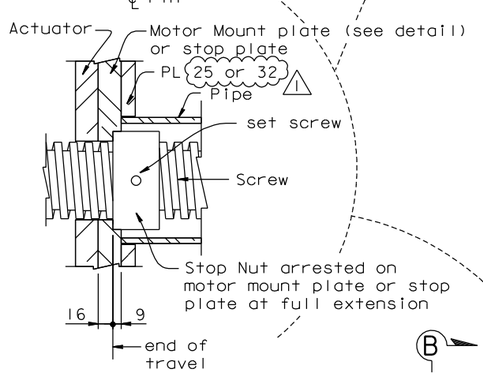

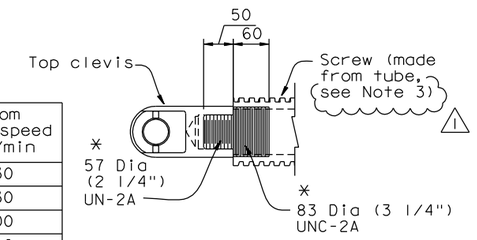

* Machine from 102 Dia round Fy=285 Min

DETAIL A

1:5

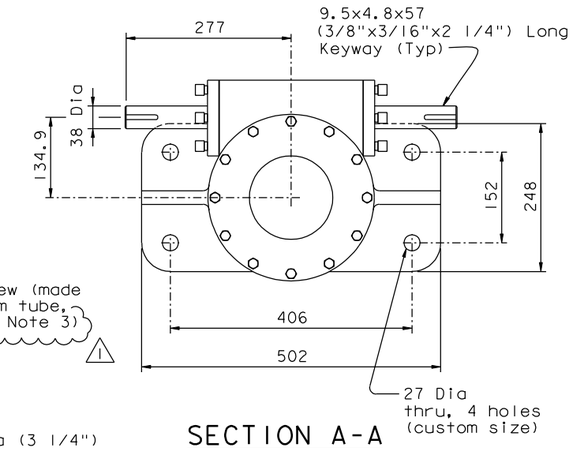

SECTION A-A

1:5

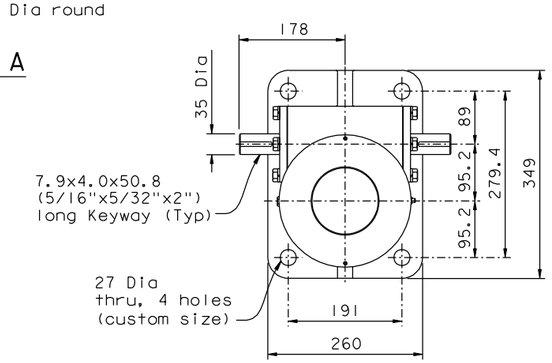

SECTION B-B

1:5

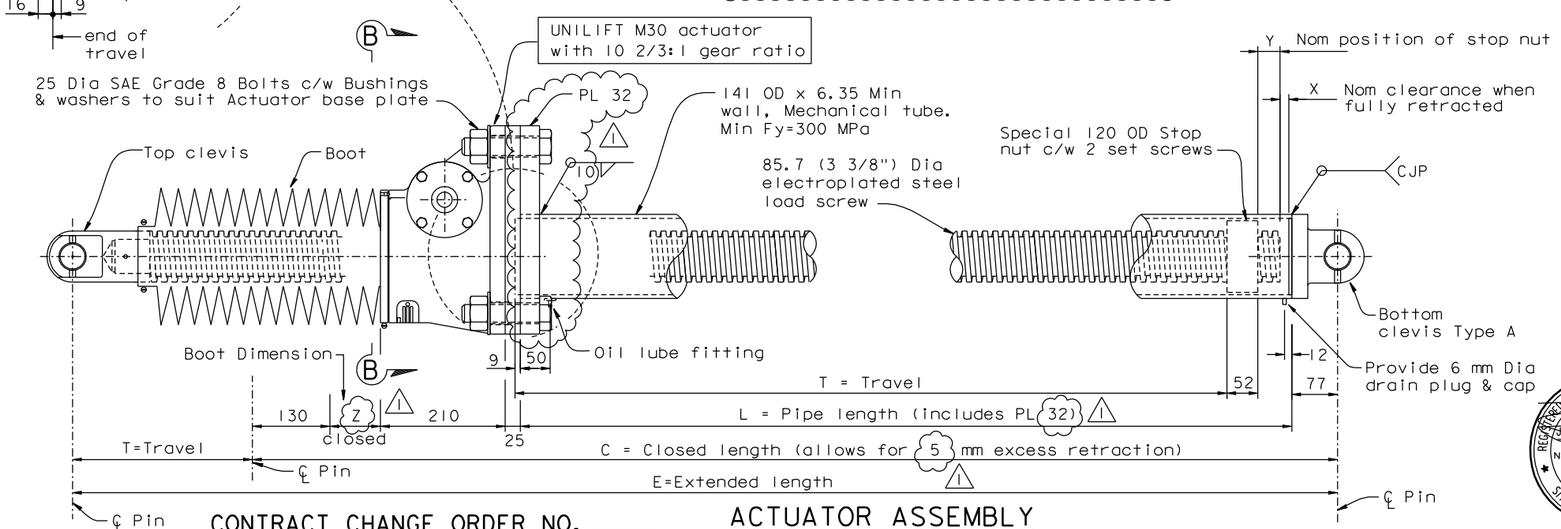

ACTUATOR ASSEMBLY
ACT - 01 & - 02

1:5

Using UNILIFT M30 actuator with 10 2/3:1 gear ratio

REGISTERED PROFESSIONAL ENGINEER James P.Duxbury No. C 64677 Exp. 06/30/11 CIVIL STATE OF CALIFORNIA

FOR REVISIONS ONLY

ALL DIMENSIONS ARE IN MILLIMETERS UNLESS OTHERWISE SHOWN

NOTES:

1. Manufacturer may supply sleeves & washer plates in lieu of custom hole sizes.
2. For details not shown, see "Linear Actuators And Drives -01, -02 & -04" sheets.
3. Manufacturer may supply solid screw in lieu of tube.

CONTRACT CHANGE ORDER NO. _____
SHEET ____ OF ____

REQUESTS FOR INFORMATION NOT ADDRESSED IN THIS CCO REMAIN IN FORCE

R. Valizadeh/V. Toan/Y.L./W.L./F.C.
DESIGN OVERSIGHT
Ryan Valizadeh / Vong Toan / Y. Liu
SIGN OFF DATE 03/14/11

MARK	DATE	DESCRIPTIONS	BY	CH'D	CCO#
1	03/14/11	TRAVELER MODIFICATIONS	AS	JD	183

REVISIONS

	BY	CHECKED
DESIGN	J. Otter	R. Donikian
DETAILS	J. Otter	R. Donikian
QUANTITIES	J. Otter	M. Roberts

PREPARED FOR THE STATE OF CALIFORNIA DEPARTMENT OF TRANSPORTATION

R. Manzanarez
PROJECT ENGINEER

BRIDGE NO. 34-0006L/R
KILOMETER POST 13.2/13.9

SAN FRANCISCO OAKLAND BAY BRIDGE
EAST SPAN SEISMIC SAFETY PROJECT
SELF-ANCHORED SUSPENSION BRIDGE
(SUPERSTRUCTURE & TOWER)

LINEAR ACTUATORS AND DRIVES-03

Rev. Date: 5-18-98

ORIGINAL SCALE IN MILLIMETERS FOR REDUCED PLANS 0 10 20 30 40 50 60 70 80 90 100

CU 04
EA 0120F1

DISREGARD PRINTS BEARING EARLIER REVISION DATES 04/18/02 01/04/02 12/19/02

SHEET 721R1 OF

FILE => I:\bb\04-012001\sas\contract plans and cco\cco\cco#183\6-update 03-14-11\dgn\aktrv124.dgn

USERNAME => arivera DATE PLOTTED => 11 MAR 2011 TIME PLOTTED => 15:09:38

100 % PS&E

DIST.	COUNTY	ROUTE	KILOMETER POST TOTAL PROJECT	SHEET NO.	TOTAL SHEETS
04	SF	80	13.2/13.9	1139R1	1204

Caltrans Metric

REGISTERED ENGINEER - MECHANICAL

12-6-04
PLANS APPROVAL DATE

REGISTERED PROFESSIONAL ENGINEER Roupen Donikian No. M 20235 Exp. 09/30/06 MECHANICAL STATE OF CALIFORNIA

The State of California or its officers or agents shall not be responsible for the accuracy or completeness of electronic copies of this plan sheet.

T.Y. LIN / MOFFATT & NICHOL
825 BATTERY STREET
SAN FRANCISCO, CA 94111

Caltrans now has a web site! To get to the web site, go to: http://www.dot.ca.gov

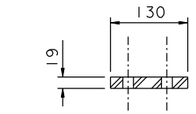

SECTION A-A

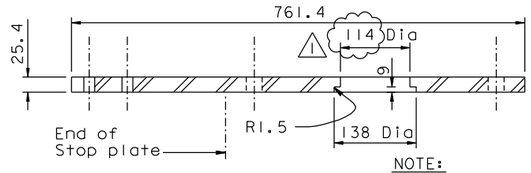

SECTION B-B

NOTE:
Adjust plate & bolt dimensions to suit actual Actuators & Drive motors chosen.

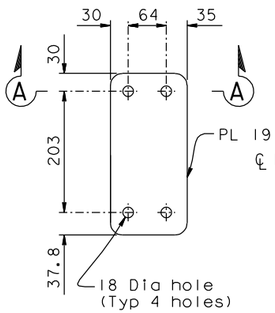

PLAN

SHIM PLATE

1:5

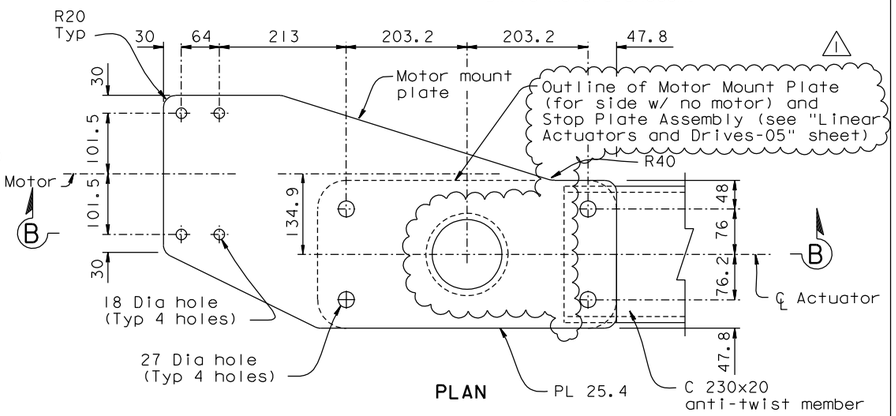

PLAN

MOTOR MOUNT & STOP PLATE

1:5

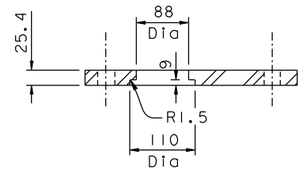

SECTION C-C

NOTE:
Adjust plate & bolt hole dimensions to suit actual Actuators & Drive Motors chosen.

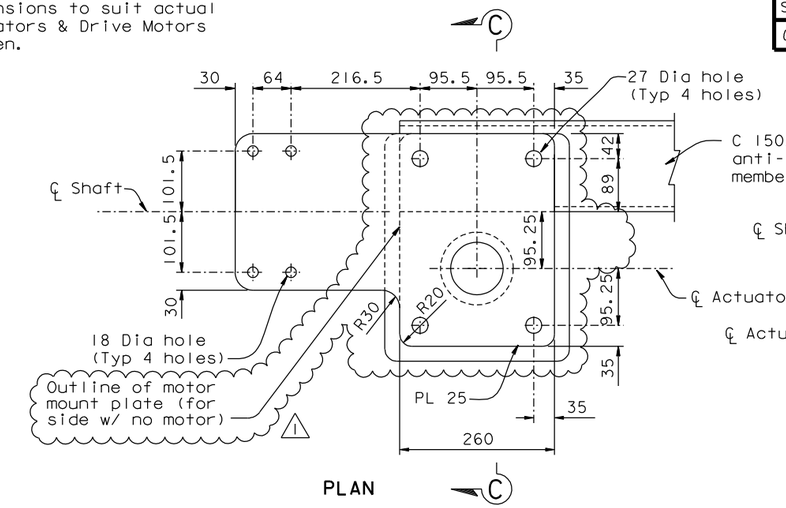

PLAN

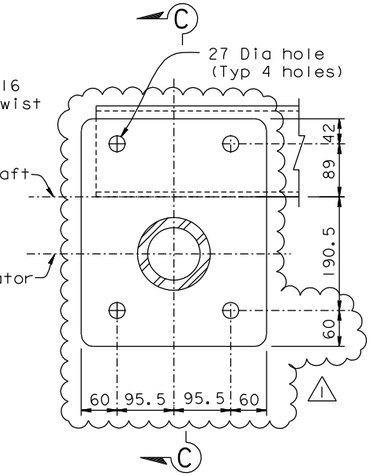

STOP PLATE

1:5

MOTOR MOUNT PLATE

1:5

Flexible jaw coupling
Max angular offset - 1 degree
Max parallel offset - 0.4 mm
Torque rating 300 N-m
Lovejoy L150 or equivalent

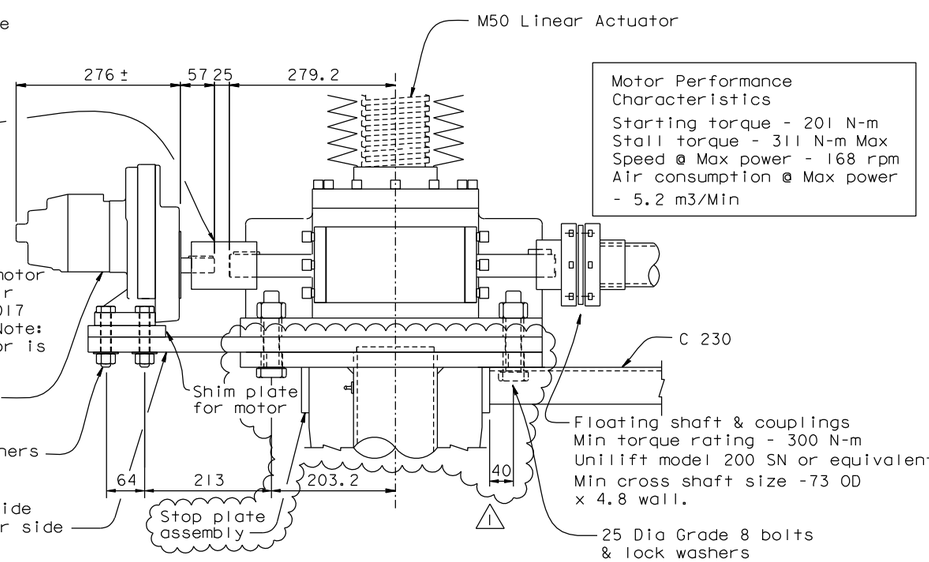

Motor Performance Characteristics
Starting torque - 201 N-m
Stall torque - 311 N-m Max
Speed @ Max power - 168 rpm
Air consumption @ Max power - 5.2 m3/Min

ACTUATOR DRIVE FOR M50 ACTUATOR

1:5

Flexible jaw coupling
Max angular offset - 1 degree
Max parallel offset - 0.4 mm
Torque rating 200 N-m
Lovejoy L110 or equivalent

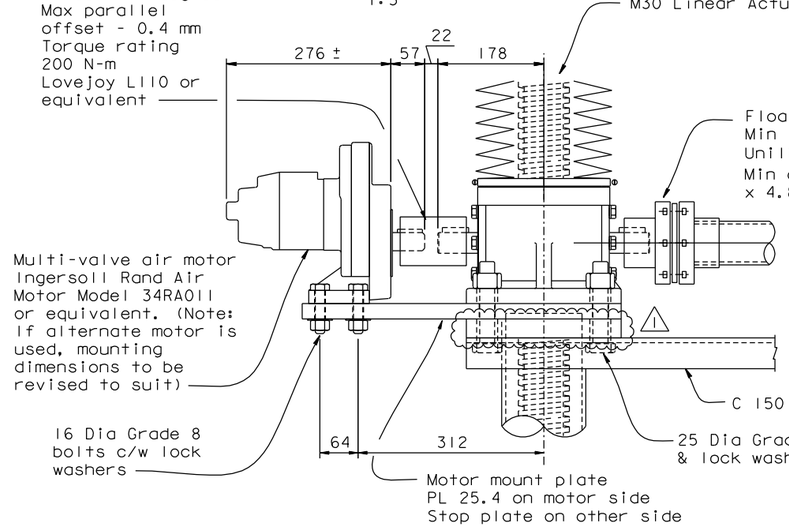

Motor Performance Characteristics
Starting torque - 133 N-m
Stall torque - 206 N-m Max
Speed @ Max power - 255 rpm
Air consumption @ Max power - 5.2 m3/Min

ACTUATOR DRIVE FOR M30 ACTUATOR

1:5

ALL DIMENSIONS ARE IN MILLIMETERS UNLESS OTHERWISE SHOWN

REGISTERED PROFESSIONAL ENGINEER James P. Duxbury No. C 64677 Exp. 06/30/11 CIVIL STATE OF CALIFORNIA

FOR REVISIONS ONLY

CONTRACT CHANGE ORDER NO. _____
SHEET ____ OF ____

REQUESTS FOR INFORMATION NOT ADDRESSED IN THIS CCO REMAIN IN FORCE

R. Valizadeh/V. Toan/Y.L./W.L./F.C.
DESIGN OVERSIGHT
SIGN OFF DATE 02/25/11

MARK	DATE	DESCRIPTIONS	BY	CH'D	CCO#
1	02/25/11	TRAVELER MODIFICATIONS	AS	JD	183

REVISIONS

	BY	CHECKED
DESIGN	J. Otter	R. Donikian
DETAILS	J. Otter	R. Donikian
QUANTITIES	J. Otter	M. Roberts

PREPARED FOR THE STATE OF CALIFORNIA DEPARTMENT OF TRANSPORTATION

R. Manzanarez
PROJECT ENGINEER

BRIDGE NO. 34-0006L/R
KILOMETER POST 13.2/13.9

SAN FRANCISCO OAKLAND BAY BRIDGE
EAST SPAN SEISMIC SAFETY PROJECT
SELF-ANCHORED SUSPENSION BRIDGE
(SUPERSTRUCTURE & TOWER)

LINEAR ACTUATORS AND DRIVES-04

Rev. Date: 5-18-98

ORIGINAL SCALE IN MILLIMETERS FOR REDUCED PLANS 0 10 20 30 40 50 60 70 80 90 100

CU 04
EA 0120F1

DISREGARD PRINTS BEARING EARLIER REVISION DATES

REVISION DATES (PRELIMINARY STAGE ONLY) 04/15/02 07/09/02 12/19/02

SHEET 722R1 OF

FILE => I:\bb\04-012001\sas\contract plans and cco\cco\cco#183\4-revision 02-25-11\dgn\aktrv125.dgn

100 % PS&E

USERNAME => DWinrow DATE PLOTTED => 25 FEB 2011 TIME PLOTTED => 12:07:02

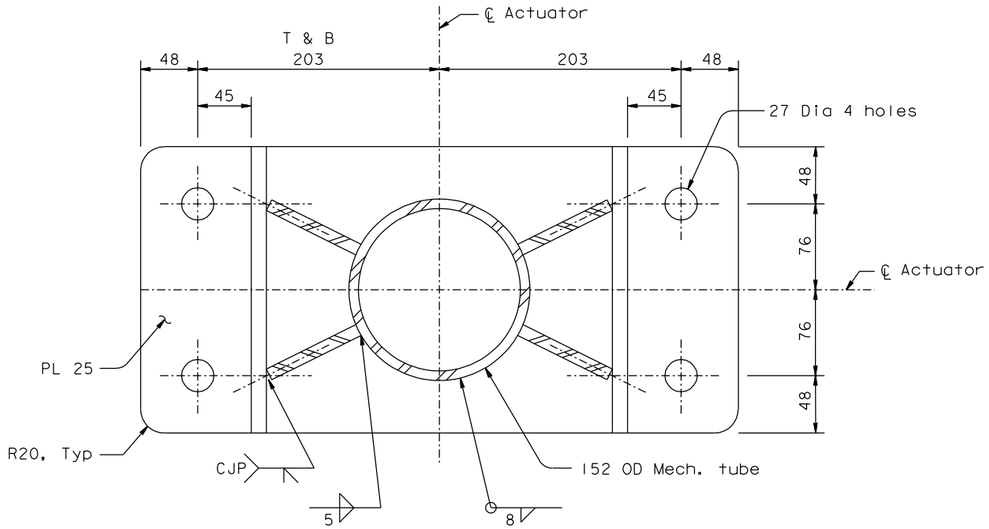

SECTION A-A

1:2.5

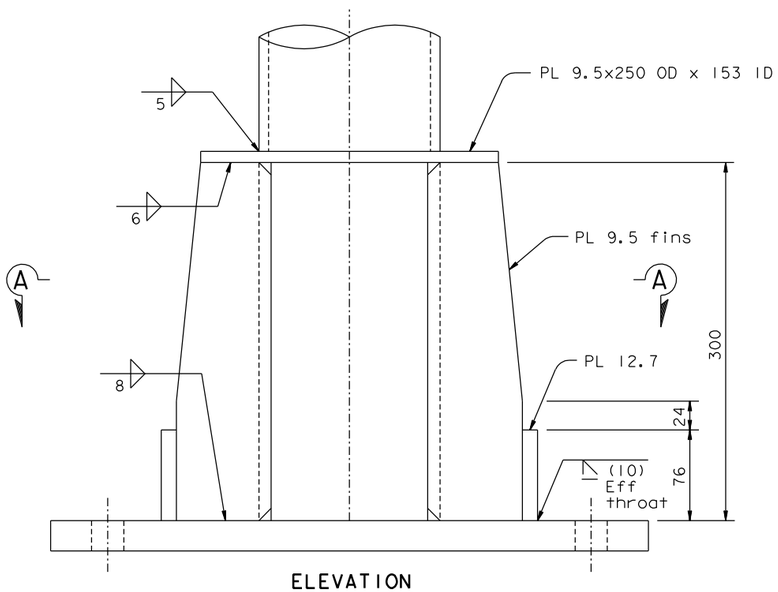

ELEVATION

STOP PLATE ASSEMBLY
@ M50 ACTUATORS

1:2.5

CONTRACT CHANGE ORDER NO. _____
SHEET ____ OF ____

REQUESTS FOR INFORMATION NOT ADDRESSED IN THIS CCO REMAIN IN FORCE

ALL DIMENSIONS ARE IN MILLIMETERS UNLESS OTHERWISE SHOWN

DIST.	COUNTY	ROUTE	KILOMETER POST TOTAL PROJECT	SHEET NO.	TOTAL SHEETS
04	SF	80	13.2/13.9	1139S1	1204

REGISTERED ENGINEER - CIVIL

02-25-11
PLANS APPROVAL DATE

REGISTERED PROFESSIONAL ENGINEER James P.Duxbury No. C 64677 Exp. 06/30/11 CIVIL STATE OF CALIFORNIA

The State of California or its officers or agents shall not be responsible for the accuracy or completeness of electronic copies of this plan sheet.

T.Y. LIN / MOFFATT & NICHOL
825 BATTERY STREET
SAN FRANCISCO, CA 94111

Caltrans now has a web site! To get to the web site, go to: http://www.dot.ca.gov

Caltrans Metric

R. Valizadeh/V. Toan/Y.L./W.L./F.C.
DESIGN OVERSIGHT
Ryan Valizadeh / Vong Toan / Y. Liu
SIGN OFF DATE 02/25/11

MARK	DATE	DESCRIPTIONS	BY	CH'D	CCO#
0	02/25/11	TRAVELER MODIFICATIONS	AS	JD	183

REVISIONS

	BY		CHECKED
DESIGN	A. Sanjines		J. Duxbury
DETAILS	A. Sanjines		J. Duxbury
QUANTITIES	A. Sanjines		J. Duxbury

PREPARED FOR THE STATE OF CALIFORNIA DEPARTMENT OF TRANSPORTATION

R. Manzanarez
PROJECT ENGINEER

BRIDGE NO. 34-0006L/R
KILOMETER POST 13.2/13.9

SAN FRANCISCO OAKLAND BAY BRIDGE
EAST SPAN SEISMIC SAFETY PROJECT
SELF-ANCHORED SUSPENSION BRIDGE
(SUPERSTRUCTURE & TOWER)

LINEAR ACTUATORS AND DRIVES-05

Rev. Date: 5-18-98

ORIGINAL SCALE IN MILLIMETERS FOR REDUCED PLANS 0 10 20 30 40 50 60 70 80 90 100

CU 04
EA 0120F1

DISREGARD PRINTS BEARING EARLIER REVISION DATES 02/25/11

REVISION DATES (PRELIMINARY STAGE ONLY)

SHEET 722S1 OF

100 % PS&E

USERNAME => DWinrow DATE PLOTTED => 25 FEB 2011 TIME PLOTTED => 12:04:53

FILE => I:\bb\04-012001\sas\contract plans and cco\cco\cco#183\4-revision 02-25-11\dgn\aktrv124a.dgn

DIST.	COUNTY	ROUTE	KILOMETER POST TOTAL PROJECT	SHEET NO.	TOTAL SHEETS
04	SF	80	13.2/13.9	1160R3	1204

REGISTERED ENGINEER - MECHANICAL

12-6-04

PLANS APPROVAL DATE

The State of California or its officers or agents shall not be responsible for the accuracy or completeness of electronic copies of this plan sheet.

REGISTERED PROFESSIONAL ENGINEER Roupen Donikian No. C 56519 Exp. 06/30/09 CIVIL STATE OF CALIFORNIA

T.Y. LIN / MOFFATT & NICHOL
825 BATTERY STREET
SAN FRANCISCO, CA 94111

Caltrans now has a web site! To get to the web site, go to: http://www.dot.ca.gov

Caltrans Metric

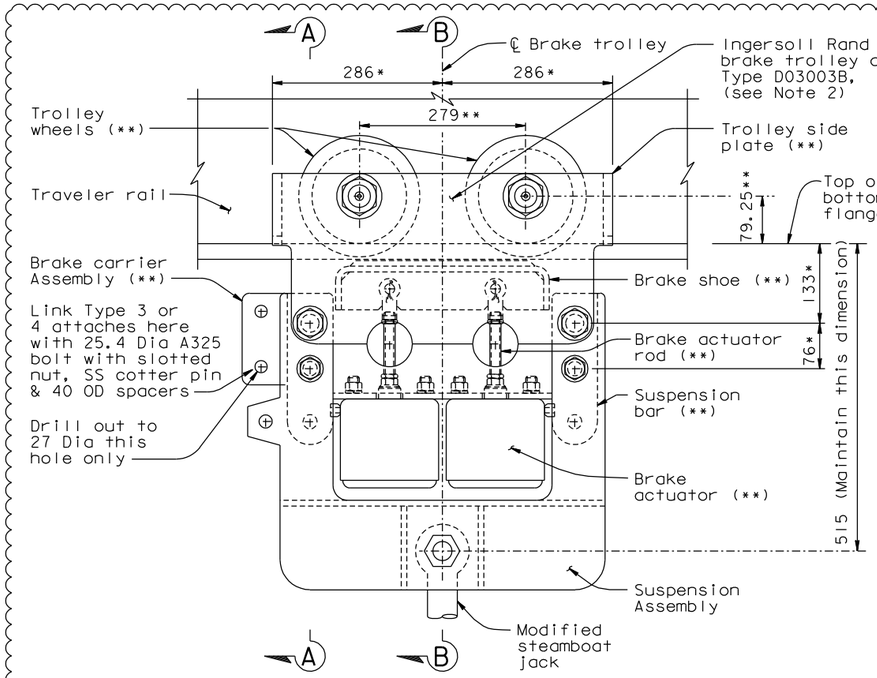

BRAKE TROLLEY ELEVATION (4 Required)

1:5 *See Note 3 **See Note 4

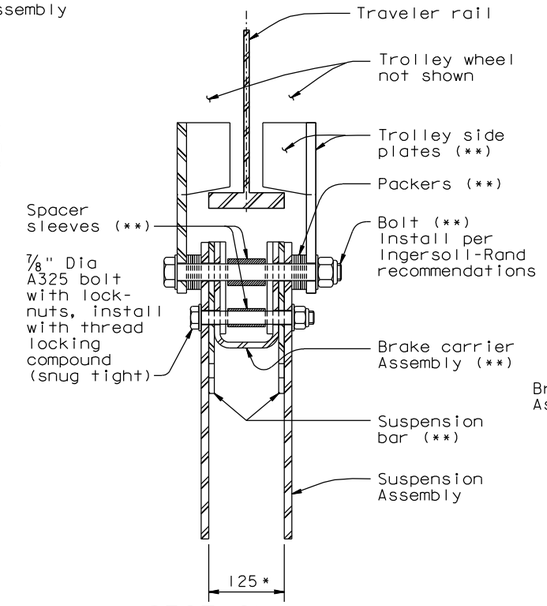

SECTION A-A

1:5 *See Note 3 **See Note 4

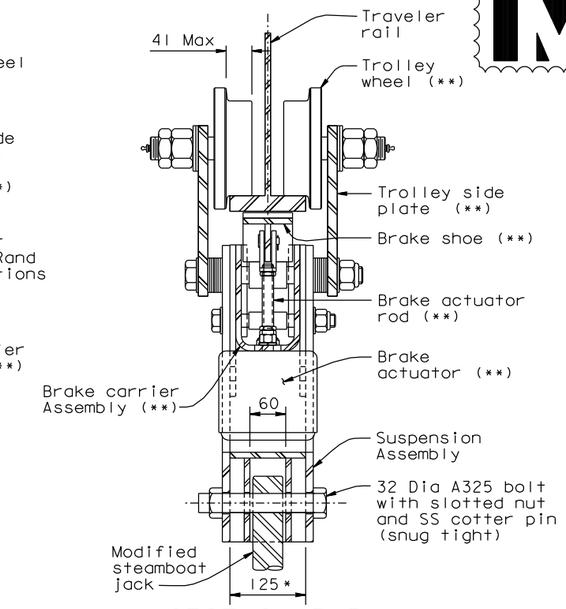

SECTION B-B

1:5 *See Note 3 **See Note 4

3

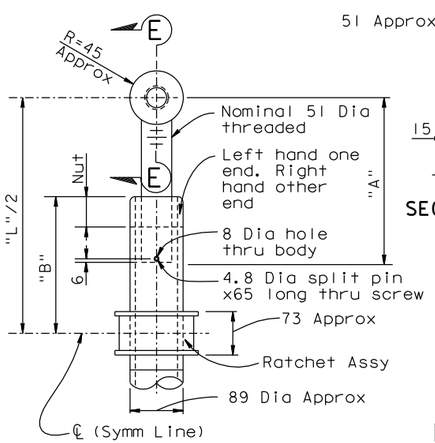

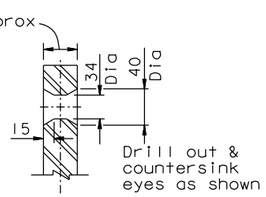

SECTION E-E

Type	No. Required	"A"	"B"	Length "L" Extended	Length "L" Retracted	Stroke
1	4	359	305	920 Min	760	160

Fabricate these jacks from Simplex ER 20, 20 Ton capacity steamboat jacks or equal.

MODIFIED STEAMBOAT JACKS

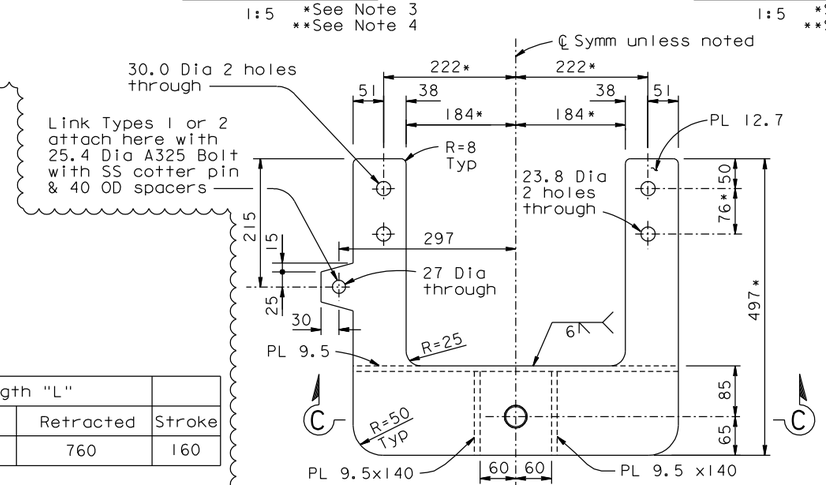

ELEVATION

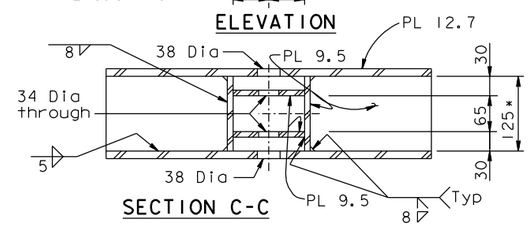

SECTION C-C

SUSPENSION ASSEMBLY

1:5 *See Note 3

ALL DIMENSIONS ARE IN MILLIMETERS UNLESS OTHERWISE SHOWN

NOTES:

1. The brake trolley assembly is designed to use Ingersoll-Rand proprietary brake trolley unit Type D03003B as the basis for this element, with added components for attachment of suspension etc. 3
2. Characteristics of the Ingersoll-Rand D03003B 3 trolleys shall be as follows:
   a. Suitable for use on 127 mm flange width
   b. Utility Load rating (at 5:1 Factor of Safety)=6000kg. per trolley.
   c. Brake to be air-release/spring-set type.
   d. Horizontal holding power of brake when "on" to be min. 275 kg per trolley.
   e. Wheels to be flat tread type. Max tread width=41 mm.
3. Dimensions indicated thus,*, are to be verified by the fabricator by measurement of the actual brake trolleys. Should actual dimensions differ from those shown, the fabricator shall adapt the dimensions shown to suit the actual dimensions. Fabricator is to advise the Engineerof all adaptations made & dimensions measured.
4. Components indicated thus, **, are sub-assembly components of the proprietary brake trolleys and are supplied as part of the brake trolleys. They are called out on this drawing for clarity for explanation.
5. Quantities given are per traveler.

REGISTERED PROFESSIONAL ENGINEER Tien Hung Ho No. C 43990 Exp. 06/30/13 CIVIL STATE OF CALIFORNIA

FOR REVISION 2 ONLY

REVISION 2 SUPERSEDES REVISION 1

CONTRACT CHANGE ORDER NO. _____
SHEET ____ OF ____

REQUESTS FOR INFORMATION NOT ADDRESSED IN THIS CCO REMAIN IN FORCE

MARK	DATE	DESCRIPTIONS	BY	CH'D	CCO#
3	08/23/11	MISCELLANEOUS TRAVELER MODIFICATIONS	TH	AS	183
2	06/19/09	TRAVELER MODIFICATIONS	TH	AS	24S1
1	07/20/07	RAIL CHANGE & MISCELLANEOUS DETAILS	RD	NV	24

REVISIONS

R. Valizadeh/V. Toan/Y.L./W.L./F.C.
DESIGN OVERSIGHT
Ryan Valizadeh / Vong Toan / Y. Liu
SIGN OFF DATE 08/23/11

	BY	CHECKED
DESIGN	J. Otter	R. Donikian
DETAILS	J. Otter	R. Donikian
QUANTITIES	J. Otter	M. Roberts

PREPARED FOR THE STATE OF CALIFORNIA DEPARTMENT OF TRANSPORTATION

R. Manzanarez
PROJECT ENGINEER

BRIDGE NO. 34-0006L/R
KILOMETER POST 13.2/13.9

SAN FRANCISCO OAKLAND BAY BRIDGE
EAST SPAN SEISMIC SAFETY PROJECT
SELF-ANCHORED SUSPENSION BRIDGE
(SUPERSTRUCTURE & TOWER)

E2/E3 BIKEPATH TRAVELER MECHANICAL-02

Rev. Date: 5-18-98

ORIGINAL SCALE IN MILLIMETERS FOR REDUCED PLANS 0 10 20 30 40 50 60 70 80 90 100

CU 04
EA 0120F1

DISREGARD PRINTS BEARING EARLIER REVISION DATES

REVISION DATES (PRELIMINARY STAGE ONLY) 04/15/02 07/01/02 12/19/02

SHEET 743R3 OF

FILE => I:\bb\04-012001\sas\contract plans and cco\cco\cco#183\7-revision 08-23-11\dgn\aktrv141.dgn

USERNAME => DWinrow DATE PLOTTED => 23 AUG 2011 TIME PLOTTED => 13:55:00

100 % PS&E