DIST.	COUNTY	ROUTE	KILOMETER POST TOTAL PROJECT	SHEET NO.	TOTAL SHEETS
04	SF	80	13.2/13.9	1138R1	1204

Caltrans Metric

REGISTERED ENGINEER - MECHANICAL

12-6-04
PLANS APPROVAL DATE

REGISTERED PROFESSIONAL ENGINEER Roupen Donikian No. M 20235 Exp. 09/30/06 MECHANICAL STATE OF CALIFORNIA

The State of California or its officers or agents shall not be responsible for the accuracy or completeness of electronic copies of this plan sheet.

T.Y. LIN / MOFFATT & NICHOL
825 BATTERY STREET
SAN FRANCISCO, CA 94111

Caltrans now has a web site! To get to the web site, go to: http://www.dot.ca.gov

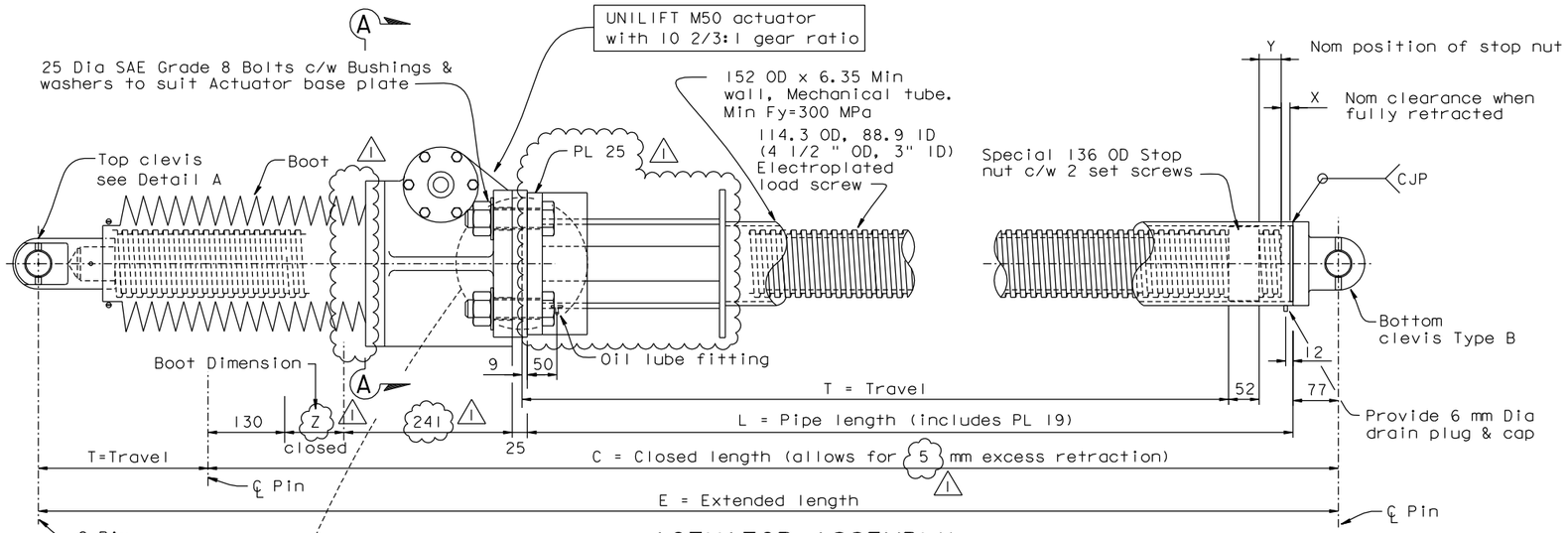

ACTUATOR ASSEMBLY
ACT - 04, - 05 & - 06

Using UNILIFT M50 actuator with 10 2/3:1 gear ratio

1:5

Location	Actuator Type	T	C	E	L	X	Y	Z	Lifted loads kN DL	Lifted loads kN LL	Nom lift speed mm/min
SAS-EB	ACT-01 (M30)	1397.5	2182	3581	1610	0	164.5	130	20	24	630
SAS-WB	ACT-02 (M30)	1323	2112	3432	1540	0	169	130	20	24	630
E2/E3-EB N	ACT-04 (M50)	1722	2563	4267	1935	0	157	155	25	30	400
E2/E3-EB S	ACT-05 (M50)	1642	2397	4020	1769	0	71	155	25	30	400
E2/E3-WB N	ACT-06 (M50)	1756	2826	4583	2198	0	394	155	25	30	400
E2/E3-WB S	ACT-03 (M50)	1471	2307	3773	1679	0	160	155	20	24	630

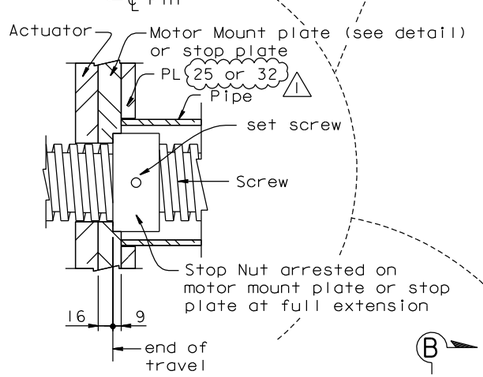

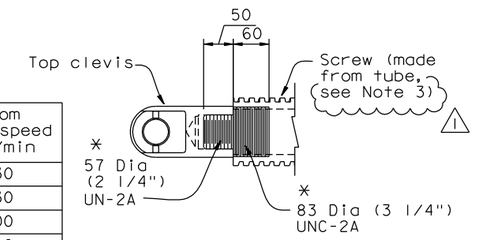

* Machine fron 102 Dia round Fy=285 Min

DETAIL A
1:5

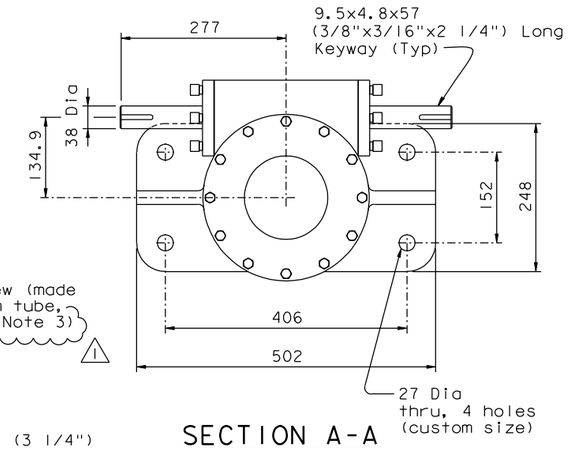

SECTION A-A
1:5

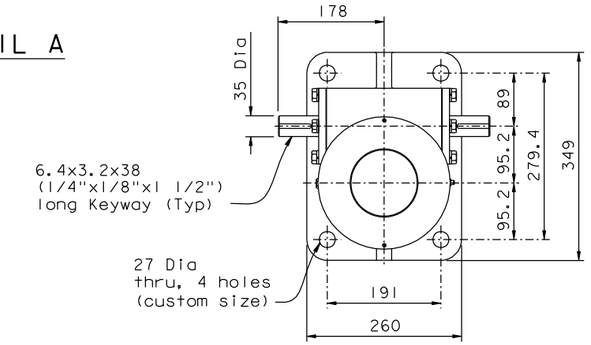

SECTION B-B
1:5

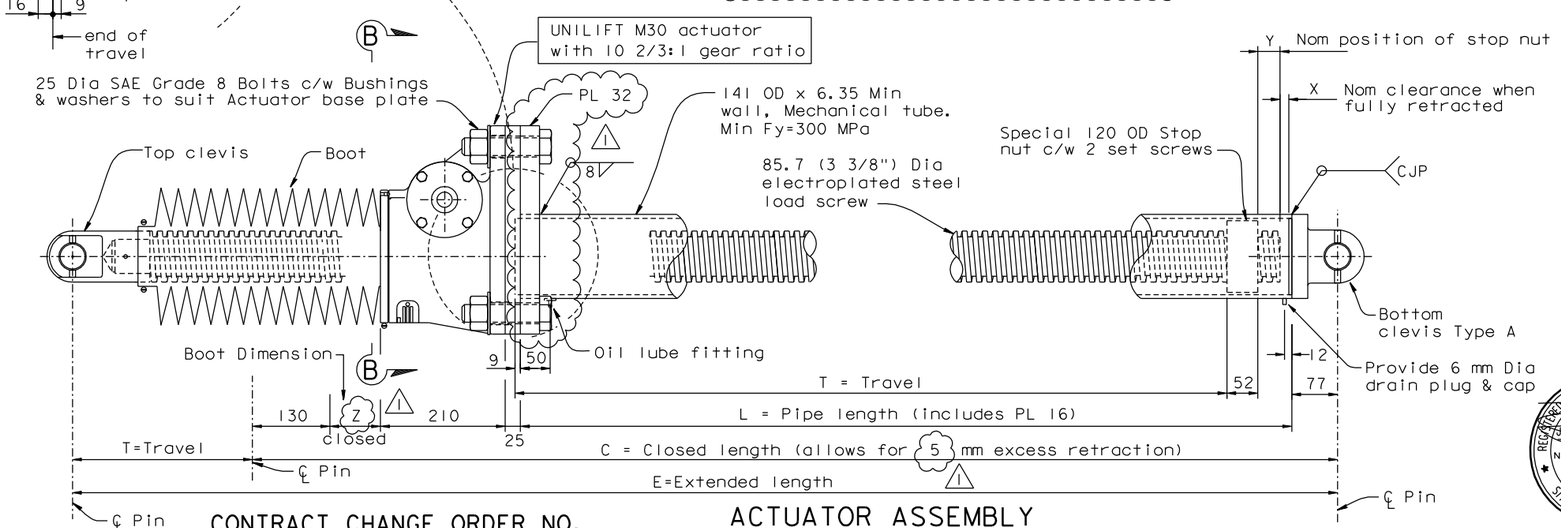

CONTRACT CHANGE ORDER NO. _____
SHEET ____ OF ____

REQUESTS FOR INFORMATION NOT ADDRESSED IN THIS CCO REMAIN IN FORCE

ACTUATOR ASSEMBLY
ACT - 01, - 02 & - 03

Using UNILIFT M30 actuator with 10 2/3:1 gear ratio

1:5

REGISTERED PROFESSIONAL ENGINEER James P.Duxbury No. C 64677 Exp. 06/30/11 CIVIL STATE OF CALIFORNIA

FOR REVISIONS ONLY

ALL DIMENSIONS ARE IN MILLIMETERS UNLESS OTHERWISE SHOWN

NOTES:

1. Manufacturer may supply sleeves & washer plates in lieu of custom hole sizes.
2. For details not shown, see "Linear Actuators And Drives -01,-02 & -04" sheets.
3. Manufacturer may supply solid screw in lieu of tube.

MARK	DATE	DESCRIPTIONS	BY	CH'D	CCO#
1	02/25/11	TRAVELER MODIFICATIONS	AS	JD	183

REVISIONS

R. Valizadeh/V. Toan/Y.L./W.L./F.C.
DESIGN OVERSIGHT
Roya Valizadeh / Vong Toan / Y. Liu
SIGN OFF DATE 02/25/11

DESIGN BY J. Otter CHECKED R. Donikian
DETAILS BY J. Otter CHECKED R. Donikian
QUANTITIES BY J. Otter CHECKED M. Roberts

PREPARED FOR THE STATE OF CALIFORNIA DEPARTMENT OF TRANSPORTATION

R. Manzanarez
PROJECT ENGINEER

BRIDGE NO. 34-0006L/R
KILOMETER POST 13.2/13.9

SAN FRANCISCO OAKLAND BAY BRIDGE
EAST SPAN SEISMIC SAFETY PROJECT
SELF-ANCHORED SUSPENSION BRIDGE
(SUPERSTRUCTURE & TOWER)

LINEAR ACTUATORS AND DRIVES-03

Rev. Date: 5-18-98

ORIGINAL SCALE IN MILLIMETERS FOR REDUCED PLANS 0 10 20 30 40 50 60 70 80 90 100

CU 04
EA 0120F1

DISREGARD PRINTS BEARING EARLIER REVISION DATES 04/18/02 01/04/02 12/19/02

SHEET 721R1 OF

FILE => I:\bb\04-01200\sas\contract plans and cco\cco\cco#183\4-revision 02-25-11\dgn\aktrvl24.dgn

USERNAME => DWinrow DATE PLOTTED => 25 FEB 2011 TIME PLOTTED => 11:57:51

100 % PS&E