DIST.	COUNTY	ROUTE	KILOMETER POST TOTAL PROJECT	SHEET NO.	TOTAL SHEETS
04	SF	80	13.2/13.9	1136R1	1204

Caltrans Metric

REGISTERED ENGINEER - MECHANICAL

12-6-04
PLANS APPROVAL DATE

REGISTERED PROFESSIONAL ENGINEER Roupen Donikian No. M 20235 Exp. 09/30/06 MECHANICAL STATE OF CALIFORNIA

The State of California or its officers or agents shall not be responsible for the accuracy or completeness of electronic copies of this plan sheet.

T.Y. LIN / MOFFATT & NICHOL
825 BATTERY STREET
SAN FRANCISCO, CA 94111

Caltrans now has a web site! To get to the web site, go to: http://www.dot.ca.gov

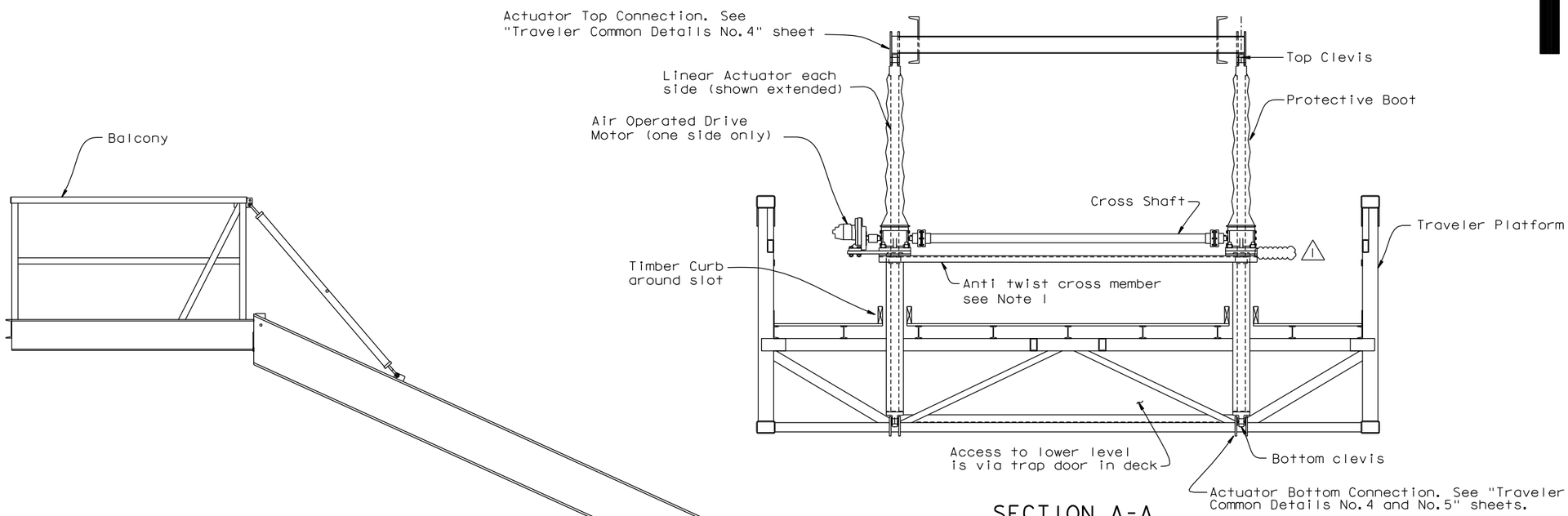

SECTION A-A
1:20

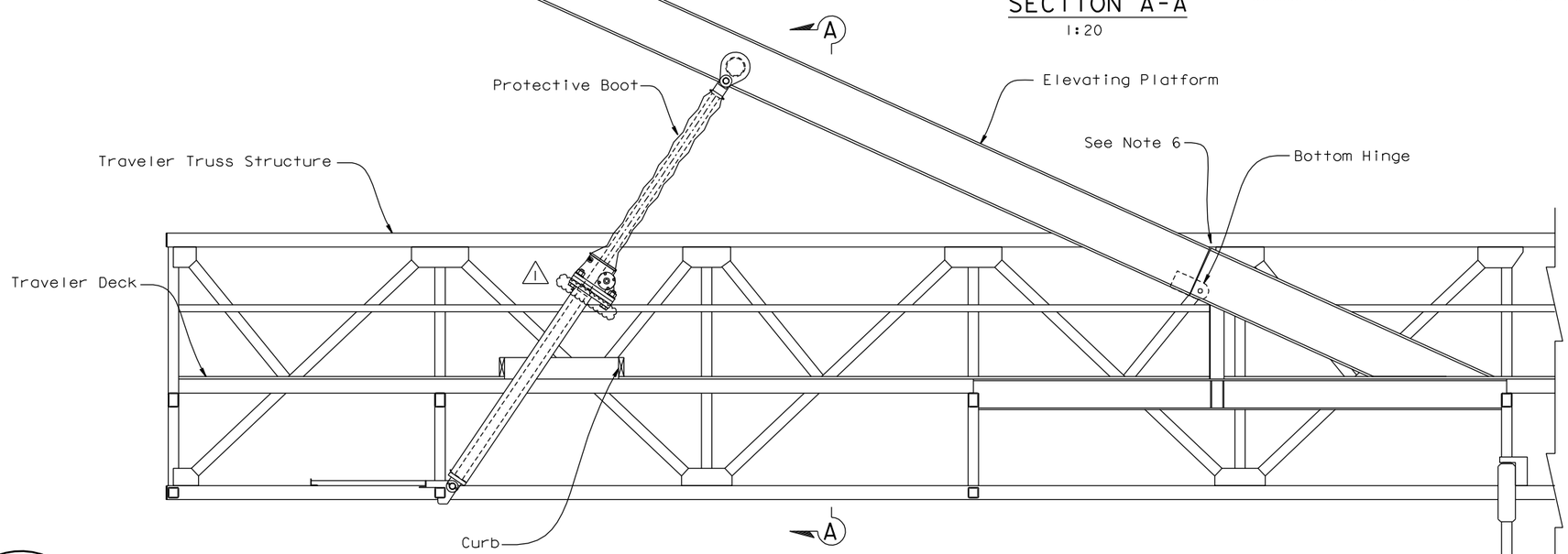

LINEAR ACTUATOR ASSEMBLY (SHOWN ON THE SAS EB TRAVELER)
1:20

NOTES:

1. The anti-twist cross member with M30 Actuator is C 150x16. With M50 Actuator it is C 230x20.
2. For Actuator notes, see "Linear Actuators And Drives - 02" sheet.
3. For Actuator details, see Linear Actuators And Drives - 03" sheet.
4. For Actuator drives, see "Linear Actuators And Drives - 04" sheet.
5. Fabricator to verify all actuator lengths, actuator attachment positions, actuator travel requirements etc.
6. Actuator lengths & travels to be such that actuator reaches full extension & is arrested before the gap at the hinge closes tight.

REGISTERED PROFESSIONAL ENGINEER James P. Duxbury No. C 64677 Exp. 06/30/11 CIVIL STATE OF CALIFORNIA

FOR REVISIONS ONLY

CONTRACT CHANGE ORDER NO. ____
SHEET ___ OF ___

REQUESTS FOR INFORMATION NOT ADDRESSED IN THIS CCO REMAIN IN FORCE

ALL DIMENSIONS ARE IN MILLIMETERS UNLESS OTHERWISE SHOWN

R. Valizadeh/V. Toan/Y.L./W.L./F.C.
DESIGN OVERSIGHT
SIGN OFF DATE 02/25/11

MARK	DATE	DESCRIPTIONS	BY	CH'D	CCO#
1	02/25/11	TRAVELER MODIFICATIONS	AS	JD	183

REVISIONS

	BY	CHECKED
DESIGN	J. Otter	R. Donikian
DETAILS	J. Otter	R. Donikian
QUANTITIES	J. Otter	M. Roberts

PREPARED FOR THE STATE OF CALIFORNIA DEPARTMENT OF TRANSPORTATION

R. Manzanarez
PROJECT ENGINEER

BRIDGE NO. 34-0006L/R
KILOMETER POST 13.2/13.9

SAN FRANCISCO OAKLAND BAY BRIDGE
EAST SPAN SEISMIC SAFETY PROJECT
SELF-ANCHORED SUSPENSION BRIDGE
(SUPERSTRUCTURE & TOWER)

LINEAR ACTUATORS AND DRIVES-01

Rev. Date: 5-18-98

ORIGINAL SCALE IN MILLIMETERS FOR REDUCED PLANS 0 10 20 30 40 50 60 70 80 90 100

CU 04
EA 0120F1

DISREGARD PRINTS BEARING EARLIER REVISION DATES → 04/15/02 01/04/02 12/19/02

SHEET 719R1 OF

FILE => I:\bb\04-012001\sas\contract plans and cco\cco\cco#183\4-revision 02-25-11\dgn\aktrv122.dgn

USERNAME => DWinrow DATE PLOTTED => 25 FEB 2011 TIME PLOTTED => 11:55:09

100% PS&E