DIST.	COUNTY	ROUTE	KILOMETER POST TOTAL PROJECT	SHEET NO.	TOTAL SHEETS
04	SF	80	13.2/13.9	1104R3	1204

Caltrans Metric

REGISTERED ENGINEER - CIVIL

12-6-04
PLANS APPROVAL DATE

REGISTERED PROFESSIONAL ENGINEER Bashkim Prishtina No. C 053561 Exp. 6/30/11 CIVIL STATE OF CALIFORNIA

The State of California or its officers or agents shall not be responsible for the accuracy or completeness of electronic copies of this plan sheet.

T.Y. LIN / MOFFATT & NICHOL
825 BATTERY STREET
SAN FRANCISCO, CA 94111

Caltrans now has a web site! To get to the web site, go to: http://www.dot.ca.gov

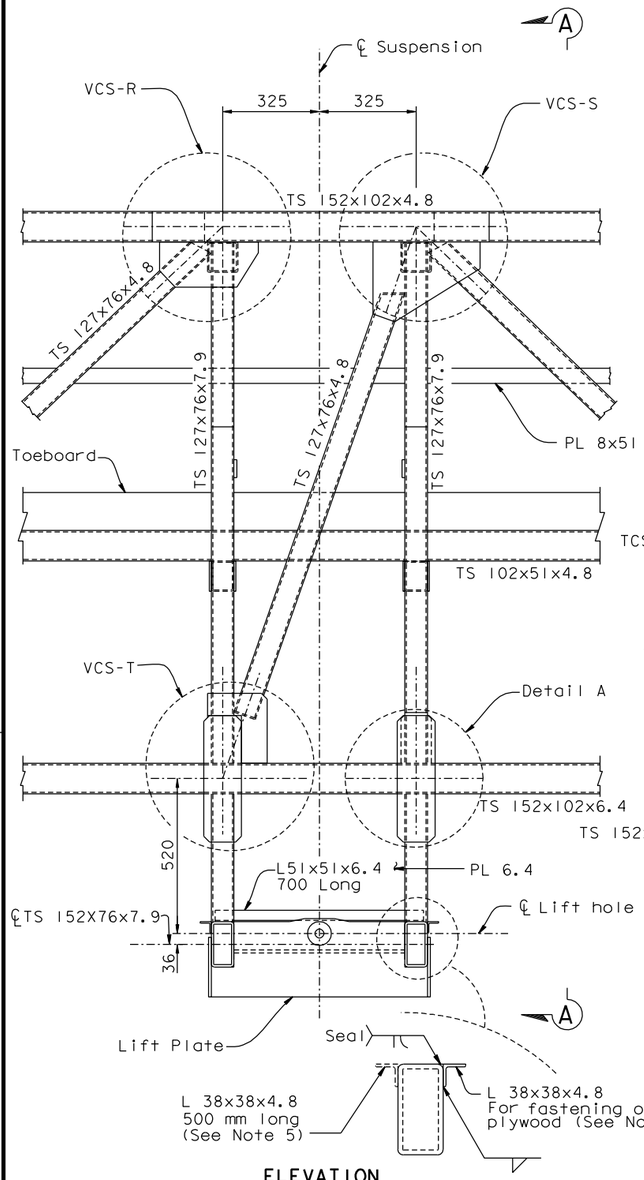

ELEVATION
View from Exterior

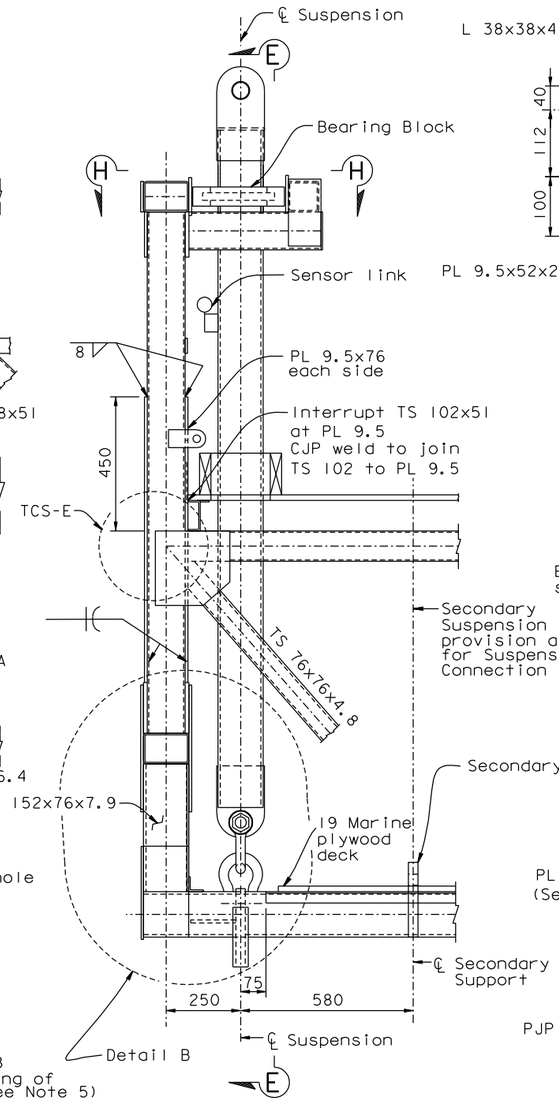

SECTION A-A

SUSPENSION CONNECTION A

1:10

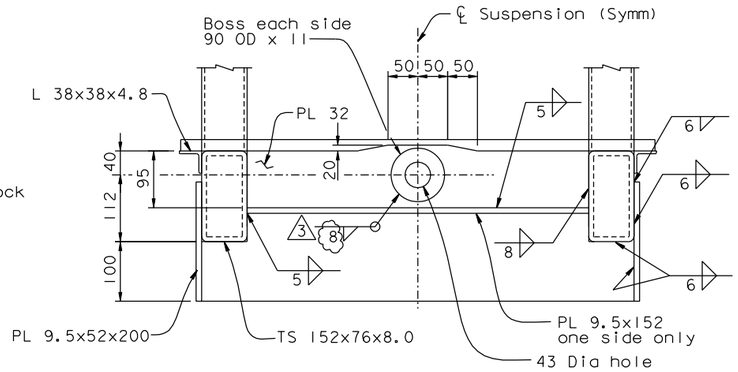

LIFT PLATE

1:5
SAS Travelers

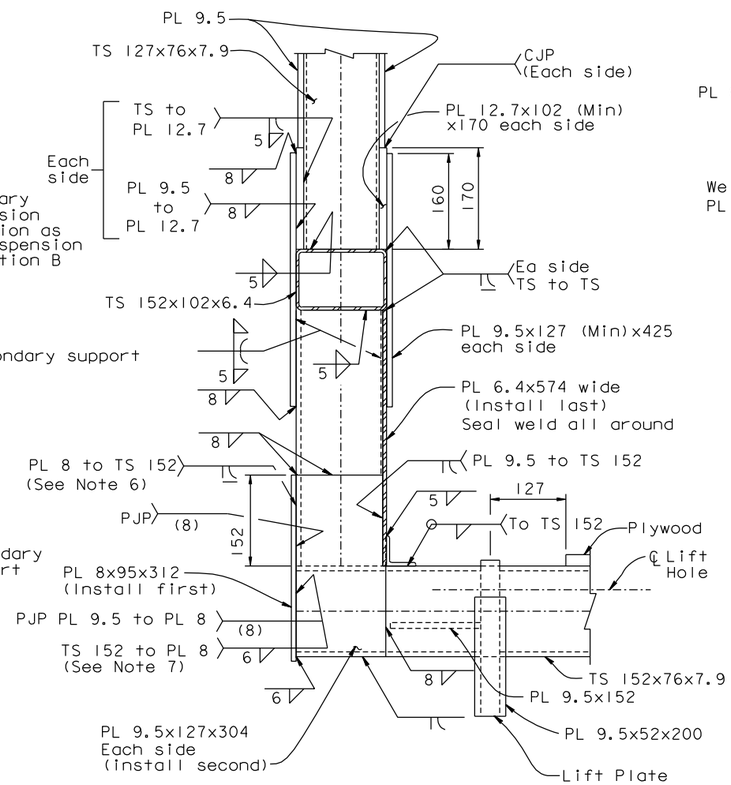

DETAIL B

1:5

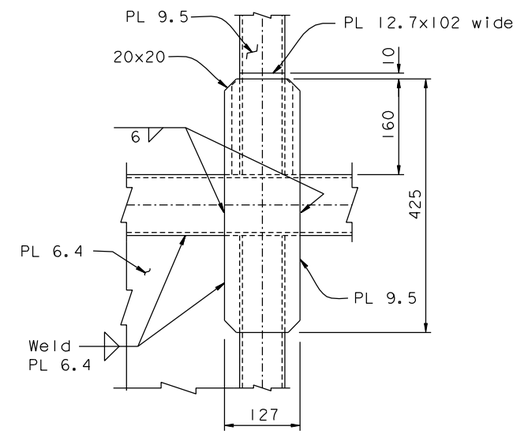

See Detail B for welding

DETAIL A

1:5

NOTES:

1. For connection Type VCS & TCS, see "Traveler Connection Details" sheets.
2. For Section E-E, see "Traveler Suspension Connection Details No.6" sheet.
3. For Section H-H, see "Traveler Suspension Connection Details No.4" sheet.
4. For secondary support, see "Traveler Suspension Connection Details No.2" sheet.
5. Angle shall be clipped at gusset plate and secondary support. At these locations an additional 500 mm long angle shall be provided on the opposite side of the TS 152x76 to support the plywood.
6. Curtail 8 mm plate at bottom of PL 9.5x127x425 and CJP weld horizontally to join the two plates.
7. At the Contractor's option, a 6 mm flush ground PJP weld for connecting PL 8 to TS 152x76 may be used.

CONTRACT CHANGE ORDER NO. _____
SHEET ____ OF ____

REQUESTS FOR INFORMATION NOT ADDRESSED IN THIS CCO REMAIN IN FORCE

MARK	DATE	DESCRIPTIONS	BY	CH'D	CCO#
3	12/23/10	TRAVELER BOSS PL WELD DETAIL	BP	AS	183
2	02/12/10	TRAVELER MODIFICATIONS	BP	AS	24S1
1	06/19/09	TRAVELER MODIFICATIONS	BP	AS	24S1

REVISIONS

R. Valizadeh/V. Toan/Y.L./W.L./F.C.
DESIGN OVERSIGHT
SIGN OFF DATE 12/23/10

Rev. Date: 5-18-98

	BY	CHECKED
DESIGN	J. Otter	B. Prishtina
DETAILS	J. Otter	M. Roberts
QUANTITIES	J. Otter	M. Roberts

PREPARED FOR THE STATE OF CALIFORNIA DEPARTMENT OF TRANSPORTATION

ALL DIMENSIONS ARE IN MILLIMETERS UNLESS OTHERWISE SHOWN

R. Manzanarez
PROJECT ENGINEER

BRIDGE NO. 34-0006L/R
KILOMETER POST 13.2/13.9

SAN FRANCISCO OAKLAND BAY BRIDGE
EAST SPAN SEISMIC SAFETY PROJECT
SELF-ANCHORED SUSPENSION BRIDGE
(SUPERSTRUCTURE & TOWER)

TRAVELER SUSPENSION CONNECTION DETAILS NO. 1

ORIGINAL SCALE IN MILLIMETERS FOR REDUCED PLANS 0 10 20 30 40 50 60 70 80 90 100

CU 04
EA 0120F1

DISREGARD PRINTS BEARING EARLIER REVISION DATES

REVISION DATES (PRELIMINARY STAGE ONLY) 04/18/02 01/10/02 12/19/02

SHEET 687R3 OF

FILE => I:\bb\04-01200I\sas\contract plans and cco\cco\cco#183\1-original 12-23-10\dgn\aktrv096.dgn

100 % PS&E

USERNAME => DWinrow DATE PLOTTED => 21 DEC 2010 TIME PLOTTED => 15:37:41