DIST.	COUNTY	ROUTE	KILOMETER POST TOTAL PROJECT	SHEET NO.	TOTAL SHEETS
04	SF	80	13.2/13.9	1132R4	1204

Caltrans Metric

George Baker
REGISTERED ENGINEER - CIVIL
12-6-04
PLANS APPROVAL DATE

REGISTERED PROFESSIONAL ENGINEER George S. Baker No. C 57112 Exp. 12/31/05 CIVIL STATE OF CALIFORNIA

The State of California or its officers or agents shall not be responsible for the accuracy or completeness of electronic copies of this plan sheet.

T.Y. LIN / MOFFATT & NICHOL
825 BATTERY STREET
SAN FRANCISCO, CA 94111

Caltrans now has a web site! To get to the web site, go to: http://www.dot.ca.gov

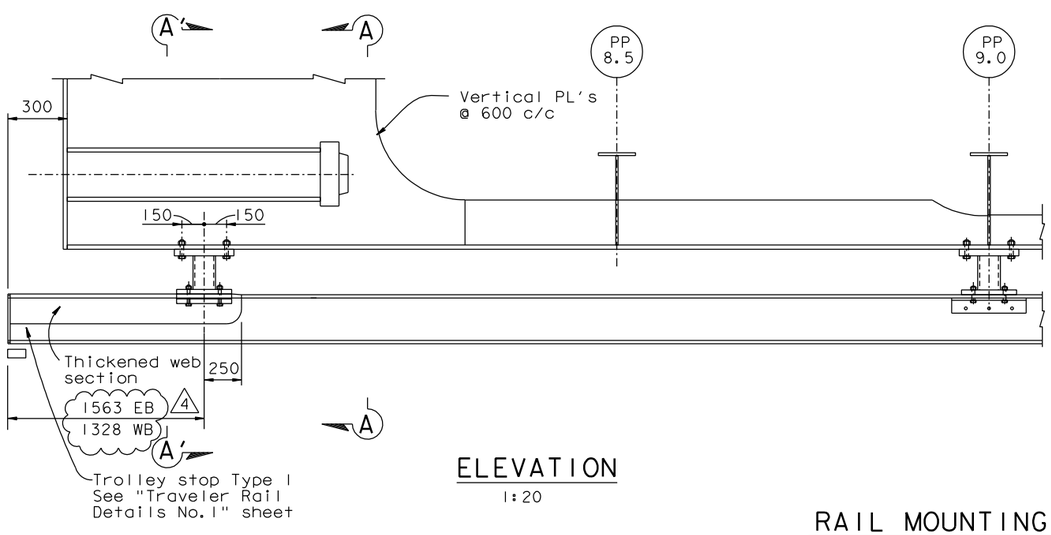

ELEVATION
1:20

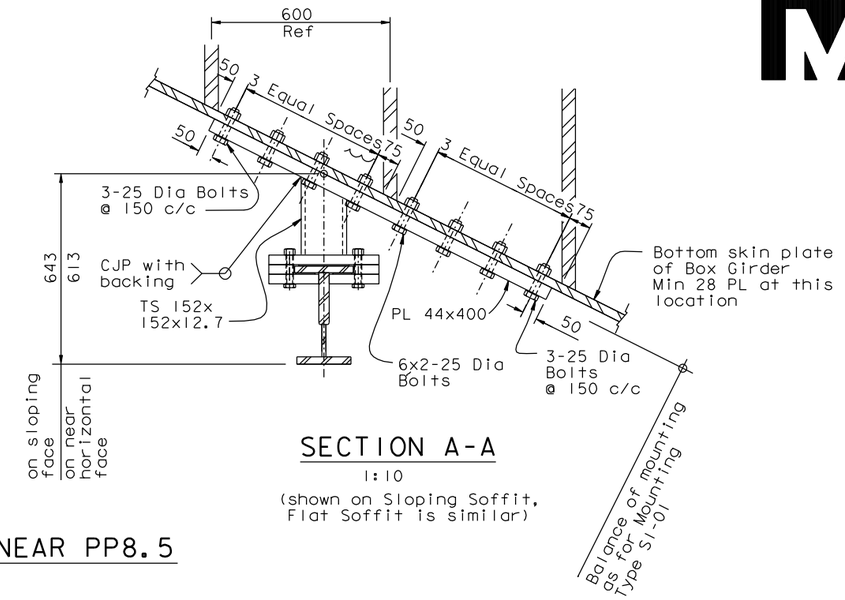

SECTION A-A
1:10
(shown on Sloping Soffit, Flat Soffit is similar)

RAIL MOUNTING NEAR PP8.5

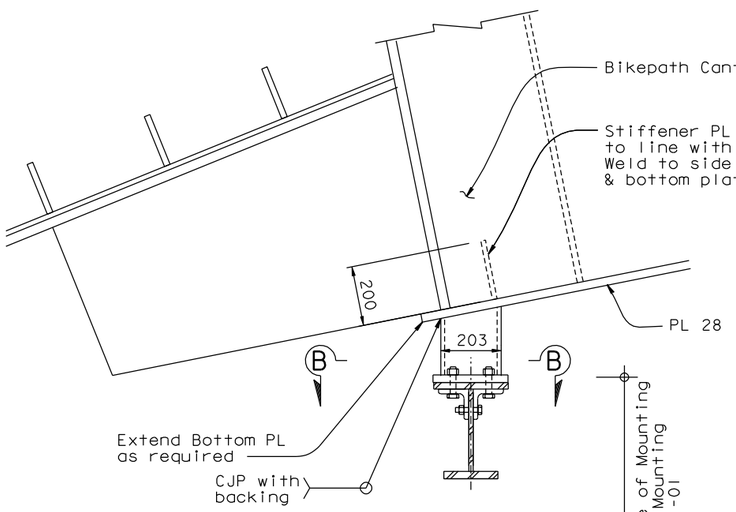

SAS EB
AT PP115

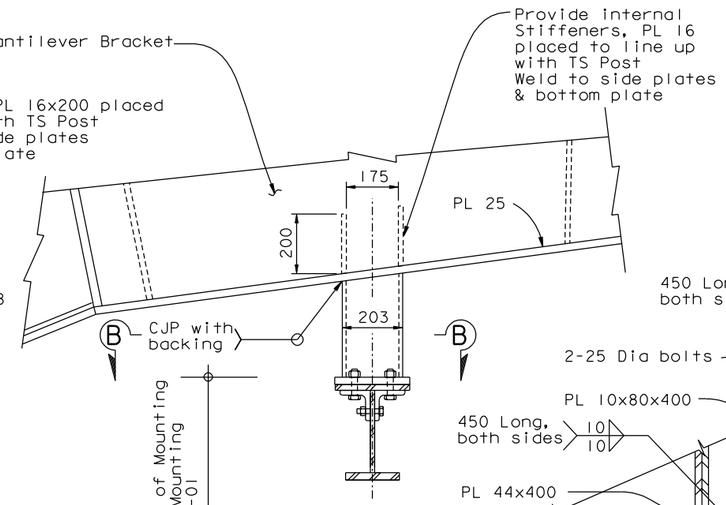

SAS EB
AT PP117
1:10

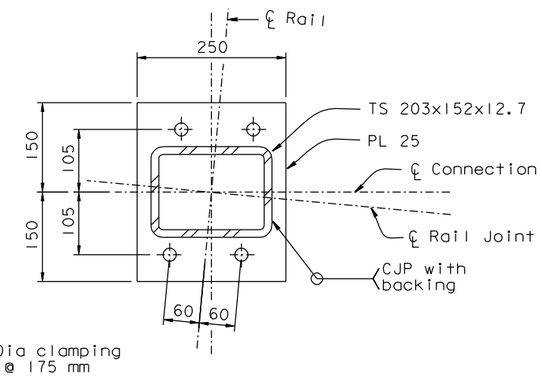

SECTION B-B
1:5

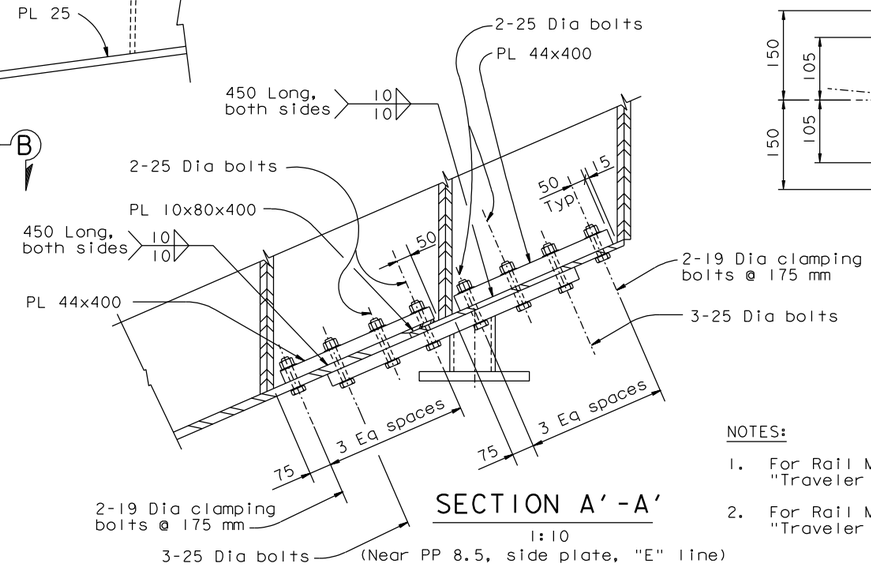

SECTION A'-A'
1:10
(Near PP 8.5, side plate, "E" line)

NOTES:

1. For Rail Mounting Type F1-01, see "Traveler Rail Details No.3" sheet.
2. For Rail Mounting Type S1-01, see "Traveler Rail Details No.6" sheet.

REGISTERED PROFESSIONAL ENGINEER Marwan N. Nader No. C 054426 Exp. 12/31/11 CIVIL STATE OF CALIFORNIA

FOR REVISIONS ONLY

REVISION 3 SUPERSEDES REVISIONS 1 & 2

CONTRACT CHANGE ORDER NO. _____
SHEET ____ OF ____

REQUESTS FOR INFORMATION NOT ADDRESSED IN THIS CCO REMAIN IN FORCE

MARK	DATE	DESCRIPTIONS	BY	CH'D	CCO#
4	08/23/11	MISCELLANEOUS TRAVELER MODIFICATIONS	TH	MN	183
3	05/18/09	TRAVELER RAIL MODIFICATIONS	MN	GB	24S0
2	07/20/07	RAIL CHANGE & MISCELLANEOUS DETAILS	GB	NV	24
1	08/04/06	TRAVELER RAILS	GB	NV	24

REVISIONS

ALL DIMENSIONS ARE IN MILLIMETERS UNLESS OTHERWISE SHOWN

R. Valizadeh/V. Toan/Y.L./W.L./F.C.
DESIGN OVERSIGHT
SIGN OFF DATE 08/23/11

	BY	CHECKED
DESIGN	J. Otter	G. Baker
DETAILS	J. Otter	M. Roberts
QUANTITIES	J. Otter	M. Roberts

PREPARED FOR THE STATE OF CALIFORNIA DEPARTMENT OF TRANSPORTATION

R. Manzanarez
PROJECT ENGINEER

BRIDGE NO. 34-0006L/R
KILOMETER POST 13.2/13.9

SAN FRANCISCO OAKLAND BAY BRIDGE
EAST SPAN SEISMIC SAFETY PROJECT
SELF-ANCHORED SUSPENSION BRIDGE
(SUPERSTRUCTURE & TOWER)

TRAVELER RAIL DETAILS NO. 13

Rev. Date: 5-18-98

ORIGINAL SCALE IN MILLIMETERS FOR REDUCED PLANS 0 10 20 30 40 50 60 70 80 90 100

CU 04
EA 0120F1

DISREGARD PRINTS BEARING EARLIER REVISION DATES 04/18/02 01/20/02 12/19/02

REVISION DATES (PRELIMINARY STAGE ONLY)

SHEET 715R4 OF

FILE => I:\bb\04-012001\sas\contract plans and cco\cco\cco#183\7-revision 08-23-11\dgn\aktrv119e.dgn

100% PS&E

USERNAME => DWinrow DATE PLOTTED => 23 AUG 2011 TIME PLOTTED => 13:47:14