DIST.	COUNTY	ROUTE	KILOMETER POST TOTAL PROJECT	SHEET NO.	TOTAL SHEETS
04	SF	80	13.2/13.9	1083S3	1204

REGISTERED ENGINEER - CIVIL

08-23-11
PLANS APPROVAL DATE

The State of California or its officers or agents shall not be responsible for the accuracy or completeness of electronic copies of this plan sheet.

REGISTERED PROFESSIONAL ENGINEER Tien Hung Ho No. C 43990 Exp. 06/30/13 CIVIL STATE OF CALIFORNIA

T.Y. LIN / MOFFATT & NICHOL
825 BATTERY STREET
SAN FRANCISCO, CA 94111

Caltrans now has a web site! To get to the web site, go to: http://www.dot.ca.gov

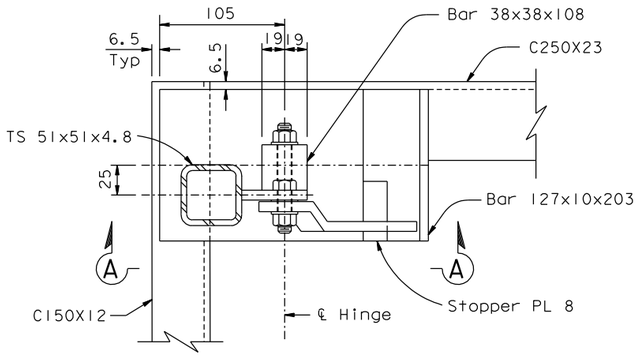

END POST
1:2.5

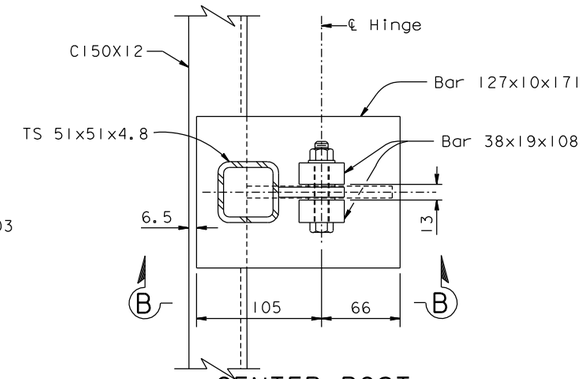

CENTER POST
1:2.5

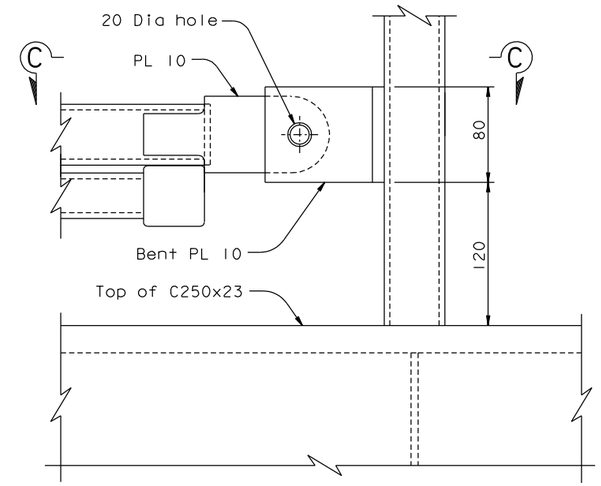

DETAIL A
1:2.5

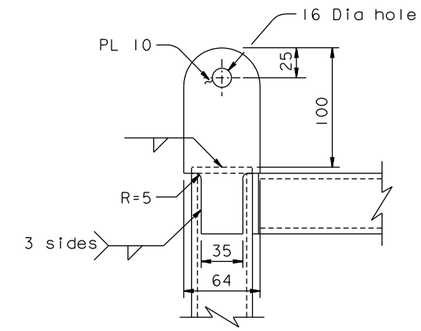

VIEW E-E
1:2.5

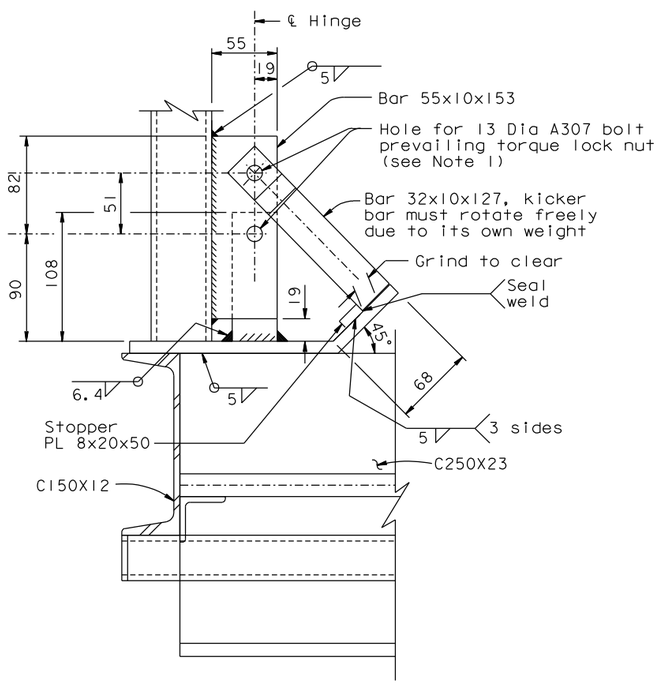

SECTION A-A
1:2.5

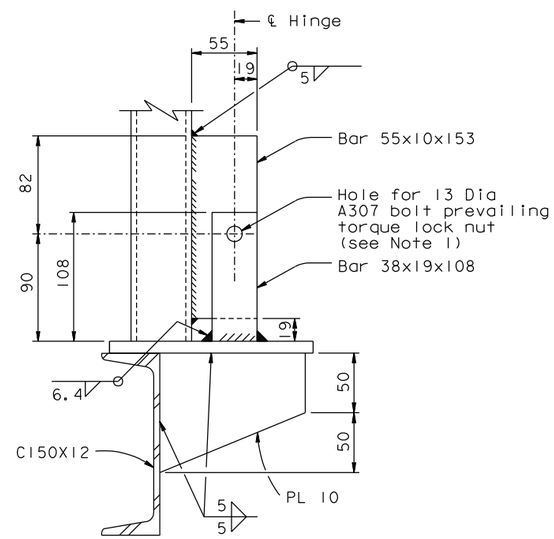

SECTION B-B
1:2.5

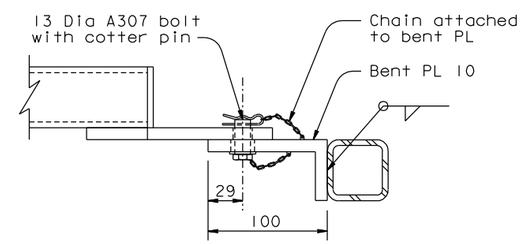

SECTION C-C
1:2.5

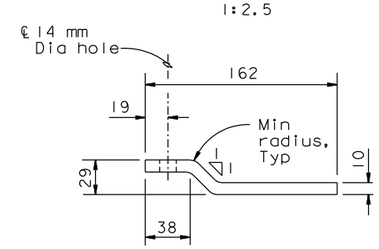

KICKER BAR
1:2.5

NOTES:

1. For 13 Dia A307 bolts, threads must be excluded from the shear plane.

CONTRACT CHANGE ORDER NO. _____
SHEET ____ OF ____

REQUESTS FOR INFORMATION NOT ADDRESSED IN THIS CCO REMAIN IN FORCE

ALL DIMENSIONS ARE IN MILLIMETERS UNLESS OTHERWISE SHOWN

MARK	DATE	DESCRIPTIONS	BY	CH'D	CCO#
0	08/23/11	MISCELLANEOUS TRAVELER MODIFICATONS	TH	JD	183

REVISIONS

R. Valizadeh/V. Toan/Y.L./W.L./F.C.
DESIGN OVERSIGHT
Ryan Valizadeh / Vong Toan / Y. Liu
SIGN OFF DATE 08/23/11

DESIGN	BY T. Ho	CHECKED J. Duxbury	
DETAILS	BY A. Baumberger	CHECKED J. Duxbury	
QUANTITIES	BY A. Baumberger	CHECKED J. Duxbury	

PREPARED FOR THE STATE OF CALIFORNIA DEPARTMENT OF TRANSPORTATION

R. Manzanarez
PROJECT ENGINEER

BRIDGE NO. 34-0006L/R
KILOMETER POST 13.2/13.9

SAN FRANCISCO OAKLAND BAY BRIDGE
EAST SPAN SEISMIC SAFETY PROJECT
SELF-ANCHORED SUSPENSION BRIDGE
(SUPERSTRUCTURE & TOWER)

TRAVELER COMMON DETAILS NO. IC

Rev. Date: 5-18-98

ORIGINAL SCALE IN MILLIMETERS FOR REDUCED PLANS 0 10 20 30 40 50 60 70 80 90 100

CU 04
EA 0120F1

DISREGARD PRINTS BEARING EARLIER REVISION DATES 08/23/11

REVISION DATES (PRELIMINARY STAGE ONLY)

SHEET 666S3 OF

FILE => I:\bb\04-012001\sas\contract plans and cco\cco\cco*183\7-revision 08-23-11\dgn\aktrv080c.dgn

100 % PS&E

USERNAME => DWinrow DATE PLOTTED => 23 AUG 2011 TIME PLOTTED => 13:43:04