DIST.	COUNTY	ROUTE	KILOMETER POST TOTAL PROJECT	SHEET NO.	TOTAL SHEETS
04	SF	80	13.2/13.9	1083S1	1204

REGISTERED ENGINEER - CIVIL

08-23-11
PLANS APPROVAL DATE

REGISTERED PROFESSIONAL ENGINEER Tien Hung Ho No. C 43990 Exp. 06/30/13 CIVIL STATE OF CALIFORNIA

The State of California or its officers or agents shall not be responsible for the accuracy or completeness of electronic copies of this plan sheet.

T.Y. LIN / MOFFATT & NICHOL
825 BATTERY STREET
SAN FRANCISCO, CA 94111

Caltrans now has a web site! To get to the web site, go to: http://www.dot.ca.gov

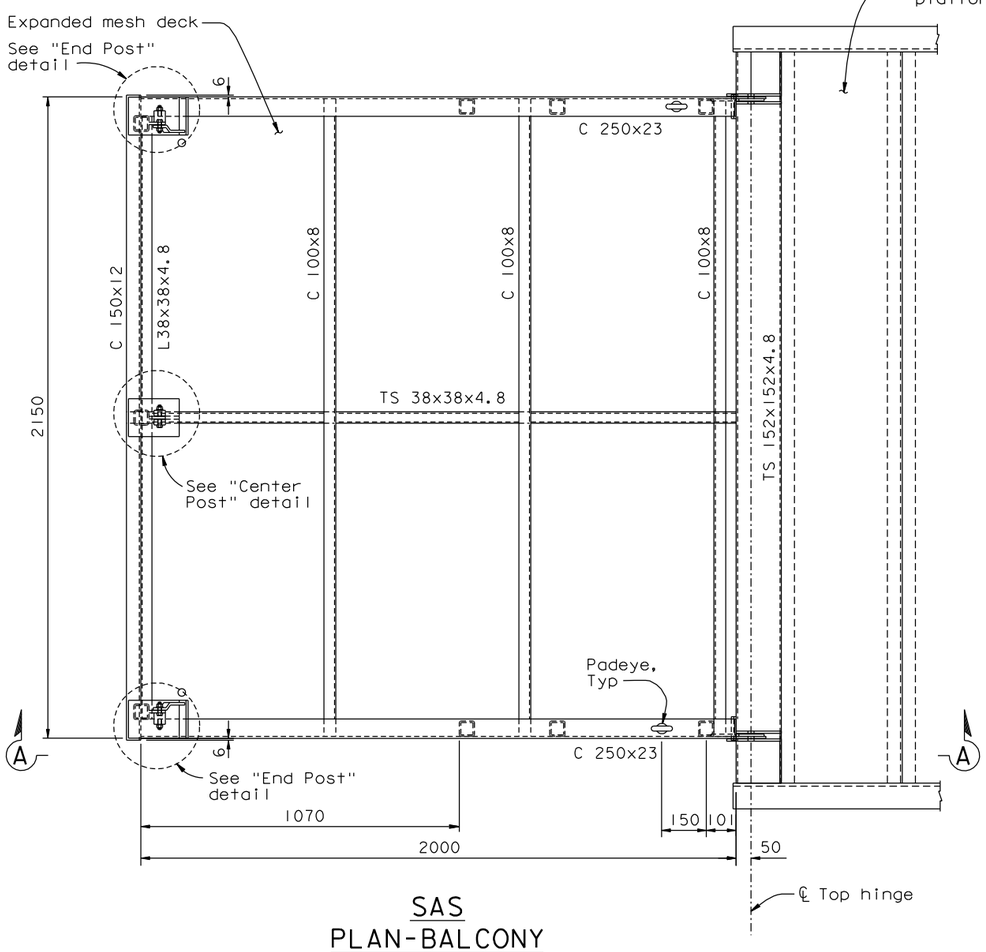

SAS
PLAN-BALCONY
1:10

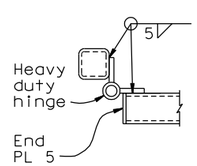

SECTION E-E
1:5

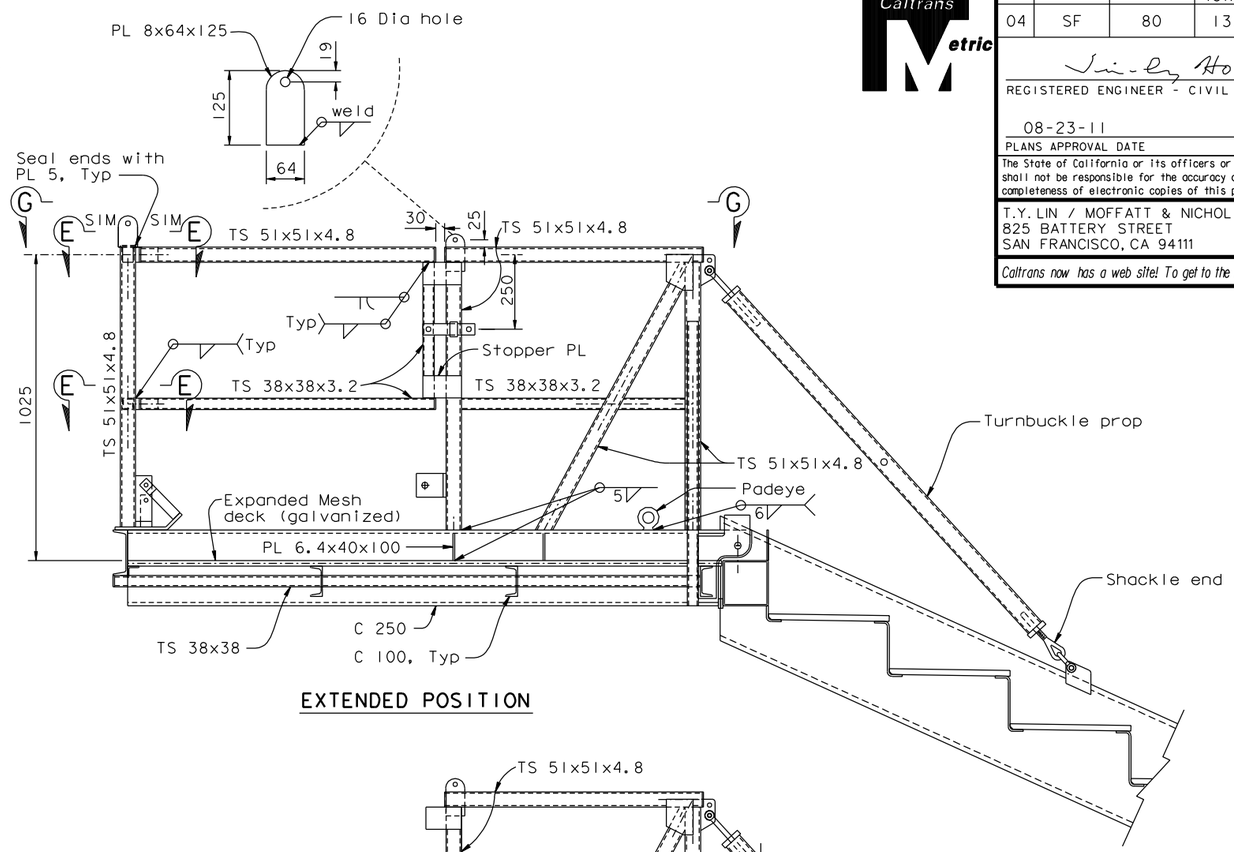

EXTENDED POSITION

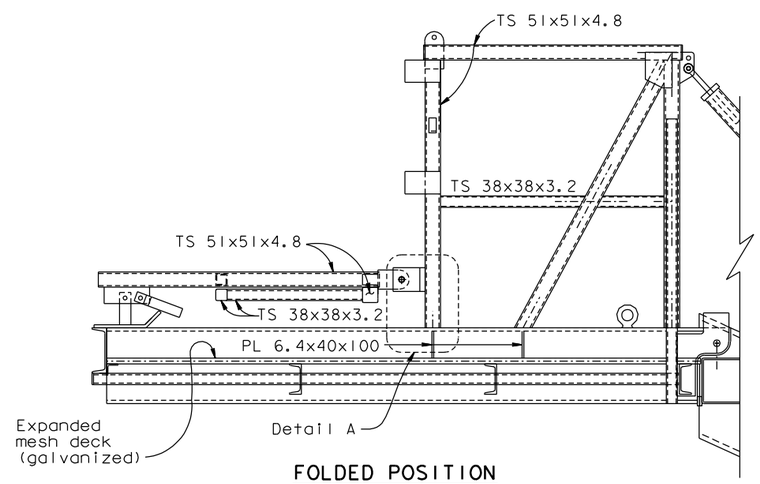

FOLDED POSITION

SECTION A-A
1:10

NOTES:

1. For details not shown, see "Traveler Common Details No. 1" sheet.
2. For View G-G, see "Traveler Common Details No. 1B" sheet.
3. For Detail A, "End Post" and "Center Post" details, see "Traveler Common Details No. 1C" sheet.
4. Padeyes shall be Crosby size No. 4 or equivalent, with a 25 mm diameter center hole.
5. Special care shall be taken to insure that the complete hinge and latch assembly will hold the safety railing in a steady manner, free of wobble while in the raised position. Maximum allowable displacement from vertical at top of railing when latched shall be 25 mm.

CONTRACT CHANGE ORDER NO. _____
SHEET ____ OF ____

REQUESTS FOR INFORMATION NOT ADDRESSED IN THIS CCO REMAIN IN FORCE

ALL DIMENSIONS ARE IN MILLIMETERS UNLESS OTHERWISE SHOWN

R. Valizadeh/V. Toan/Y.L./W.L./F.C.
DESIGN OVERSIGHT
SIGN OFF DATE 08/23/11

MARK	DATE	DESCRIPTIONS	BY	CH'D	CCO#
0	08/23/11	MISCELLANEOUS TRAVELER MODIFICATONS	TH	JD	183

REVISIONS

	BY	CHECKED
DESIGN	T. Ho	J. Duxbury
DETAILS	A. Baumberger	J. Duxbury
QUANTITIES	A. Baumberger	J. Duxbury

PREPARED FOR THE STATE OF CALIFORNIA DEPARTMENT OF TRANSPORTATION

R. Manzanarez
PROJECT ENGINEER

BRIDGE NO. 34-0006L/R
KILOMETER POST 13.2/13.9

SAN FRANCISCO OAKLAND BAY BRIDGE
EAST SPAN SEISMIC SAFETY PROJECT
SELF-ANCHORED SUSPENSION BRIDGE
(SUPERSTRUCTURE & TOWER)

TRAVELER COMMON DETAILS NO. 1A

Rev. Date: 5-18-98

ORIGINAL SCALE IN MILLIMETERS FOR REDUCED PLANS 0 10 20 30 40 50 60 70 80 90 100

CU 04
EA 0120F1

DISREGARD PRINTS BEARING EARLIER REVISION DATES 08/23/11

REVISION DATES (PRELIMINARY STAGE ONLY)

SHEET 666S1 OF

FILE => I:\bb\04-012001\sas\contract plans and cco\cco\cco#183\7-revision 08-23-11\dgn\aktrv080a.dgn

USERNAME => DWinrow DATE PLOTTED => 23 AUG 2011 TIME PLOTTED => 13:40:43

100% PS&E