DIST.	COUNTY	ROUTE	KILOMETER POST TOTAL PROJECT	SHEET NO.	TOTAL SHEETS
04	SF	80	13.2/13.9	1083R1	1204

Caltrans Metric

REGISTERED ENGINEER - CIVIL

12-6-04
PLANS APPROVAL DATE

REGISTERED PROFESSIONAL ENGINEER Bashkim Prishtina No. C 053561 Exp. 6/30/07 CIVIL STATE OF CALIFORNIA

The State of California or its officers or agents shall not be responsible for the accuracy or completeness of electronic copies of this plan sheet.

T.Y. LIN / MOFFATT & NICHOL
825 BATTERY STREET
SAN FRANCISCO, CA 94111

Caltrans now has a web site! To get to the web site, go to: http://www.dot.ca.gov

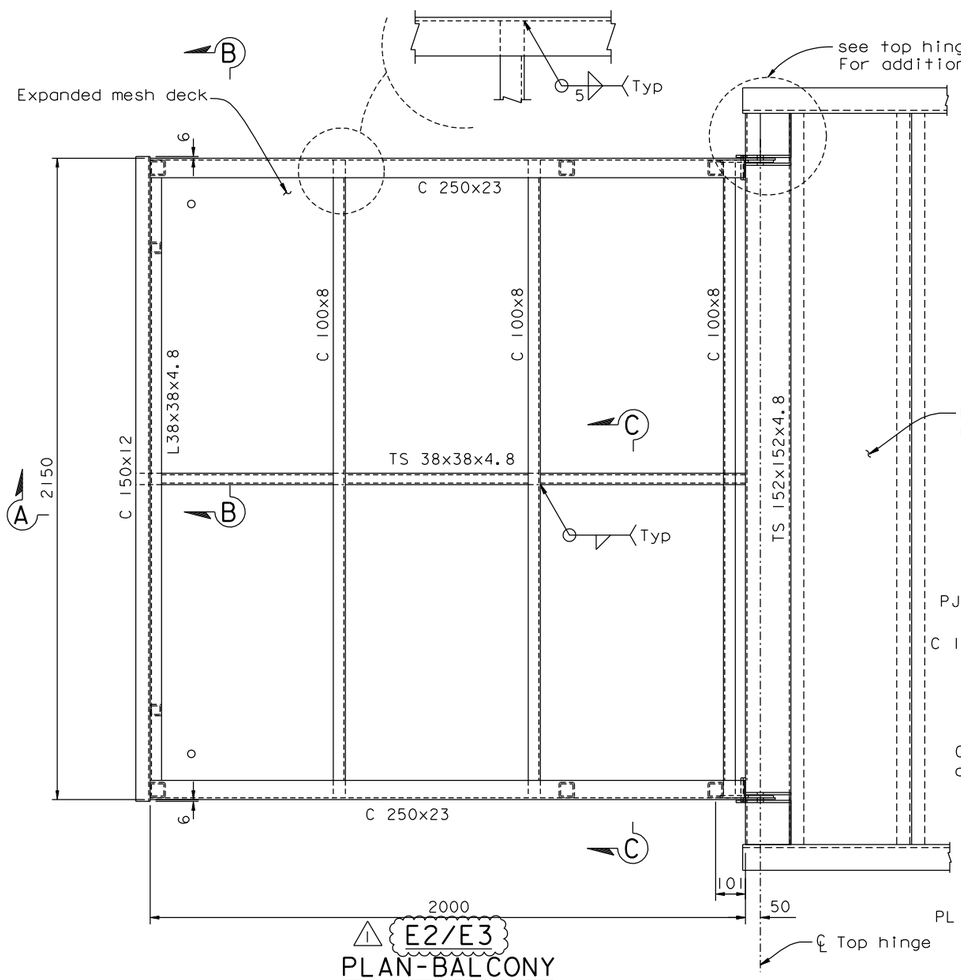

E2/E3
PLAN-BALCONY
1:10

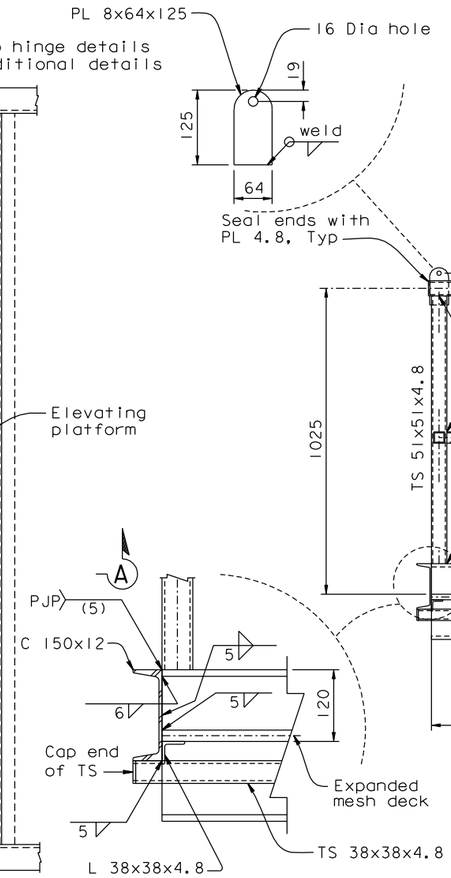

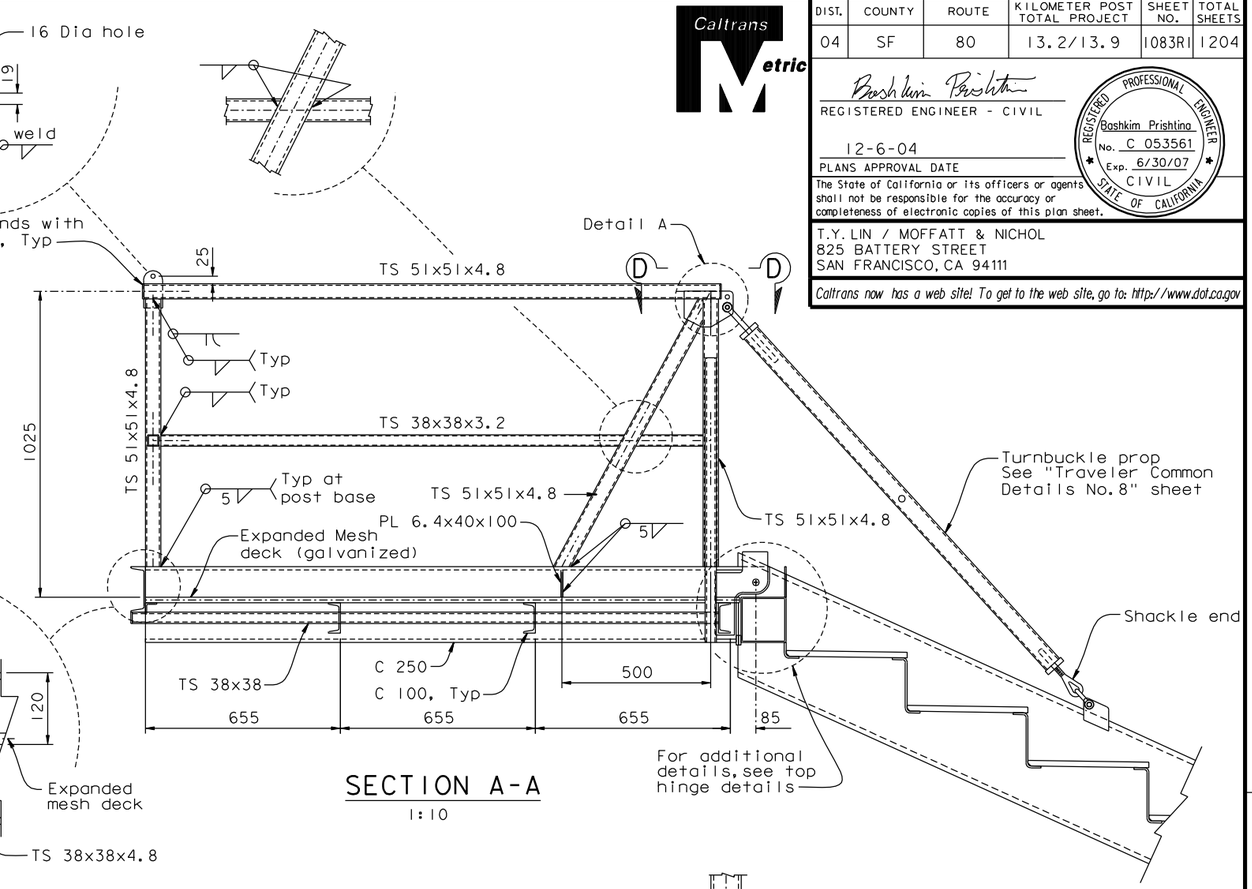

SECTION A-A
1:10

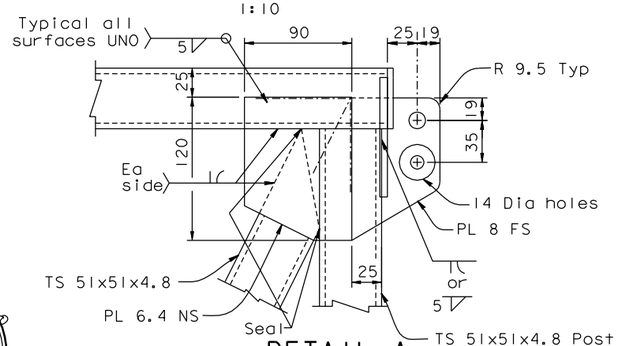

DETAIL A
1:2.5

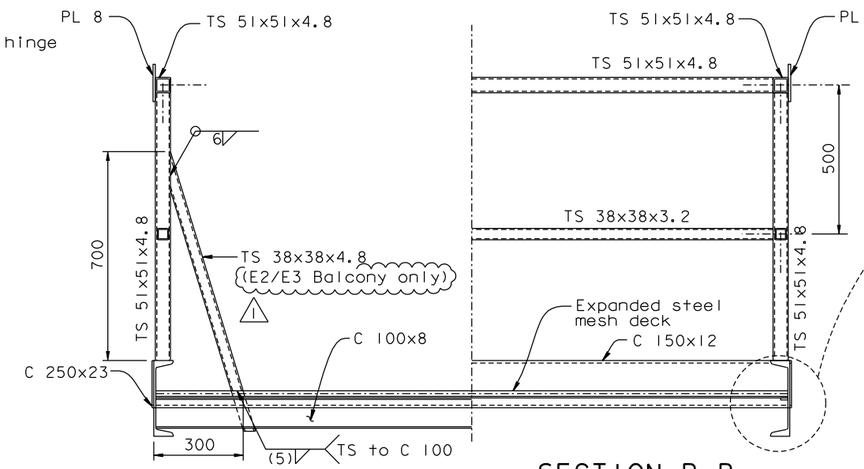

SECTION C-C
1:10

SECTION B-B
1:10

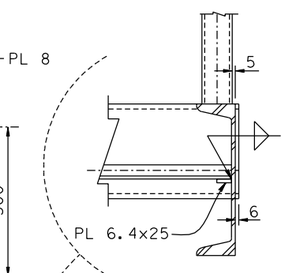

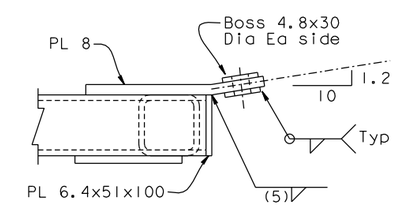

SECTION D-D
1:2.5

NOTES:

1. For top hinge details, see "Traveler Common Details No.2" sheet.
2. Expanded mesh decking is to be galvanized steel expanded mesh 5.0 psf weight, 6.4 mm thickness x 8.4 mm strand having a safe working line load on 650 mm span of 6.5 kN/m (450 plf). Mesh to be trimmed with 25 wide plate welded on top. Fasten to members below with blind rivets @ 300 c/c maximum.

ALL DIMENSIONS ARE IN MILLIMETERS UNLESS OTHERWISE SHOWN

REGISTERED PROFESSIONAL ENGINEER Tien Hung Ho No. C 43990 Exp. 06/30/13 CIVIL STATE OF CALIFORNIA

FOR REVISIONS ONLY

CONTRACT CHANGE ORDER NO. _____
SHEET ___ OF ___

REQUESTS FOR INFORMATION NOT ADDRESSED IN THIS CCO REMAIN IN FORCE

MARK	DATE	DESCRIPTIONS	BY	CH'D	CCO#
1	08/23/11	MISCELLANEOUS TRAVELER MODIFICATONS	TH	MN	183

REVISIONS

R. Valizadeh/V. Toan/Y.L./W.L./F.C.
DESIGN OVERSIGHT
Roya Valizadeh / Vong Toan / Y. Liu
SIGN OFF DATE 08/23/11

	BY	CHECKED
DESIGN	J. Otter	K. Prishtina
DETAILS	J. Otter	M. Roberts
QUANTITIES	J. Otter	M. Roberts

PREPARED FOR THE STATE OF CALIFORNIA DEPARTMENT OF TRANSPORTATION

R. Manzanarez
PROJECT ENGINEER

BRIDGE NO. 34-0006L/R
KILOMETER POST 13.2/13.9

SAN FRANCISCO OAKLAND BAY BRIDGE
EAST SPAN SEISMIC SAFETY PROJECT
SELF-ANCHORED SUSPENSION BRIDGE
(SUPERSTRUCTURE & TOWER)

TRAVELER COMMON DETAILS NO. 1

Rev. Date: 5-18-98

ORIGINAL SCALE IN MILLIMETERS FOR REDUCED PLANS 0 10 20 30 40 50 60 70 80 90 100

CU 04
EA 0120F1

DISREGARD PRINTS BEARING EARLIER REVISION DATES

REVISION DATES (PRELIMINARY STAGE ONLY) 04/18/02 01/10/02 12/19/02

SHEET 666R1 OF

FILE => L:\BB\04-012001\SAS\Contract Plans and CCO\CCO\CCO#183\7-Revision 08-23-11\DGN\aktrv080.dgn

USERNAME => DWinrow DATE PLOTTED => 23 AUG 2011 TIME PLOTTED => 13:39:19

100% PS&E