DIST.	COUNTY	ROUTE	KILOMETER POST TOTAL PROJECT	SHEET NO.	TOTAL SHEETS
04	SF	80	13.2/13.9	907R1	1204

Caltrans Metric

George Baker
REGISTERED ENGINEER - CIVIL

12-6-04
PLANS APPROVAL DATE

REGISTERED PROFESSIONAL ENGINEER George S. Baker No. C 57112 Exp. 12/31/05 CIVIL STATE OF CALIFORNIA

The State of California or its officers or agents shall not be responsible for the accuracy or completeness of electronic copies of this plan sheet.

T.Y. LIN / MOFFATT & NICHOL
825 BATTERY STREET
SAN FRANCISCO, CA 94111

Caltrans now has a web site! To get to the web site, go to: http://www.dot.ca.gov

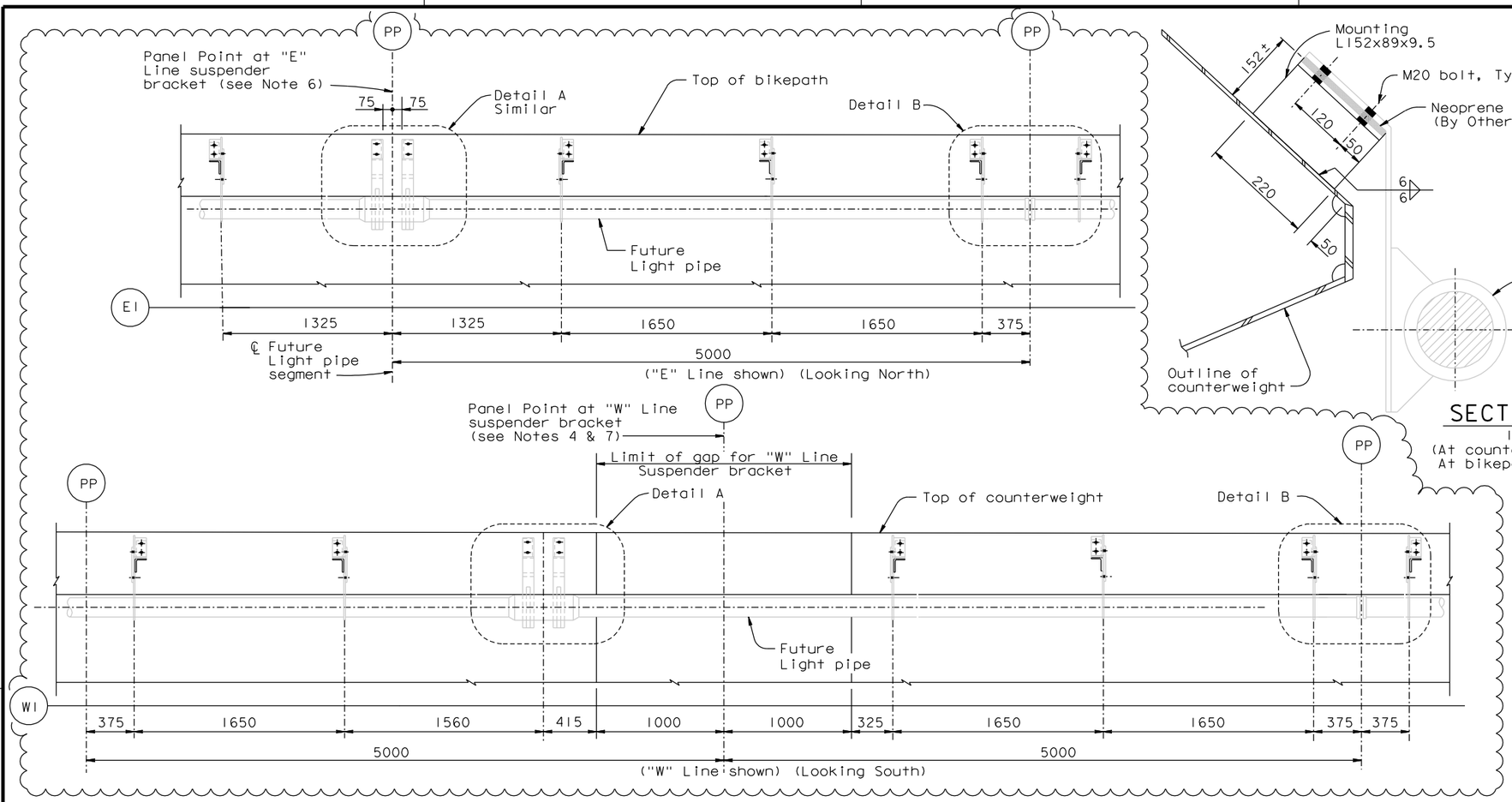

VIEW A-A

TYPICAL MOUNTING DETAIL FOR FUTURE LIGHT PIPE

1:20

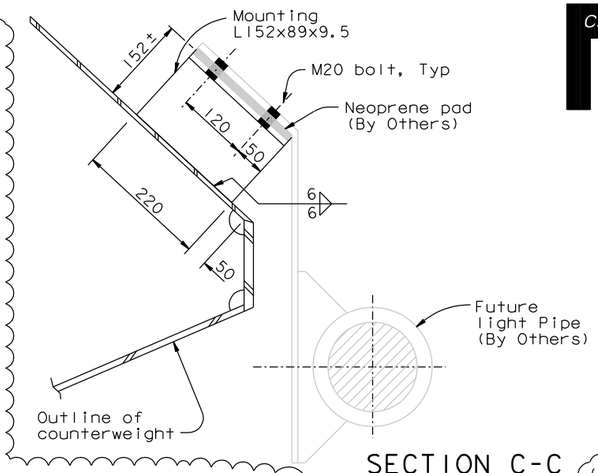

SECTION C-C

1:5

(At counterweight shown, At bikepath similar)

(See Note 8)

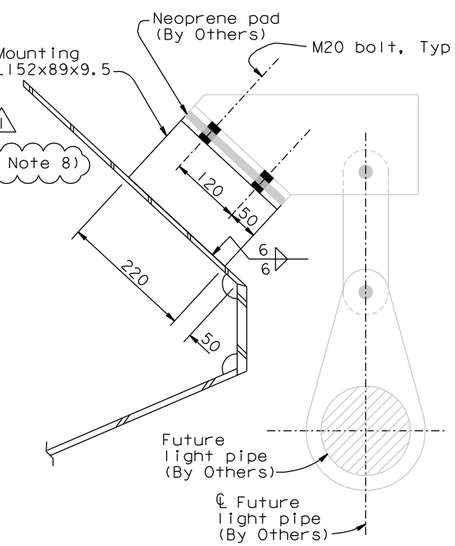

SECTION B-B

1:5

(See Note 8)

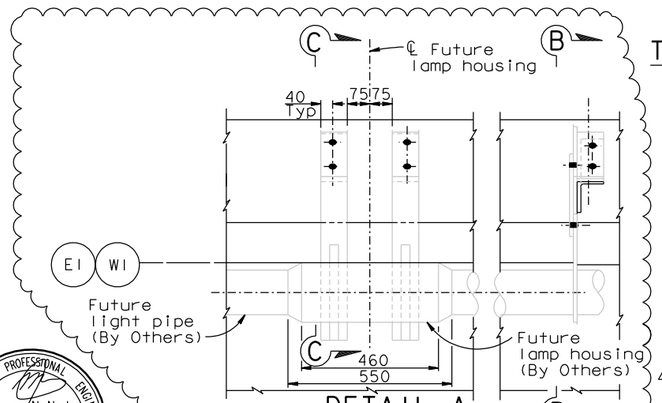

DETAIL A

1:10

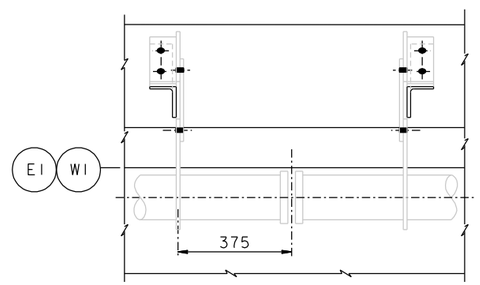

DETAIL B

1:10

(Support at light pipe Expansion joint)

NOTES:

1. Details shown for counterweight side. Bikepath side similar.
2. Mounting angles shall be installed. Future light pipe and appurtenance by Others.
3. Provide all bolts to be installed in open holes.
4. Support for future light pipe is shifted to avoid counterweight gap.
5. Light pipe support spacings are taken to the back of the mounting angles.
6. Provide lamp housing brackets at even panel points 6 through 126.
7. Provide lamp housing brackets at even panel points 8 through 104.
8. For mounting bracket removal procedures, see "Lighting Details No.3" sheet.

REGISTERED PROFESSIONAL ENGINEER Marwan N. Nader No. C 054426 Exp. 12/31/11 CIVIL STATE OF CALIFORNIA

FOR REVISIONS ONLY

CONTRACT CHANGE ORDER NO. _____
SHEET ___ OF ___

REQUESTS FOR INFORMATION NOT ADDRESSED IN THIS CCO REMAIN IN FORCE

ALL DIMENSIONS ARE IN MILLIMETERS UNLESS OTHERWISE SHOWN

100% PS&E

TIME PLOTTED => 12:14:36
DATE PLOTTED => 01 FEB 2011
USERNAME => arivera

R. Valizadeh/V. Toan/Y.L./W.L./F.C.
DESIGN OVERSIGHT
Raya Valizadeh / Vong Toan / Y. Liu
SIGN OFF DATE 02/01/11

MARK	DATE	DESCRIPTIONS	BY	CH'D	CCO#
1	02/01/11	BRACKETS FOR FUTURE LIGHT PIPES	GB	MN	182

REVISIONS

	BY	CHECKED
DESIGN	G. Baker	T. Ho
DETAILS	M. Gulyas	T. Ho
QUANTITIES	C. Mauch	N. Vo

PREPARED FOR THE STATE OF CALIFORNIA DEPARTMENT OF TRANSPORTATION

R. Manzanarez
PROJECT ENGINEER

BRIDGE NO. 34-0006L/R
KILOMETER POST 13.2/13.9

SAN FRANCISCO OAKLAND BAY BRIDGE
EAST SPAN SEISMIC SAFETY PROJECT
SELF-ANCHORED SUSPENSION BRIDGE
(SUPERSTRUCTURE & TOWER)

LIGHTING DETAILS NO. 2

Rev. Date: 5-18-98

ORIGINAL SCALE IN MILLIMETERS FOR REDUCED PLANS 0 10 20 30 40 50 60 70 80 90 100

CU 04
EA 0120F1

DISREGARD PRINTS BEARING EARLIER REVISION DATES

REVISION DATES (PRELIMINARY STAGE ONLY) 01/15/99 05/15/99 08/05/99 05/17/01 04/08/02 07/09/02 12/19/02

SHEET 490R1 OF

FILE => I:\bb\04-012001\sas\contract plans and cco\cco\cco#182\1-original 02-01-11\dgn\aklht07.dgn