DIST	COUNTY	ROUTE	KILOMETER POST TOTAL PROJECT	SHEET NO.	TOTAL SHEETS
04	SF	80	13.2/13.9	173R1	1204

REGISTERED ENGINEER-CIVIL

12-6-04
PLANS APPROVAL DATE

REGISTERED PROFESSIONAL ENGINEER
T. W. SPARKS
No. E16039
Exp. 9-30-11
ELECTRICAL
STATE OF CALIFORNIA

The State of California or its officers or agents shall not be responsible for the accuracy or completeness of electronic copies of this plan sheet.

T.Y. LIN / MOFFATT & NICHOL
825 BATTERY STREET
SAN FRANCISCO, CA 94111

Caltrans now has a web site! To get to the web site, go to: http://www.dot.ca.gov

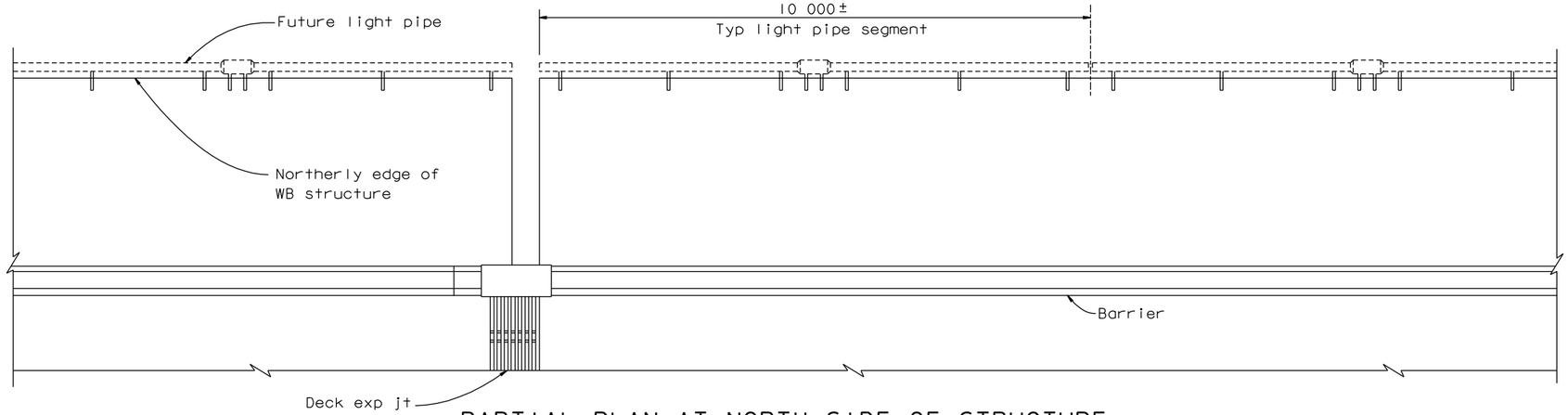

PARTIAL PLAN AT NORTH SIDE OF STRUCTURE
1:50

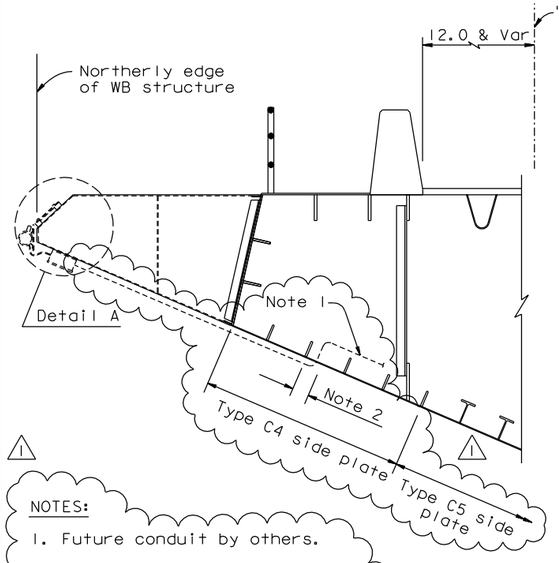

NOTES:

1. Future conduit by others.
2. 51 mm diameter pipe sleeve is located 100 mm from the 2nd stiffener toward the 3rd stiffener and 1000 mm West of even panel point. If splice of side plate C4 is near the West of even panel point, locate the hole 1000 mm East of even panel point.

TYPICAL SECTION AT SAS SUPERSTRUCTURE
1:30

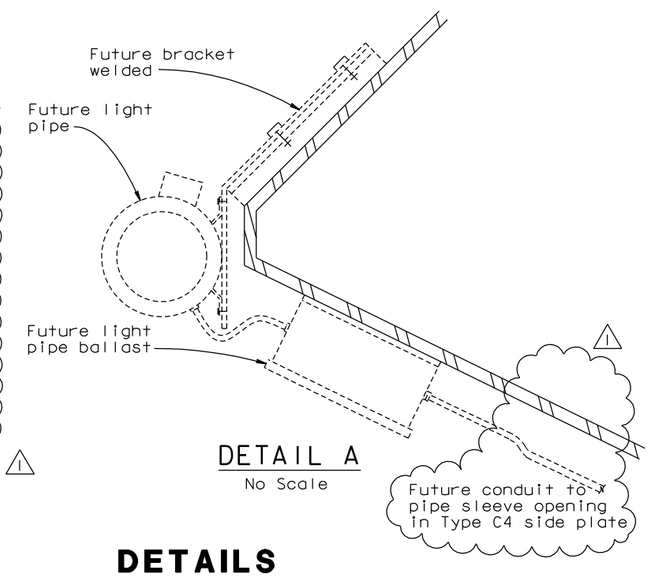

DETAIL A
No Scale

CONTRACT CHANGE ORDER NO. _____
SHEET ____ OF ____

REQUESTS FOR INFORMATION NOT ADDRESSED IN THIS CCO REMAIN IN FORCE					
1	02/10/11	BRACKETS FOR FUTURE LIGHT PIPES	TS	JB	182
MARK	DATE	DESCRIPTIONS	BY	CH'D	CCO#
REVISIONS					

Note: For "Typical Light Pipe installation 1 & 2" sheets see "SAS Superstructure Roadway Eastbound"

ALL DIMENSIONS ARE IN MILLIMETERS UNLESS OTHERWISE SHOWN.

DETAILS
SAS SUPERSTRUCTURE ROADWAY WESTBOUND
TYPICAL LIGHT PIPE INSTALLATION 1

SCALE AS NOTED

E-121

	DATE	REVISED BY
CALCULATED/DESIGNED BY	GAM 10/00	
CHECKED BY	TYL 10/00	DATE REVISED

DESIGN OVERSIGHT
BOB ZANDIPOUR

STATE OF CALIFORNIA - DEPARTMENT OF TRANSPORTATION
Caltrans

SAS STRUCTURE

FOR REDUCED PLANS ORIGINAL SCALE IN MILLIMETERS 0 20 40 60 80

FILE => L:\BB\04-012001\SAS\Contract Plans and CCO\CCO\CCO#182\update 02-10-11\DGN\40120fual21.dgn
USERNAME => DWinrow

LAST REVISION 04-19-00
DATE PLOTTED => 10 FEB 2011
TIME PLOTTED => 11:52:28

DIST	COUNTY	ROUTE	KILOMETER POST TOTAL PROJECT	SHEET NO.	TOTAL SHEETS
04	SF	80	13.2/13.9	227R1	1204

Caltrans Metric

REGISTERED ENGINEER-CIVIL

12-6-04

PLANS APPROVAL DATE

REGISTERED PROFESSIONAL ENGINEER T. W. SPARKS No. E16039 Exp. 9-30-11 ELECTRICAL STATE OF CALIFORNIA

The State of California or its officers or agents shall not be responsible for the accuracy or completeness of electronic copies of this plan sheet.

T.Y. LIN / MOFFATT & NICHOL
825 BATTERY STREET
SAN FRANCISCO, CA 94111

Caltrans now has a web site! To get to the web site, go to: http://www.dot.ca.gov

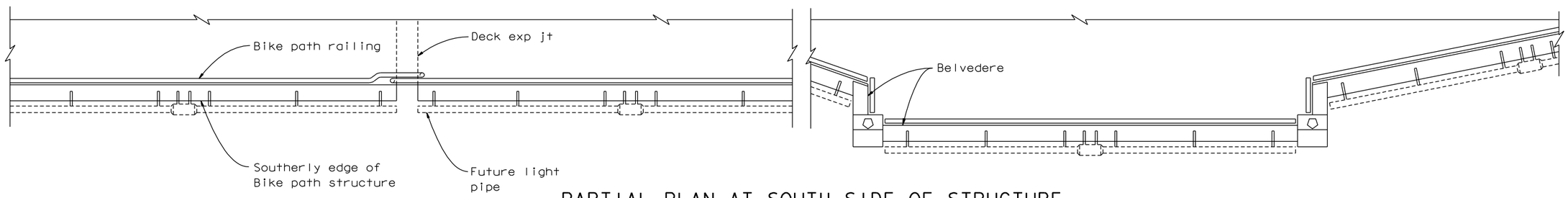

PARTIAL PLAN AT SOUTH SIDE OF STRUCTURE

1:50

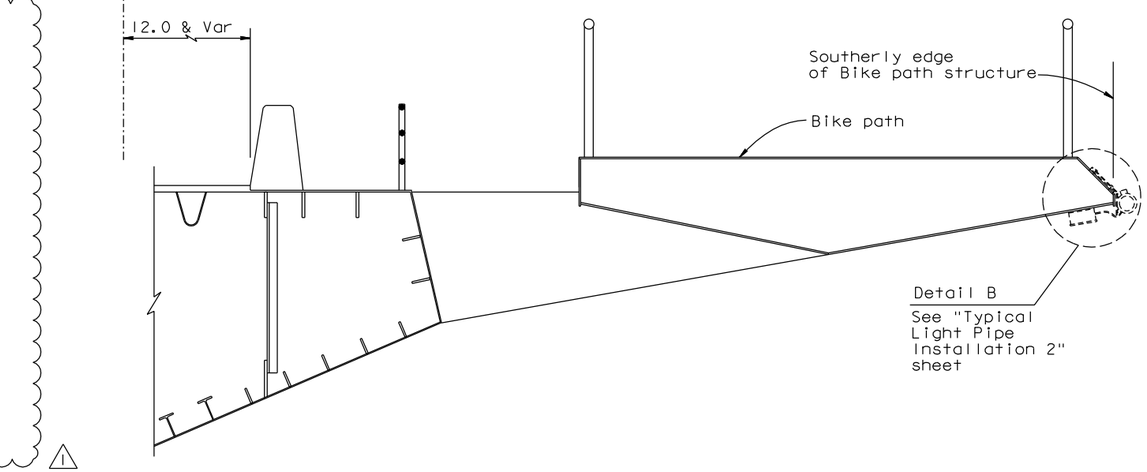

TYPICAL SECTION AT SAS SUPERSTRUCTURE

1:30

CONTRACT CHANGE ORDER NO. _____
SHEET ____ OF ____

REQUESTS FOR INFORMATION NOT ADDRESSED IN THIS CCO REMAIN IN FORCE

MARK	DATE	DESCRIPTIONS	BY	CH'D	CCO#
1	02/01/11	BRACKETS FOR FUTURE LIGHT PIPES	TS	JB	182

REVISIONS

DETAILS
SAS SUPERSTRUCTURE GIRDER EASTBOUND
TYPICAL LIGHT PIPE INSTALLATION 1

SCALE AS NOTED

ALL DIMENSIONS ARE IN
MILLIMETERS UNLESS OTHERWISE SHOWN.

E-202

	DATE	REVISED BY	DATE REVISED
CALCULATED/DESIGNED BY	GAM	10/00	
CHECKED BY	TYL	10/00	

DESIGN OVERSIGHT: BOB ZANDIPOUR

SAS STRUCTURE

STATE OF CALIFORNIA - DEPARTMENT OF TRANSPORTATION

Caltrans

LAST REVISION 04-19-00

DATE PLOTTED => 09 FEB 2011
TIME PLOTTED => 16:52:54

FOR REDUCED PLANS
ORIGINAL SCALE IN MILLIMETERS 0 20 40 60 80

FILE => I:\bb\04-012001\sas\contract plans and cco\cco\cco*182\update 02-10-11\dgn\40120fua202.dgn
USERNAME => DWinrow

DIST.	COUNTY	ROUTE	KILOMETER POST TOTAL PROJECT	SHEET NO.	TOTAL SHEETS
04	SF	80	13.2/13.9	907R1	1204

Caltrans Metric

George Baker
REGISTERED ENGINEER - CIVIL

12-6-04
PLANS APPROVAL DATE

REGISTERED PROFESSIONAL ENGINEER George S. Baker No. C 57112 Exp. 12/31/05 CIVIL STATE OF CALIFORNIA

The State of California or its officers or agents shall not be responsible for the accuracy or completeness of electronic copies of this plan sheet.

T.Y. LIN / MOFFATT & NICHOL
825 BATTERY STREET
SAN FRANCISCO, CA 94111

Caltrans now has a web site! To get to the web site, go to: http://www.dot.ca.gov

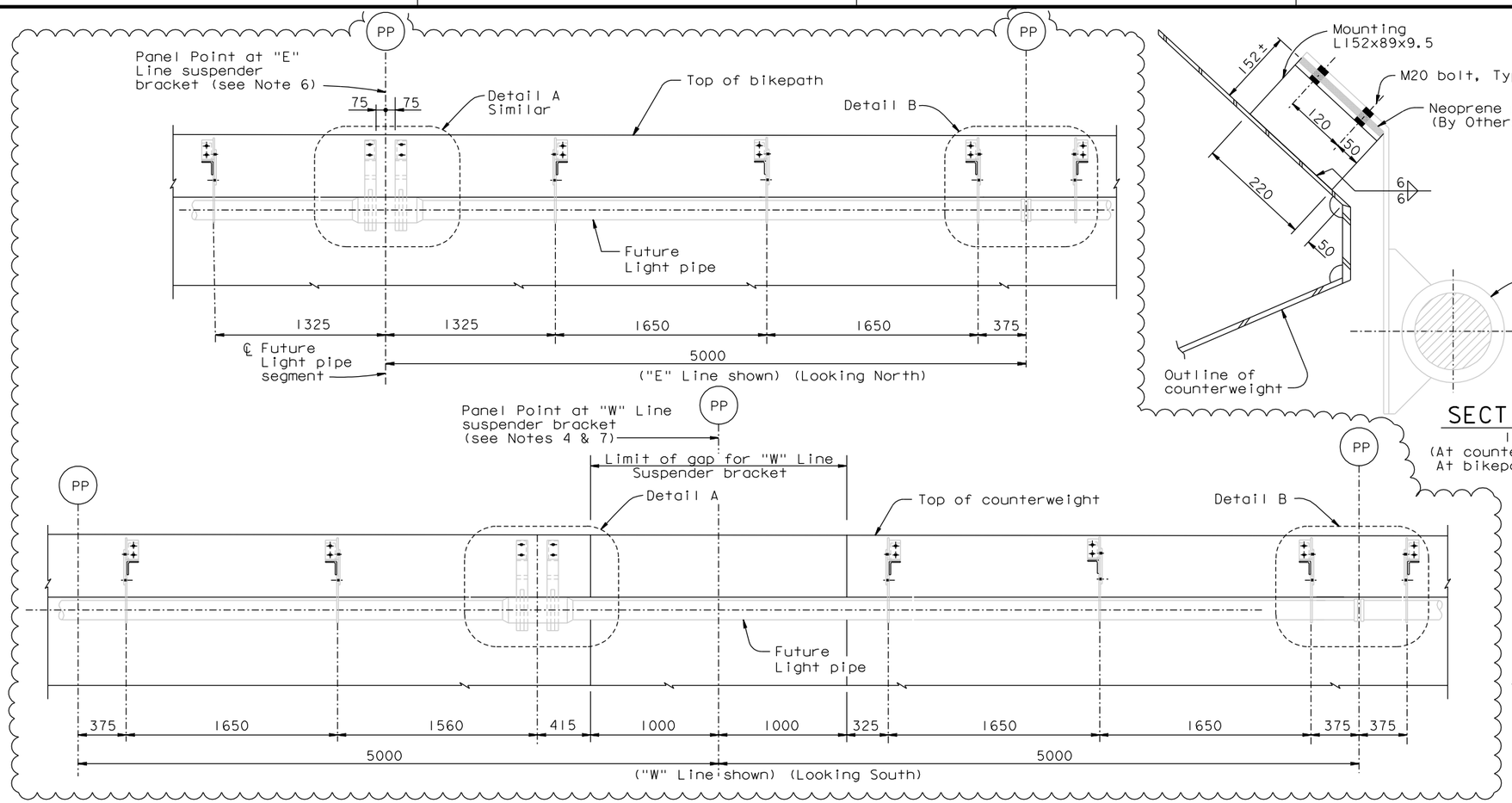

VIEW A-A

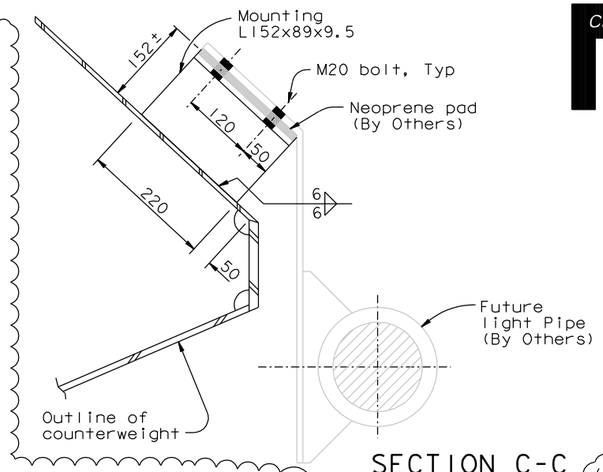

SECTION C-C
1:5
(At counterweight shown, At bikepath similar)

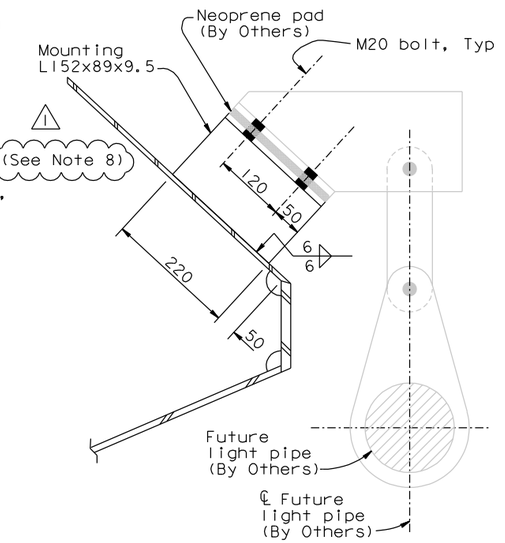

SECTION B-B
1:5
(See Note 8)

TYPICAL MOUNTING DETAIL FOR FUTURE LIGHT PIPE
1:20

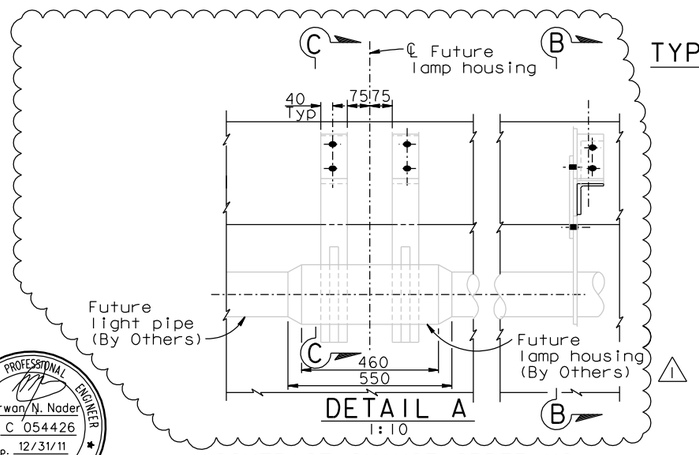

DETAIL A
1:10

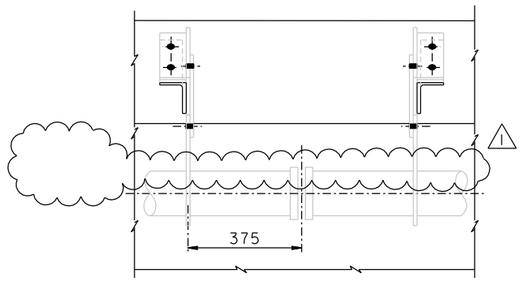

DETAIL B (Support at light pipe Expansion joint)
1:10

NOTES:

1. Details shown for counterweight side. Bikepath side similar.
2. Mounting angles shall be installed. Future light pipe and appurtenance by Others.
3. Provide all bolts to be installed in open holes.
4. Support for future light pipe is shifted to avoid counterweight gap.
5. Future light pipe support spacings are taken to the back of the mounting angles.
6. Provide future lamp housing brackets at even panel points 6 through 126.
7. Provide future lamp housing brackets at even panel points 8 through 104.
8. For mounting bracket removal procedures, see "Lighting Details No.3" sheet.

REGISTERED PROFESSIONAL ENGINEER Marwan N. Nader No. C 054426 Exp. 12/31/11 CIVIL STATE OF CALIFORNIA

FOR REVISIONS ONLY

CONTRACT CHANGE ORDER NO. _____
SHEET ___ OF ___

REQUESTS FOR INFORMATION NOT ADDRESSED IN THIS CCO REMAIN IN FORCE

ALL DIMENSIONS ARE IN MILLIMETERS UNLESS OTHERWISE SHOWN

R. Valizadeh/V. Toan/Y.L./W.L./F.C.
DESIGN OVERSIGHT
Rezo Valizadeh / Vong Toan / Y. Liu
SIGN OFF DATE 02/10/11

MARK	DATE	DESCRIPTIONS	BY	CH'D	CCO#
1	02/10/11	BRACKETS FOR FUTURE LIGHT PIPES	GB	MN	182

REVISIONS

	BY	CHECKED
DESIGN	G. Baker	T. Ho
DETAILS	M. Gulyas	T. Ho
QUANTITIES	C. Mauch	N. Vo

PREPARED FOR THE STATE OF CALIFORNIA DEPARTMENT OF TRANSPORTATION

R. Manzanarez
PROJECT ENGINEER

BRIDGE NO. 34-0006L/R
KILOMETER POST 13.2/13.9

SAN FRANCISCO OAKLAND BAY BRIDGE
EAST SPAN SEISMIC SAFETY PROJECT
SELF-ANCHORED SUSPENSION BRIDGE
(SUPERSTRUCTURE & TOWER)

LIGHTING DETAILS NO. 2

Rev. Date: 5-18-98

ORIGINAL SCALE IN MILLIMETERS FOR REDUCED PLANS 0 10 20 30 40 50 60 70 80 90 100

CU 04
EA 0120F1

DISREGARD PRINTS BEARING EARLIER REVISION DATES

REVISION DATES (PRELIMINARY STAGE ONLY) 01/15/99 05/15/99 08/05/99 05/17/01 04/08/02 01/04/02 12/19/02

SHEET 490R1 OF

FILE => I:\bb\04-012001\sas\contract plans and cco\cco\cco#182\update 02-10-11\dgn\aklht07.dgn

USERNAME => DWinrow DATE PLOTTED => 09 FEB 2011 TIME PLOTTED => 16:54:23

100% PS&E

DIST.	COUNTY	ROUTE	KILOMETER POST TOTAL PROJECT	SHEET NO.	TOTAL SHEETS
04	SF	80	13.2/13.9	907S1	1204

Caltrans Metric

REGISTERED ENGINEER - CIVIL

02-10-11

PLANS APPROVAL DATE

REGISTERED PROFESSIONAL ENGINEER Marwan N. Nader No. C 054426 Exp. 12/31/11 CIVIL STATE OF CALIFORNIA

The State of California or its officers or agents shall not be responsible for the accuracy or completeness of electronic copies of this plan sheet.

T.Y. LIN / MOFFATT & NICHOL
825 BATTERY STREET
SAN FRANCISCO, CA 94111

Caltrans now has a web site! To get to the web site, go to: http://www.dot.ca.gov

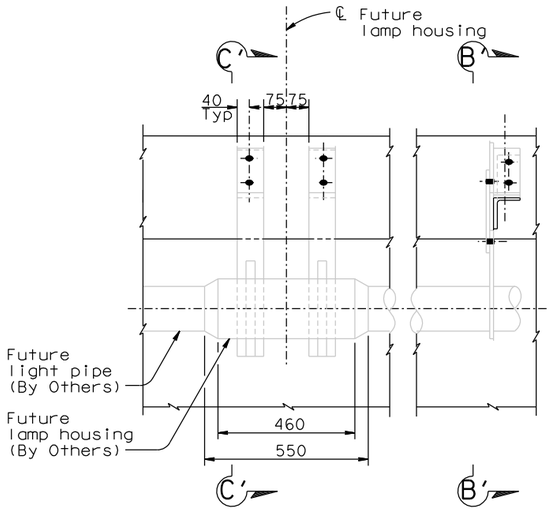

DETAIL A'
1:10

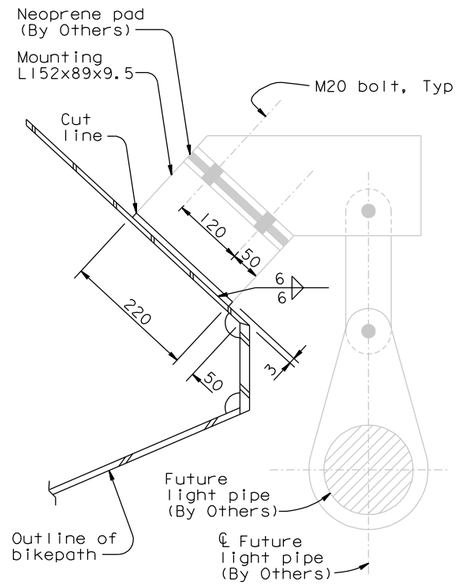

SECTION B'-B'
1:5

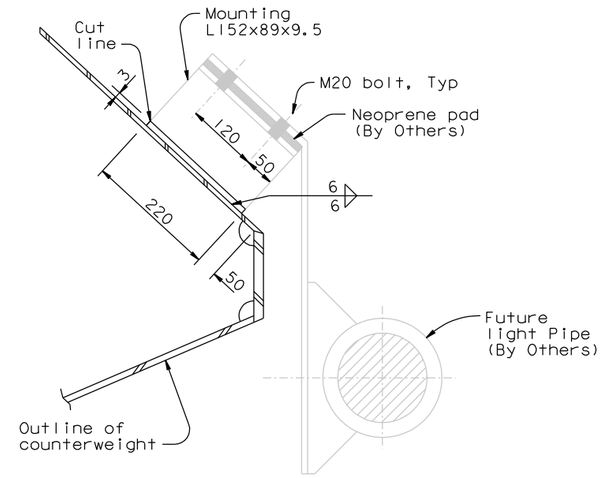

SECTION C'-C'
1:5

REMOVAL OF BRACKETS FOR FUTURE LIGHT PIPES

(See Bracket Removal Procedures)

BRACKET REMOVAL PROCEDURES:

1. Cut mounting bracket a distance of 3 mm from bikepath or counterweight, or as otherwise approved by the Engineer.
2. Grind angle down flush with bikepath or counterweight.
3. Clean and paint bikepath or counterweight.

CONTRACT CHANGE ORDER NO. _____
SHEET ____ OF ____

REQUESTS FOR INFORMATION NOT ADDRESSED IN THIS CCO REMAIN IN FORCE

ALL DIMENSIONS ARE IN MILLIMETERS UNLESS OTHERWISE SHOWN

R. Valizadeh/V. Toan/Y.L./W.L./F.C.
DESIGN OVERSIGHT
SIGN OFF DATE 02/10/11

MARK	DATE	DESCRIPTIONS	BY	CH'D	CCO#
0	02/10/11	BRACKETS FOR FUTURE LIGHT PIPES	JD	MN	182

REVISIONS

	BY	CHECKED
DESIGN	J. Duxbury	M. Nader
DETAILS	J. Duxbury	M. Nader
QUANTITIES	J. Duxbury	M. Nader

PREPARED FOR THE STATE OF CALIFORNIA DEPARTMENT OF TRANSPORTATION

R. Manzanarez
PROJECT ENGINEER

BRIDGE NO. 34-0006L/R
KILOMETER POST 13.2/13.9

SAN FRANCISCO OAKLAND BAY BRIDGE
EAST SPAN SEISMIC SAFETY PROJECT
SELF-ANCHORED SUSPENSION BRIDGE
(SUPERSTRUCTURE & TOWER)

LIGHTING DETAILS NO. 3

Rev. Date: 5-18-98

ORIGINAL SCALE IN MILLIMETERS FOR REDUCED PLANS 0 10 20 30 40 50 60 70 80 90 100

CU 04
EA 0120F1

DISREGARD PRINTS BEARING EARLIER REVISION DATES

REVISION DATES (PRELIMINARY STAGE ONLY) 02/10/11

SHEET 490S1 OF

FILE => I:\bb\04-012001\sas\contract plans and cco\cco\cco#182\update 02-10-11\dgn\akiht07a.dgn

USERNAME => DWinrow DATE PLOTTED => 09 FEB 2011 TIME PLOTTED => 16:55:39

100% PS&E