DIST.	COUNTY	ROUTE	KILOMETER POST TOTAL PROJECT	SHEET NO.	TOTAL SHEETS
04	SF	80	13.2/13.9	915R2	1204

Caltrans Metric

REGISTERED ENGINEER - CIVIL

12-6-04
PLANS APPROVAL DATE

REGISTERED PROFESSIONAL ENGINEER Alex E. Sanjines No. C 051153 Exp. 9/30/11 CIVIL STATE OF CALIFORNIA

The State of California or its officers or agents shall not be responsible for the accuracy or completeness of electronic copies of this plan sheet.

T.Y. LIN / MOFFATT & NICHOL
825 BATTERY STREET
SAN FRANCISCO, CA 94111

Caltrans now has a web site! To get to the web site, go to: http://www.dot.ca.gov

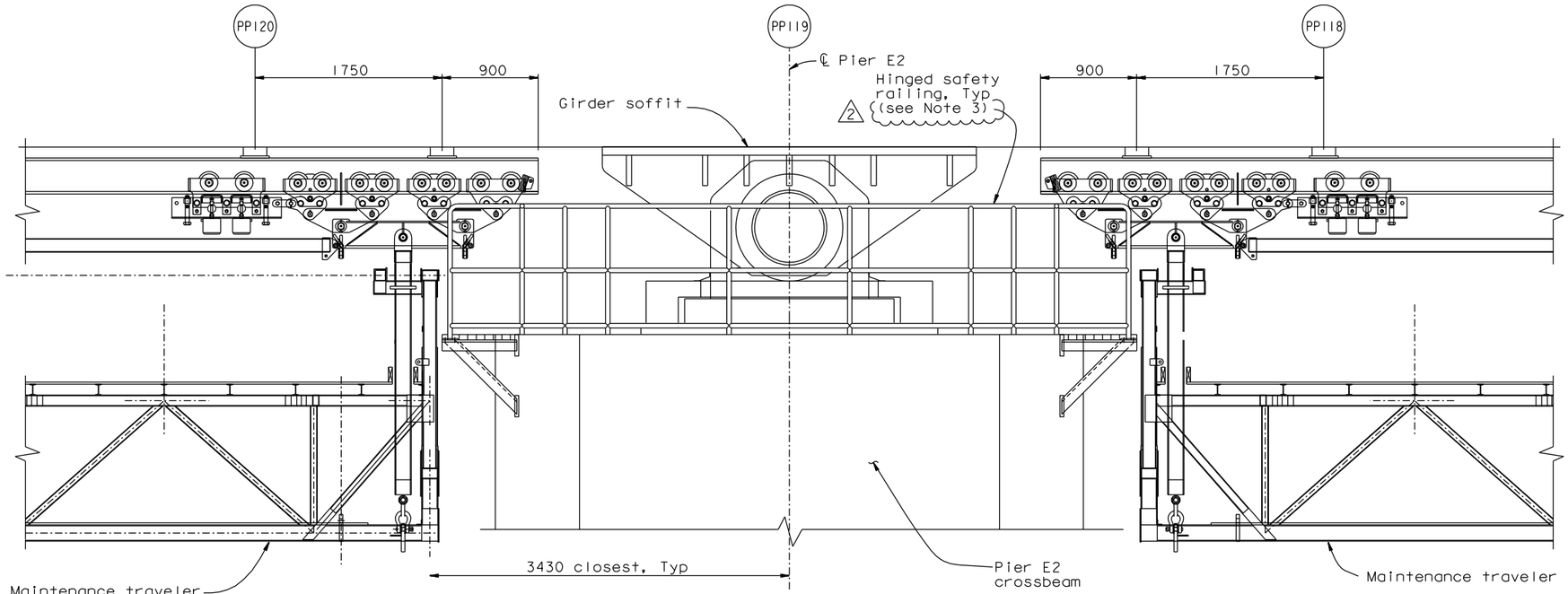

ELEVATION (Looking South)
1:25

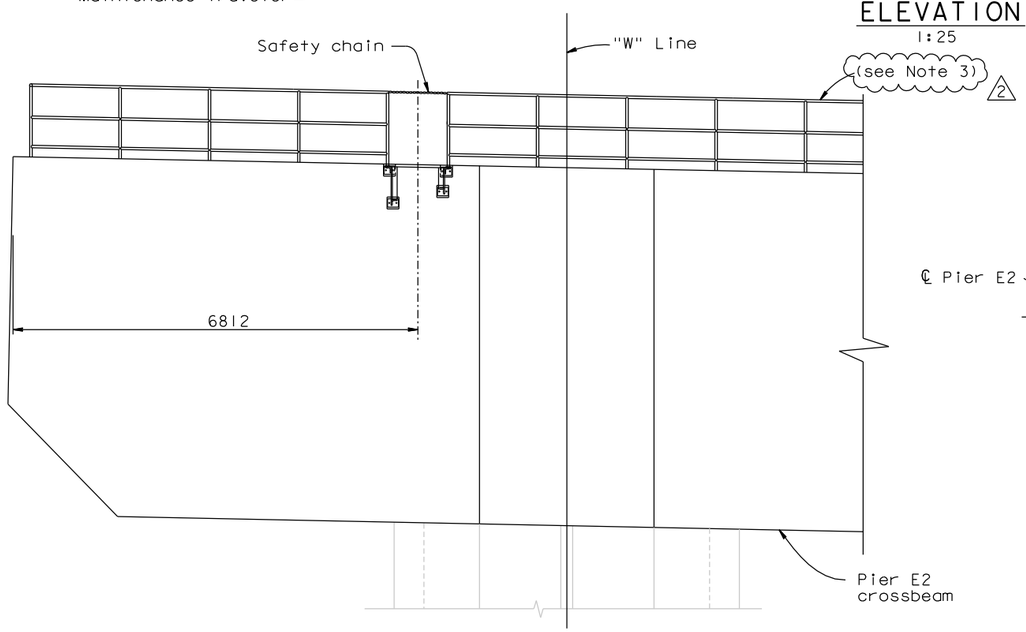

ELEVATION (Looking East)
1:50

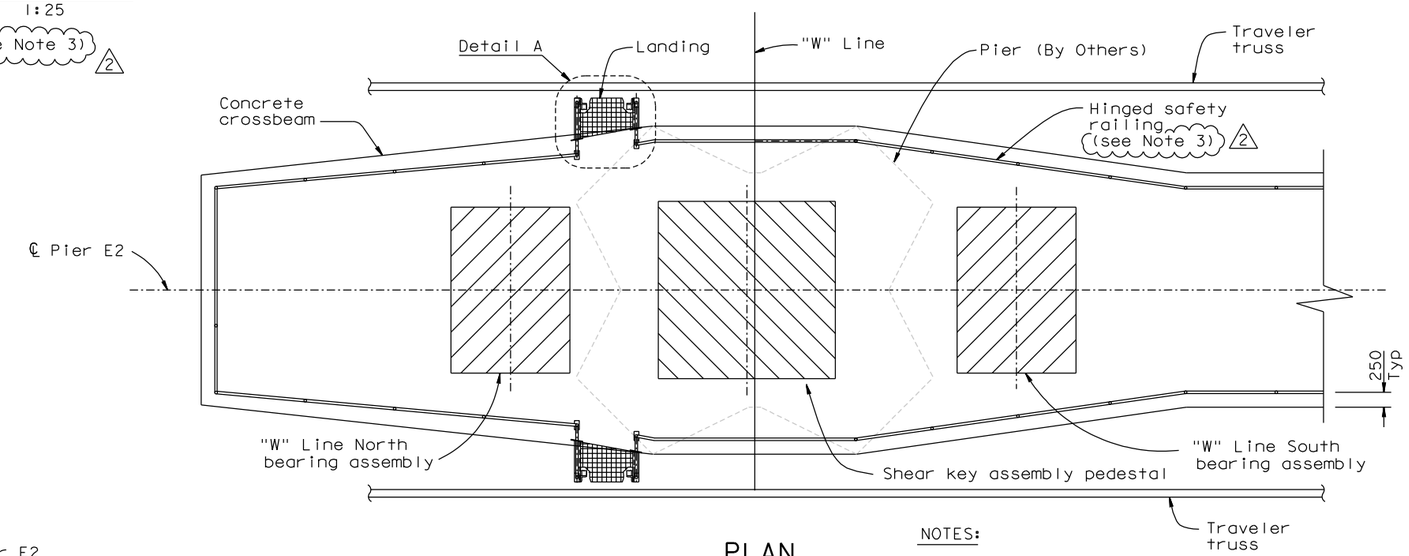

PLAN
1:50

NOTES:

1. For Detail A, see "Pier E2 Access Details No.2" sheet.
2. For typical hinged safety railing details, see "Revised Standard Plan RSP S11" sheet.
3. (2) Pier E2 Capbeam Safety Cable Alternate Plan may be used, see "Pier E2 Access Details No.3" sheet.

CONTRACT CHANGE ORDER NO. _____
SHEET ____ OF ____

REQUESTS FOR INFORMATION NOT ADDRESSED IN THIS CCO REMAIN IN FORCE

ALL DIMENSIONS ARE IN MILLIMETERS UNLESS OTHERWISE SHOWN

R. Valizadeh/V. Toan/Y.L./W.L./F.C.
DESIGN OVERSIGHT
SIGN OFF DATE 02/01/11

MARK	DATE	DESCRIPTIONS	BY	CH'D	CCO#
2	02/01/11	PIER E2 CAPBEAM SAFETY CABLE	CC	AS	181
1	06/12/09	HANDRAIL	TH	AS	114

REVISIONS

DESIGN	BY A. Sanjines	CHECKED T. Ho	
DETAILS	BY R. Xu	CHECKED N. Vo	
QUANTITIES	BY A. Sanjines	CHECKED N. Vo	

PREPARED FOR THE STATE OF CALIFORNIA DEPARTMENT OF TRANSPORTATION

R. Manzanarez
PROJECT ENGINEER

BRIDGE NO. 34-0006L/R
KILOMETER POST 13.2/13.9

SAN FRANCISCO OAKLAND BAY BRIDGE
EAST SPAN SEISMIC SAFETY PROJECT
SELF-ANCHORED SUSPENSION BRIDGE
(SUPERSTRUCTURE & TOWER)

PIER E2 ACCESS DETAILS NO.1

Rev. Date: 5-18-98

ORIGINAL SCALE IN MILLIMETERS FOR REDUCED PLANS 0 10 20 30 40 50 60 70 80 90 100

CU 04
EA 0120F1

DISREGARD PRINTS BEARING EARLIER REVISION DATES → 08/02/99 05/31/01 04/08/02 07/09/02 12/19/02 12/07/05

SHEET 498R2 OF

FILE => I:\bb\04-012001\sas\contract plans and cco\cco\cco#181\1-original 02-01-11\dgn\akacc11.dgn

100% PS&E

USERNAME => arivera DATE PLOTTED => 01 FEB 2011 TIME PLOTTED => 12:09:16