DIST.	COUNTY	ROUTE	KILOMETER POST TOTAL PROJECT	SHEET NO.	TOTAL SHEETS
04	SF, Ala	80	13.9/14.3, 0.0/2.7	1164S13	1204

Caltrans Metric

REGISTERED ENGINEER - CIVIL

05-17-11
PLANS APPROVAL DATE

REGISTERED PROFESSIONAL ENGINEER Tien Hung Ho No. C 43990 Exp. 06/30/11 CIVIL STATE OF CALIFORNIA

The State of California or its officers or agents shall not be responsible for the accuracy or completeness of electronic copies of this plan sheet.

T.Y. LIN / MOFFATT & NICHOL
TWO HARRISON STREET
SAN FRANCISCO, CA 94105

Caltrans now has a web site! To get to the web site, go to: http://www.dot.ca.gov

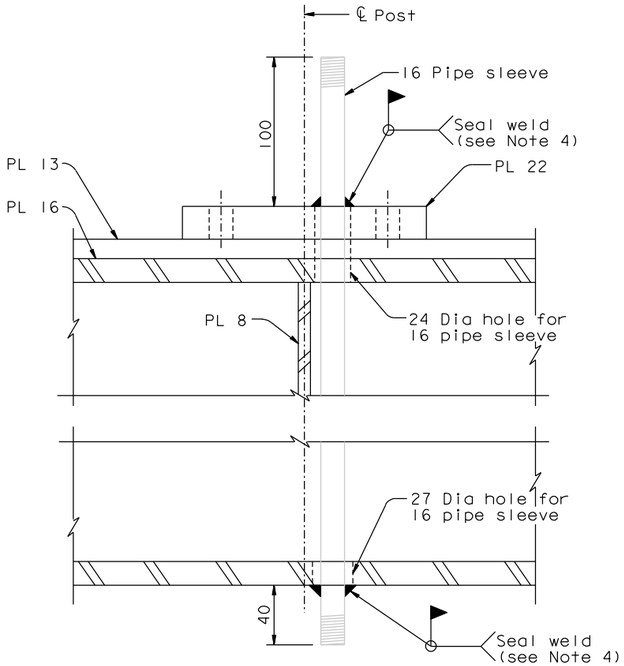

CONDITION 1

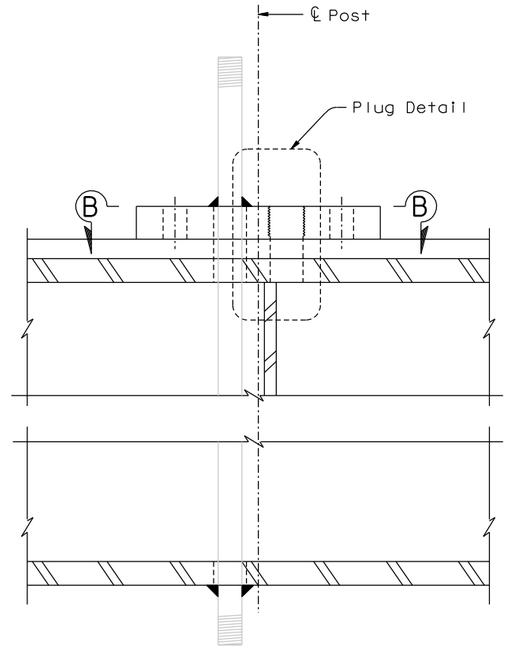

CONDITION 2

SECTION A-A
1:2

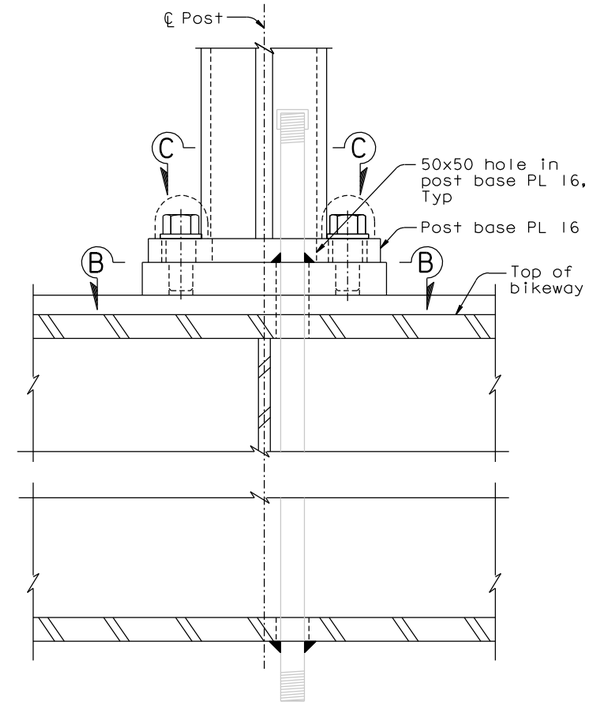

FINAL CONDITION (Condition 1 shown; Condition 2 similar)

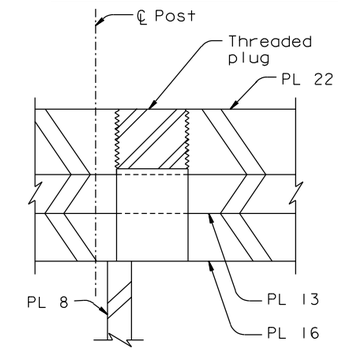

PLUG DETAIL
1:1

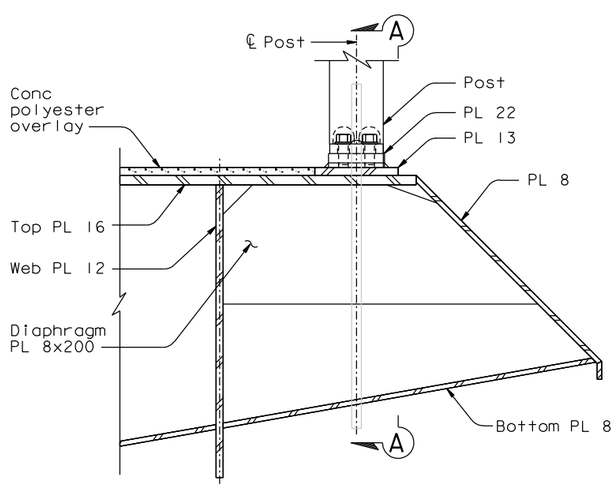

SKYWAY BIKEPATH PANEL DETAIL
1:5

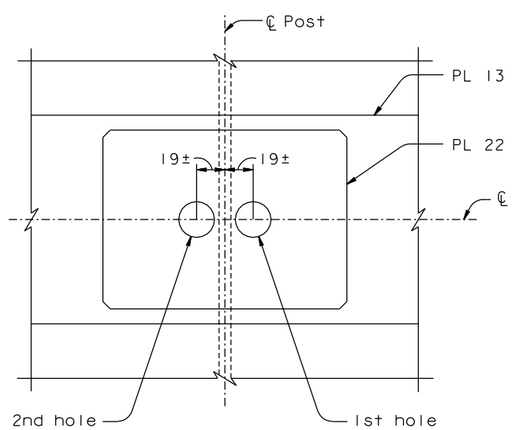

SECTION B-B
1:2

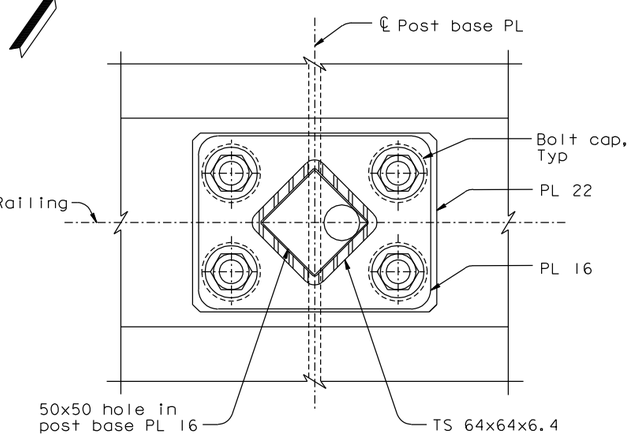

SECTION C-C
1:2

PROCEDURE FOR DRILLING EXPLORATION HOLES:

1. Mark the centerlines of the post and the railing on the PL 22, prior to removal of railing divider.
2. Remove bikepath railing divider @ panel joint by removing bolt caps, bolts and all shims.
3. Drill a 24 mm (15/16") hole through the PL 22, PL 13 and Top PL 16 and centered 19± mm east of the centerline of the post base PL. If no obstruction is encountered, drill a 27 mm (1-1/16") hole through the Bottom PL 8.
4. Install pipe sleeve and seal weld to top and bottom plates. Galvanized surfaces shall be repaired after seal welding. Areas with damaged paint or with no paint shall be cleaned and painted. Go to step #9.
5. If obstruction is encountered, check the hole to establish the diaphragm location.
6. Move to 19± mm west of the centerline of the post base PL and repeat step #3.
7. At the conclusion of the day, all holes shall be temporarily plugged to the satisfaction of the Engineer.
8. Plug 1st hole using Plug Detail.
9. Cut 50x50 hole in post base PL 16.
10. Lower divider rail to check fit.

CONTRACT CHANGE ORDER NO. _____
SHEET ____ OF ____

REQUESTS FOR INFORMATION NOT ADDRESSED IN THIS CCO REMAIN IN FORCE

100 % PS&E

USERNAME => orivera DATE PLOTTED => 17 MAY 2011 TIME PLOTTED => 12:54:55

W. Long, Y. Liu
DESIGN OVERSIGHT
Wenji Long / Y Liu
SIGN OFF DATE 05/17/11

MARK	DATE	DESCRIPTIONS	BY	CH'D	CCO#
0	05/17/11	SKYWAY BIKEPATH RAILING MODIFICATIONS	JD	TH	179

REVISIONS

	BY	CHECKED
DESIGN	T. Ho	J. Duxbury
DETAILS	T. Ho	J. Duxbury
QUANTITIES	T. Ho	J. Duxbury

PREPARED FOR THE STATE OF CALIFORNIA DEPARTMENT OF TRANSPORTATION

R. Manzanarez
PROJECT ENGINEER

BRIDGE NO. 34-0006 L/R
KILOMETER POST 13.9/14.3, 0.0/2.7

SAN FRANCISCO OAKLAND BAY BRIDGE
EAST SPAN SEISMIC SAFETY PROJECT

SKYWAY CLEANUP ITEMS

BIKEPATH DIVIDER RAIL CONDUIT ROUTING

Rev. Date: 5-18-98

ORIGINAL SCALE IN MILLIMETERS FOR REDUCED PLANS 0 10 20 30 40 50 60 70 80 90 100

CU 04
EA 0120F1

DISREGARD PRINTS BEARING EARLIER REVISION DATES 05/17/11

REVISION DATES (PRELIMINARY STAGE ONLY)

SHEET 747S13 OF

FILE => I:\bb\04-01200I\sas\contract plans and cco\cco\cco#179\3-update 05-17-11\dgn\04-0120f1-u-bkconrtg01.dgn