DIST.	COUNTY	ROUTE	KILOMETER POST TOTAL PROJECT	SHEET NO.	TOTAL SHEETS
04	SF, Ala	80	13.9/14.3, 0.0/2.7	1164S12	1204

Caltrans Metric

REGISTERED ENGINEER - CIVIL

05-13-11
PLANS APPROVAL DATE

REGISTERED PROFESSIONAL ENGINEER A.L. Ely No. C 18880 Exp. 06/30/11 CIVIL STATE OF CALIFORNIA

The State of California or its officers or agents shall not be responsible for the accuracy or completeness of electronic copies of this plan sheet.

T.Y. LIN / MOFFATT & NICHOL
TWO HARRISON STREET
SAN FRANCISCO, CA 94105

Caltrans now has a web site! To get to the web site, go to: http://www.dot.ca.gov

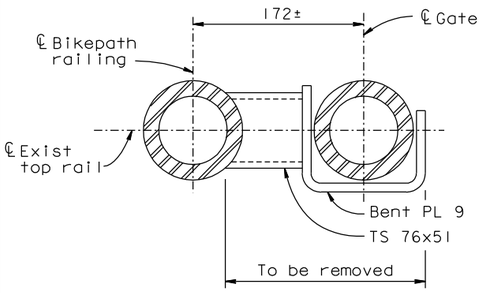

EXISTING GATE RETAINER (2 each gate)
1:3

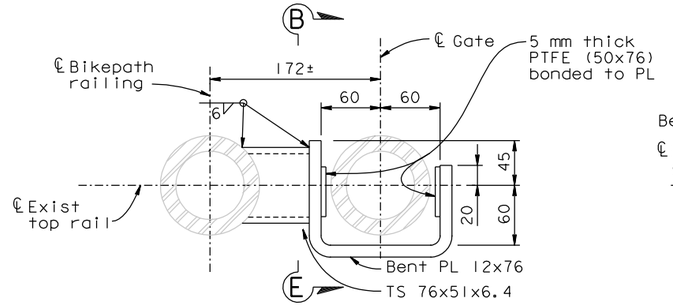

NEW GATE RETAINER
1:3
(2 require each gate at same location as Exist gate retainers)

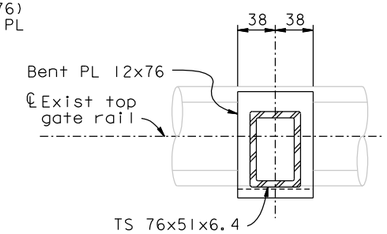

SECTION B-B
1:3

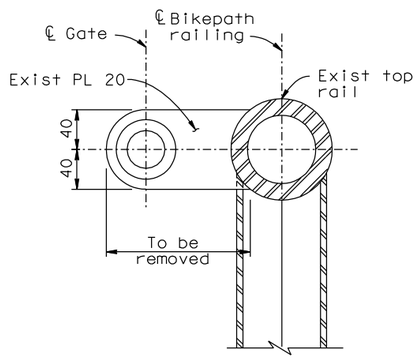

EXISTING GATE LATCH PLATE (2 each gate)
1:3

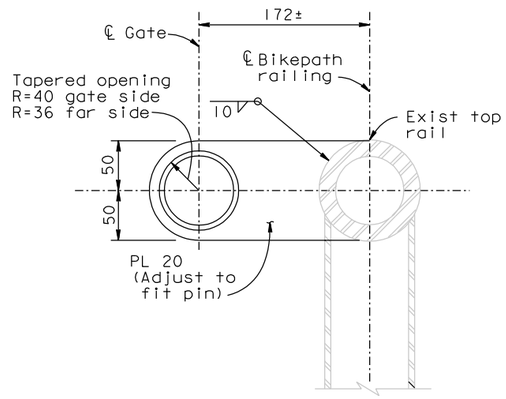

NEW GATE LATCH PLATE
1:3
(2 require each gate at same location as Exist gate latch plates)

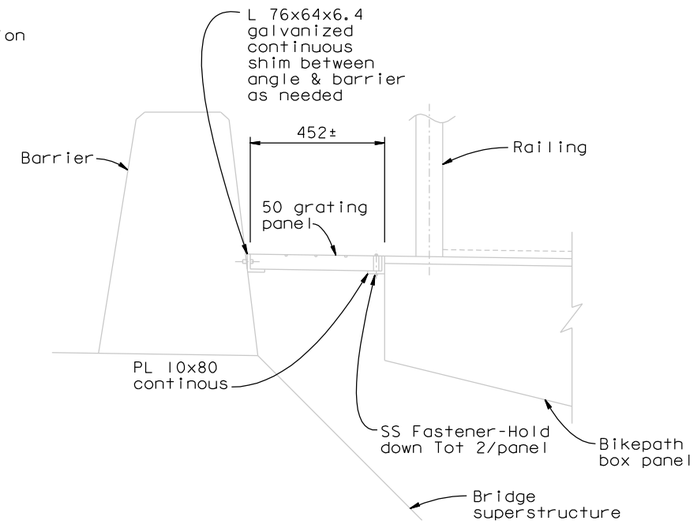

SECTION

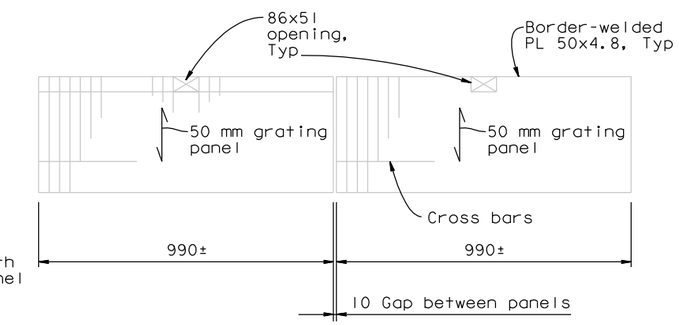

PANEL DETAIL

EXISTING GRATING DETAILS
1:10

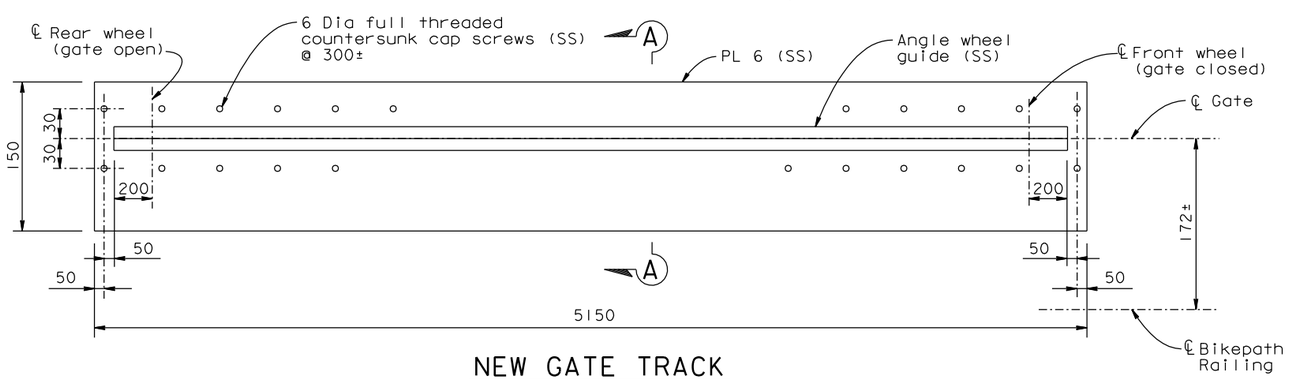

NEW GATE TRACK
No Scale

NOTES:

1. The Contractor shall verify all controlling field dimensions before ordering or fabricating any material or performing any work that might thereby be affected.
2. For Section A-A, see "Bike Path Emergency Gate Details No. 1" sheet.
3. All material to be galvanized after fabrication.
4. 50 Grating panel bearing bars 50x4.8 at 30.
5. Cross bars at 102.
6. Notch the grating border plate at the locations of drilled inserts.

CONTRACT CHANGE ORDER NO. ____
SHEET ___ OF ___

REQUESTS FOR INFORMATION NOT ADDRESSED IN THIS CCO REMAIN IN FORCE

MARK	DATE	DESCRIPTIONS	BY	CH'D	CCO#
0	05/13/11	SKYWAY BIKEPATH RAILING MODIFICATIONS	AE	JB	179

REVISIONS

W. Long, Y. Liu
DESIGN OVERSIGHT
Wenyi Long / Y Liu
SIGN OFF DATE 05/13/11

Rev. Date: 5-18-98

	BY	CHECKED
DESIGN	J. Birdy	A. L. Ely
DETAILS	J. Birdy	A. L. Ely
QUANTITIES	J. Birdy	A. L. Ely

PREPARED FOR THE STATE OF CALIFORNIA DEPARTMENT OF TRANSPORTATION

R. Manzanarez
PROJECT ENGINEER

BRIDGE NO. 34-0006 L/R
KILOMETER POST 13.9/14.3, 0.0/2.7

SAN FRANCISCO OAKLAND BAY BRIDGE
EAST SPAN SEISMIC SAFETY PROJECT

SKYWAY CLEANUP ITEMS

BIKEPATH EMERGENCY GATE DETAILS NO. 2

ORIGINAL SCALE IN MILLIMETERS FOR REDUCED PLANS 0 10 20 30 40 50 60 70 80 90 100

CU 04
EA 0120F1

DISREGARD PRINTS BEARING EARLIER REVISION DATES 05/13/11

REVISION DATES (PRELIMINARY STAGE ONLY)

SHEET 747S12 OF

FILE => I:\bb\04-012001\sas\contract plans and cco\cco\cco#179\2-revision 05-13-11\dgn\04-0120f1-u-bkemerdet02.dgn

100% PS&E

USERNAME => DWinrow DATE PLOTTED => 13 MAY 2011 TIME PLOTTED => 14:40:39

October 26, 2010