DIST.	COUNTY	ROUTE	KILOMETER POST TOTAL PROJECT	SHEET NO.	TOTAL SHEETS
04	SF, Ala	80	13.9/14.3, 0.0/2.7	1164S5	1204

Caltrans Metric

REGISTERED ENGINEER - CIVIL

03-28-11
PLANS APPROVAL DATE

REGISTERED PROFESSIONAL ENGINEER
Tien Hung Ho
No. C 43990
Exp. 06/30/11
CIVIL
STATE OF CALIFORNIA

The State of California or its officers or agents shall not be responsible for the accuracy or completeness of electronic copies of this plan sheet.

T.Y. LIN / MOFFATT & NICHOL
TWO HARRISON STREET
SAN FRANCISCO, CA 94105

Caltrans now has a web site! To get to the web site, go to: http://www.dot.ca.gov

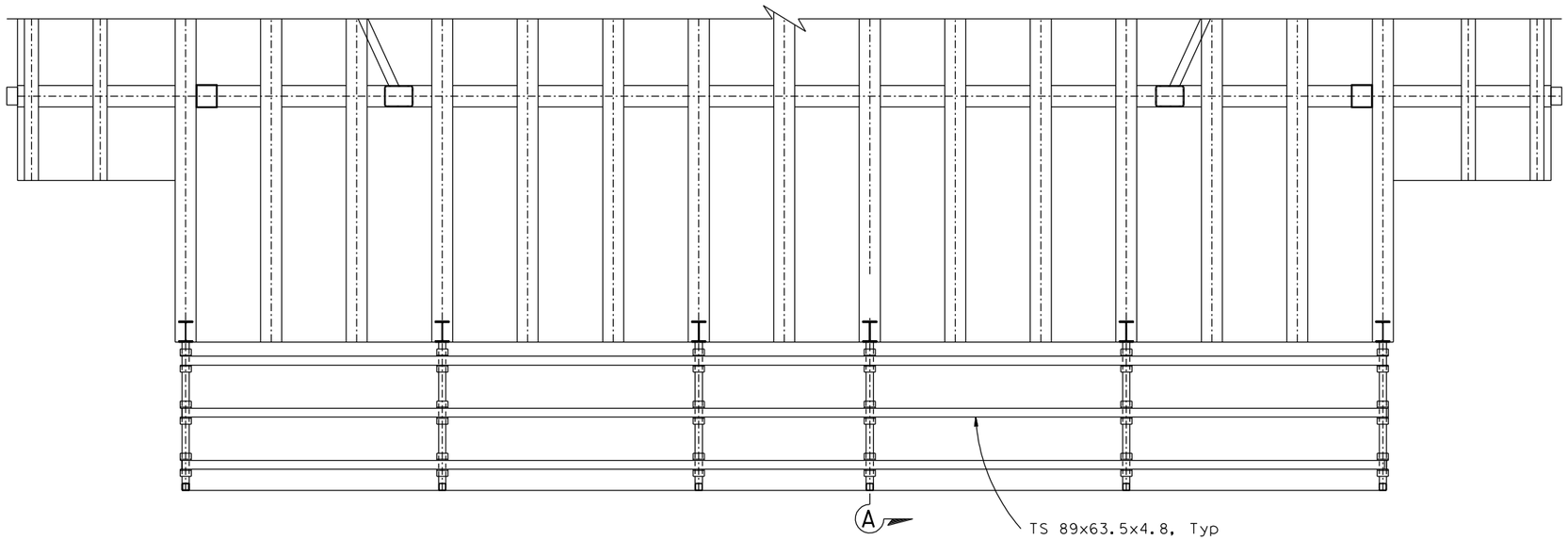

PARTIAL PLAN
1:20

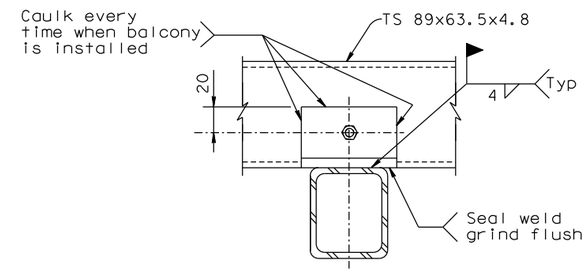

SECTION B-B
1:2.5

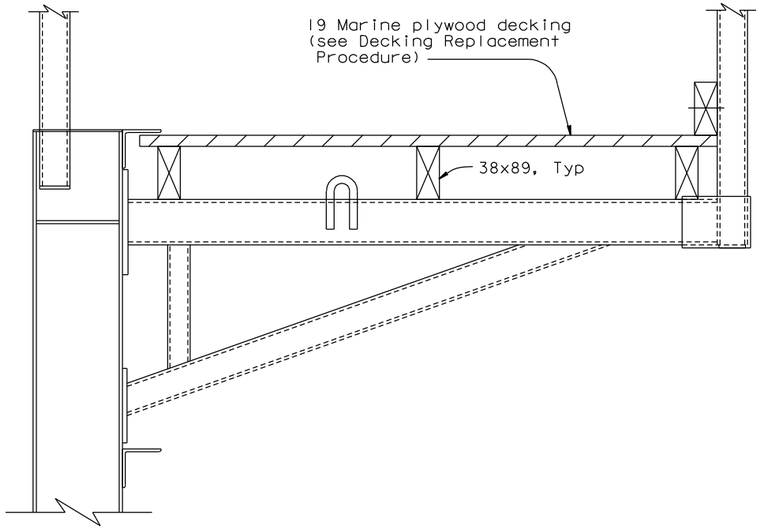

EXISTING BIKEPATH TRAVELER BELVEDERE BALCOND DECKING
1:5

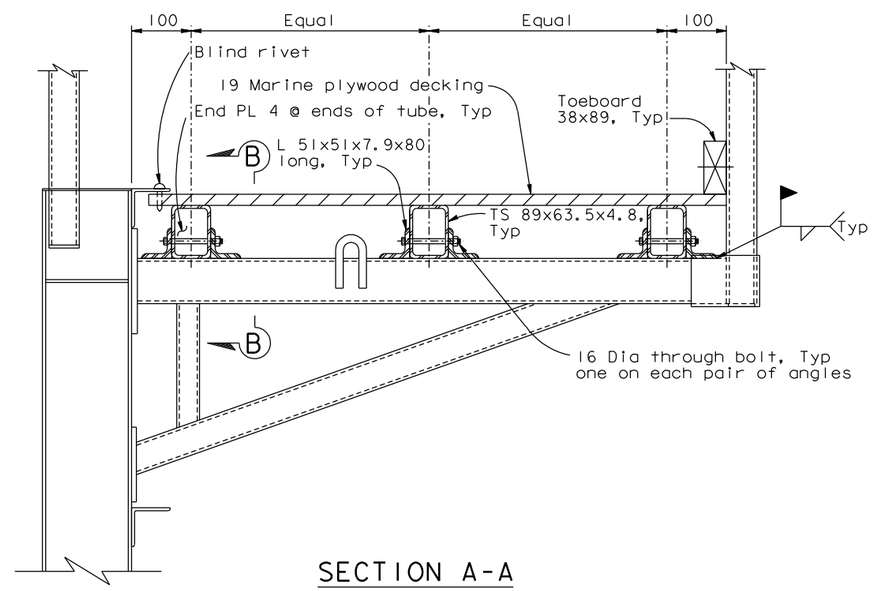

SECTION A-A
NEW BIKEPATH TRAVELER BELVEDERE BALCONY DECKING
1:5

DECKING REPLACEMENT PROCEDURE:

1. Remove Marine plywood and 38x89 lumber.
2. Install structural angles and tubing. Tube sections to be ASTM A500 Grade C or ASTM A300 Grade B with mill certificates satisfying Grade C Fy & Fu, subject to review and approval of the Engineer. Angles to be ASTM A572 Grade 42 or ASTM A709 Grade 345.
3. Bolts
   a) All bolts to be ASTM grade A325, unless noted otherwise
   b) Fabricator is to supply a nut and one hardened washer with each bolt unless noted otherwise.
   c) All bolts, nuts, and washers are to be galvanized.
   d) All 16 Dia bolts shall be imperial (5/8 inch) size.
4. Install new plywood decking and toeboard. Plywood decking shall conform to or exceed the requirements of U.S. Product Standard PS-1-9S for APA Structural 1 AB Marine Grade. Plywood shall be pressure treated. Plywood decking shall be painted on all sides. Wooden toeboards shall be pressure treated S4S Douglas Fir. Toeboards shall be painted on all sides.
5. Plywood decking shall be attached using blind rivets. Blind rivets shall be stainless steel, 4.8 mm diameter and shall be installed at 305 mm maximum on center.
6. Areas with damaged paint or with no paint shall be cleaned and painted. Any damage to the galvanized surfaces shall be repaired with zinc rich primer. Galvanized surfaces shall be finish painted.

NOTES:

1. Total units: 2 travelers.
2. Contractor shall field verify all dimensions.

100% PS&E

CONTRACT CHANGE ORDER NO. _____
SHEET ____ OF ____

REQUESTS FOR INFORMATION NOT ADDRESSED IN THIS CCO REMAIN IN FORCE

ALL DIMENSIONS ARE IN MILLIMETERS UNLESS OTHERWISE SHOWN

SAN FRANCISCO OAKLAND BAY BRIDGE
EAST SPAN SEISMIC SAFETY PROJECT

SKYWAY CLEANUP ITEMS
TRAVELER DECKING REPLACEMENT

W. Long, Y. Liu
DESIGN OVERSIGHT
Wenyi Long / Y Liu
SIGN OFF DATE 03/28/11

MARK	DATE	DESCRIPTIONS	BY	CH'D	CCO#
0	03/28/11	SKYWAY BIKEPATH TRAVELER COMPLETION WORK	TH	JD	178

REVISIONS

	BY	CHECKED
DESIGN	T. Ho	J. Duxbury
DETAILS	T. Ho	J. Duxbury
QUANTITIES	T. Ho	J. Duxbury

PREPARED FOR THE STATE OF CALIFORNIA DEPARTMENT OF TRANSPORTATION

R. Manzanarez
PROJECT ENGINEER

BRIDGE NO. 34-0006L/R
KILOMETER POST 13.9/14.3, 0.0/2.7

Rev. Date: 5-18-98

ORIGINAL SCALE IN MILLIMETERS FOR REDUCED PLANS 0 10 20 30 40 50 60 70 80 90 100

CU 04
EA 0120F1

DISREGARD PRINTS BEARING EARLIER REVISION DATES 03/28/11

REVISION DATES (PRELIMINARY STAGE ONLY)

SHEET 747S5 OF

FILE => I:\bb\04-012001\sas\contract plans and cco\cco\cco#178\1-original 03-28-11\dgn\aktpd06-2.dgn

USERNAME => DWinrow