DIST.	COUNTY	ROUTE	KILOMETER POST TOTAL PROJECT	SHEET NO.	TOTAL SHEETS
04	SF, Ala	80	13.9/14.3, 0.0/2.7	1164S3	1204

REGISTERED ENGINEER - CIVIL

03-28-11
PLANS APPROVAL DATE

REGISTERED PROFESSIONAL ENGINEER Tien Hung Ho No. C 43990 Exp. 06/30/11 CIVIL STATE OF CALIFORNIA

The State of California or its officers or agents shall not be responsible for the accuracy or completeness of electronic copies of this plan sheet.

T.Y. LIN / MOFFATT & NICHOL
TWO HARRISON STREET
SAN FRANCISCO, CA 94105

Caltrans now has a web site! To get to the web site, go to: http://www.dot.ca.gov

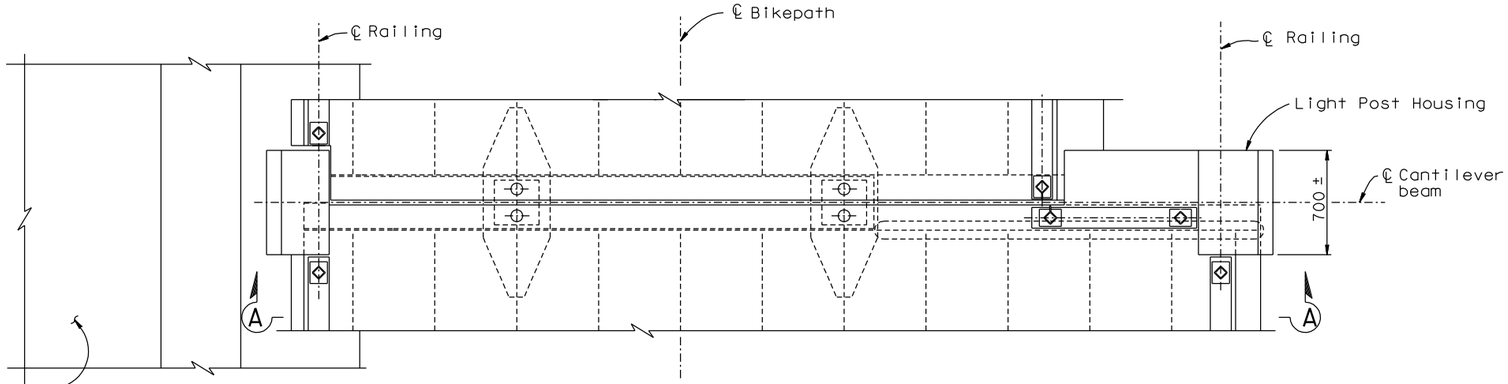

SKYWAY BIKEPATH AT BELVEDERE

1:20

(Top plan view)
(East side shown
West side similar)

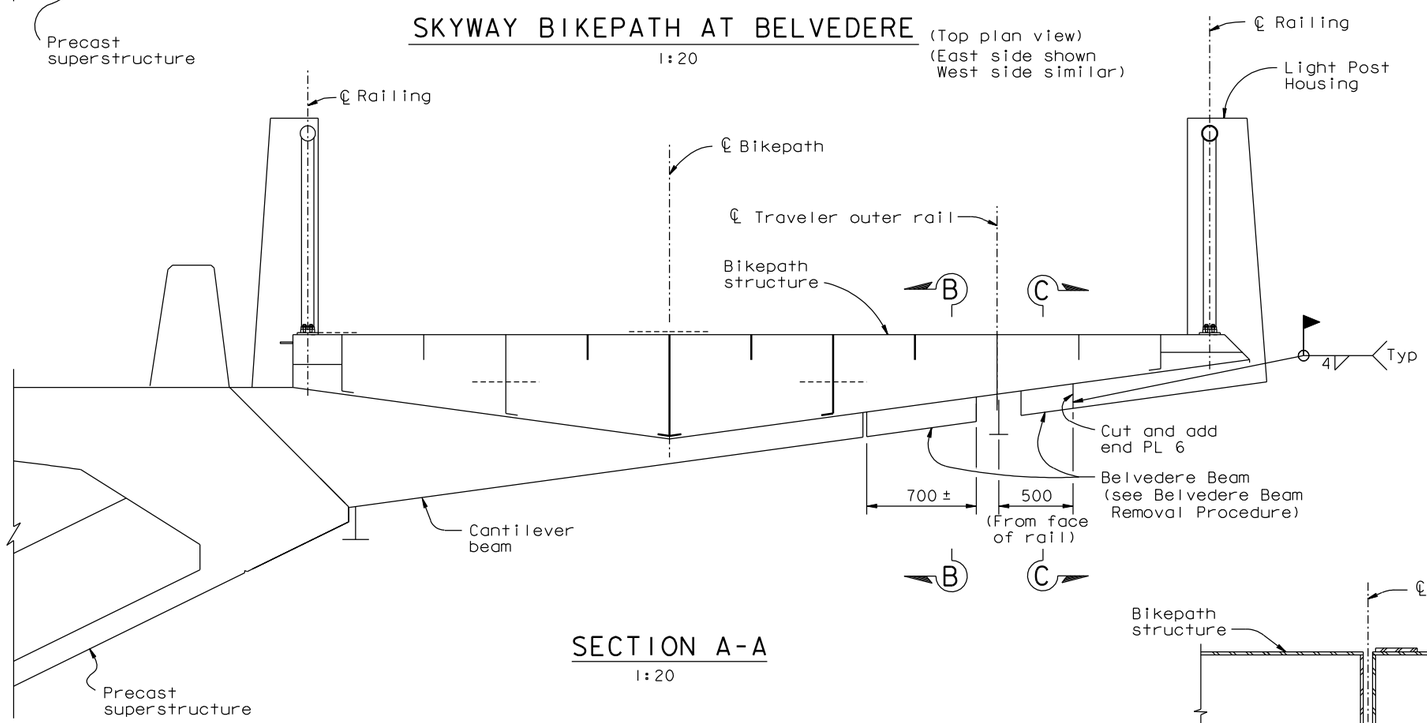

SECTION A-A

1:20

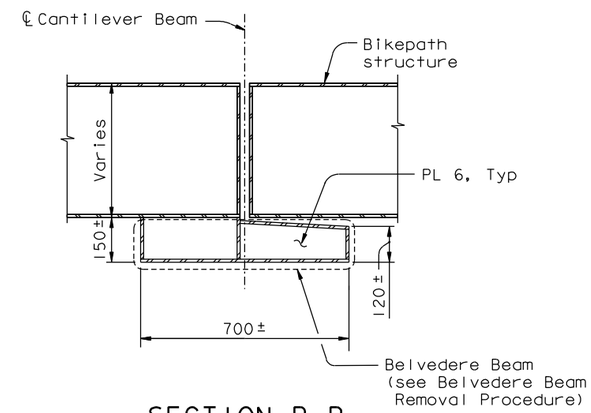

SECTION B-B

1:10

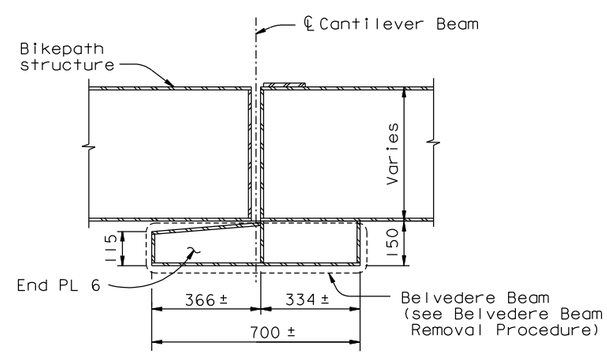

SECTION C-C

1:10

BELVEDERE BEAM REMOVAL PROCEDURE:

1. Install protective cover on traveler rail.
2. Remove portions of Belvedere Beam. Cut line shall be 10 mm away from the permanent structure or as otherwise approved by the Engineer.
3. Removal of steel shall not damage the remainder of the steel structure materials.
4. Steel surface shall be ground flush and damaged areas shall be repaired in accordance with the requirements of ANSI/AASHTO/AWS D1.5.
5. Cover opening in Belvedere Beam with an end PL 6. The edges of beam shall be squared, plumb and ground smooth prior to welding end PL.
6. Areas with damaged paint or with no paint shall be cleaned and painted.

NOTES:

1. 2 existing Belvedere Beams shall be removed at Pier 4E, 6E, 8E, 10E and 12E.
2. Contractor shall field verify all dimensions.

100 % PS&E

CONTRACT CHANGE ORDER NO. _____
SHEET ____ OF ____

REQUESTS FOR INFORMATION NOT ADDRESSED IN THIS CCO REMAIN IN FORCE

ALL DIMENSIONS ARE IN MILLIMETERS UNLESS OTHERWISE SHOWN

W. Long, Y. Liu
DESIGN OVERSIGHT
Wenyi Long / Y Liu
SIGN OFF DATE 03/28/11

MARK	DATE	DESCRIPTIONS	BY	CH'D	CCO#
0	03/28/11	SKYWAY BIKEPATH TRAVELER COMPLETION WORK	TH	JD	178

REVISIONS

	BY	CHECKED
DESIGN	T. Ho	J. Duxbury
DETAILS	T. Ho	J. Duxbury
QUANTITIES	T. Ho	J. Duxbury

PREPARED FOR THE STATE OF CALIFORNIA DEPARTMENT OF TRANSPORTATION

R. Manzanarez
PROJECT ENGINEER

BRIDGE NO. 34-0006L/R
KILOMETER POST 13.9/14.3, 0.0/2.7

SAN FRANCISCO OAKLAND BAY BRIDGE
EAST SPAN SEISMIC SAFETY PROJECT

SKYWAY CLEANUP ITEMS

BELVEDERE BEAM REMOVAL

Rev. Date: 5-18-98

ORIGINAL SCALE IN MILLIMETERS FOR REDUCED PLANS 0 10 20 30 40 50 60 70 80 90 100

CU 04
EA 0120F1

DISREGARD PRINTS BEARING EARLIER REVISION DATES 03/28/11

REVISION DATES (PRELIMINARY STAGE ONLY)

SHEET 747S3 OF

FILE => I:\bb\04-012001\sas\contract plans and cco\cco\cco#178\1-original 03-28-11\dgn\akbwd01a.dgn

USERNAME => DWinrow